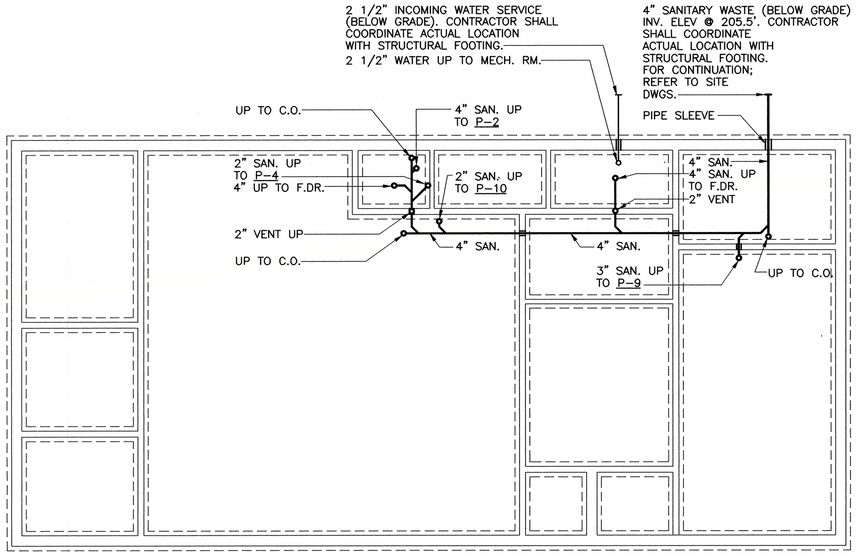

GARAGE – FOUNDATION PLAN

SCALE: 1/8" = 1'-0"

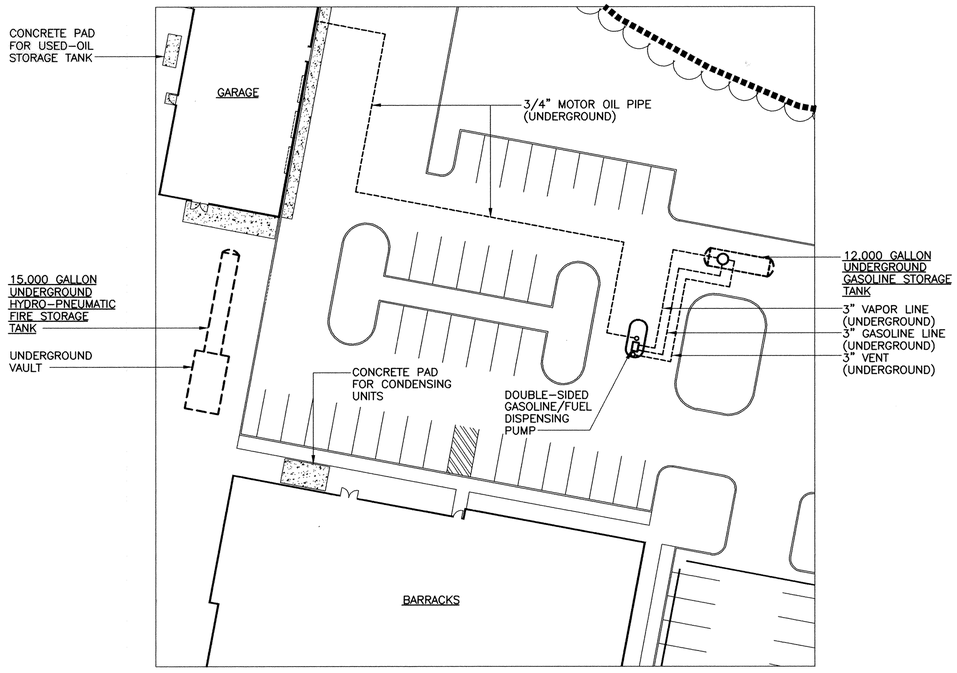

PARTIAL SITE PLAN

SCALE: 1" = 30'-0"

NOTES:

1. FOR DETAILS OF UNDERGROUND VAULT; REFER TO DRAWING No. M-11.

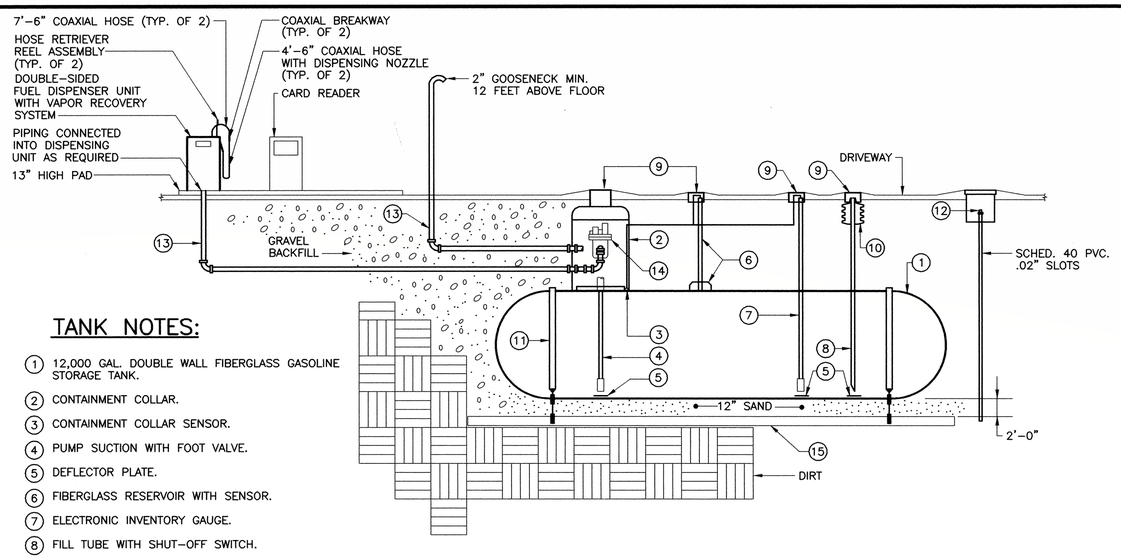

TANK NOTES:

1. 12,000 GAL. DOUBLE WALL FIBERGLASS GASOLINE STORAGE TANK.
2. CONTAINMENT COLLAR.
3. CONTAINMENT COLLAR SENSOR.
4. PUMP SUCTION WITH FOOT VALVE.
5. DEFLECTOR PLATE.
6. FIBERGLASS RESERVOIR WITH SENSOR.
7. ELECTRONIC INVENTORY GAUGE.
8. FILL TUBE WITH SHUT-OFF SWITCH.
9. WATERTIGHT MANHOLE.
10. OVERFILL SPILL CONTAINER.
11. HOLD DOWN STRIP WITH TURNBUCKLE.
12. VAPOR MONITORING WELL (TYP. OF 2)
13. DOUBLE WALL, FIBERGLASS PIPE AND FITTINGS BY "EMERON" MIN. 18" BURIAL DEPTH OR AS RECOMMENDED BY MFR.
14. SUBMERSIBLE PUMP RATED FOR 10 GPM. AT 65 FT. HD., 1/3 HP., 120V. 1ø.
15. 30 FT. x 10 FT. x 20" DEEP CONCRETE PAD WITH #6 REBARS AT 12" CENTERS EACHWAY, PAD DESIGN AND SIZE MAY VARY AS RECOMMENDED BY TANK MANUFACTURER.

GASOLINE PRODUCT PUMPING STATION AND STORAGE TANK

NOT TO SCALE:

SCALE: 1" = 30'-0"

30 0 30 60

SCALE: 1/8" = 1'-0"

8 0 8 16

FOR REFERENCE ONLY
DGS# PH-582-232-002
HVAC Upgrades, MSP
Barrack -H-
AUGUST 2023

DEPARTMENT OF STATE POLICE

CAPITAL PROJECT OFFICER — DATE 11-4-98

DEPARTMENT OF GENERAL SERVICES APPROVAL

PROJECT ADMINISTRATOR — DATE 10/30/98

DIRECTOR, ENGR. AND CONST. — DATE 11/6/98

NO.	DATE	REVISIONS

Construction of New Police Barrack
Maryland State Police, Barrack H
LaPlata, Maryland
~~D.G.S Project # PH 000 971 001~~

S.C. Burdette & Associates — Public Safety Consultant
2123 Maryland Avenue
Baltimore, Maryland 21218
(410) 547-6636

Carroll Engineering, Inc. — Civil Structural Engineers
61 Padonia Road, East, Suite C
Timonium, Maryland 21093
(410) 252-6211

Gipe Associates — Mechanical Electrical Engineers
Dulaney Center I, Suite 102
849 Fairmount Avenue
Baltimore, Maryland 21286
(410) 832-2420

Mahan Rykiel Associates — Landscape Architects
1330 Smith Avenue
Baltimore, Maryland 21209
(410) 435-1700

Communities Charles Associates
923 N. Calvert Street
Baltimore, Maryland 21202
TEL 410.752.3720
FAX 410.752.4823

DRAWING TITLE:
GARAGE FOUNDATION PLAN AND PARTIAL SITE PLAN

STATE OF MARYLAND — MICHAEL JOHN PIRRUNG — NO. 19584 — REGISTERED PROFESSIONAL ENGINEER

PROJECT NO: 9757
DATE: 10-7-98
REVISIONS:
DRAWING NO: M-7

MJP 97185M7.DWG
PCG 10/05/98
5-2336

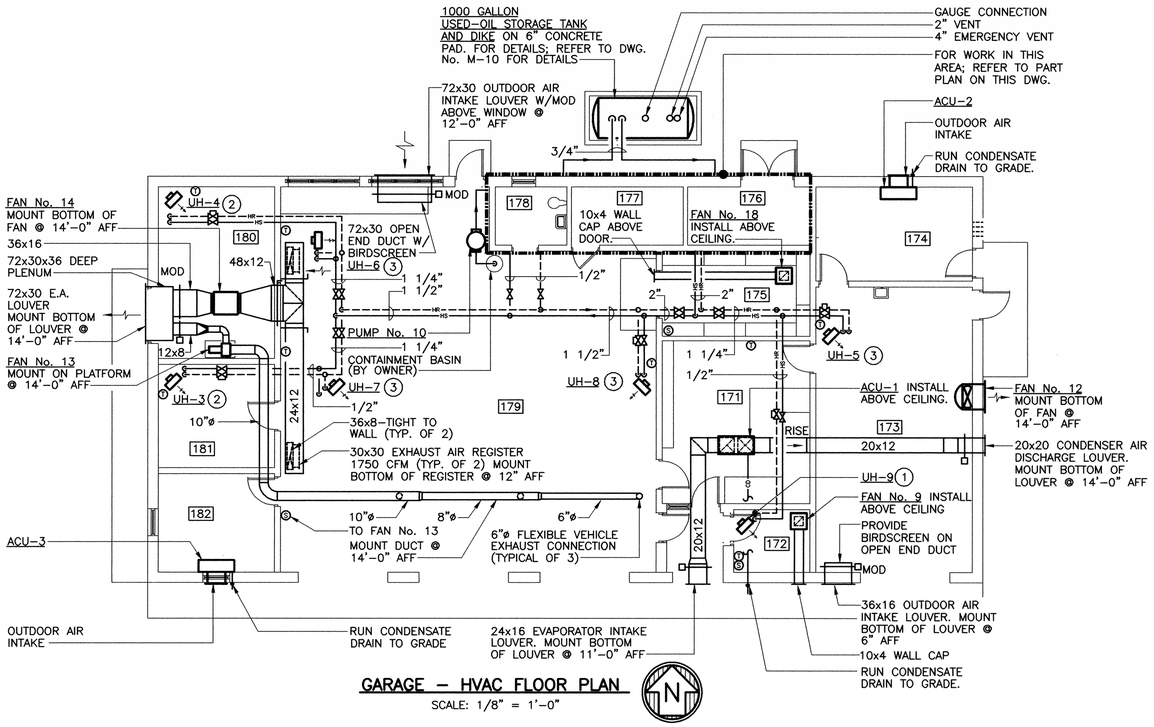

GARAGE – HVAC FLOOR PLAN

SCALE: 1/8" = 1'-0"

NOTE: FOR EQUIPMENT CONNECTION SIZES; REFER TO PIPE CONNECTION SCHEDULE ON DWG No. M-1.

ROOM SCHEDULE	
MARK	ROOMNAME
170	VEST
171	COMMUNICATION SHOP
172	STORAGE
173	WASH BAY
174	COMMUNICATION RM.
175	TIRE STORAGE RM.
176	MECHANICAL RM.
177	ELECTRICAL RM.
178	TOILET
179	MAINTENANCE BAYS
180	BARRACK STORAGE RM.
181	PARTS STORAGE
182	MECHANIC SUPERVISOR OFFICE

DRAWING NOTES:

1. MOUNT BOTTOM OF UNIT HEATER @ 8'-0" ABOVE FINISHED FLOOR.
2. MOUNT BOTTOM OF UNIT HEATER @ 12'-0" ABOVE FINISHED FLOOR.
3. MOUNT BOTTOM OF UNIT HEATER @ 14'-0" ABOVE FINISHED FLOOR.

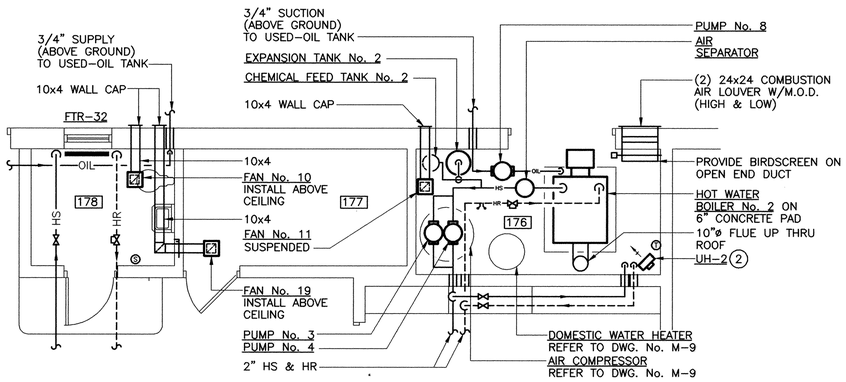

GARAGE – HVAC MECHANICAL PART PLAN

SCALE: 1/4" = 1'-0"

SCALE: 1/4" = 1'-0"

4 0 4 8

SCALE: 1/8" = 1'-0"

8 0 8 16

FOR REFERENCE ONLY
DGS# PH-582-232-002
HVAC Upgrades, MSP
Barrack -H-
AUGUST 2023

DEPARTMENT OF STATE POLICE

CAPITAL PROJECT OFFICER — DATE 11-4-98

DEPARTMENT OF GENERAL SERVICES APPROVAL

PROJECT ADMINISTRATOR — DATE 10/30/98

DIRECTOR, ENGR. AND CONST. — DATE 11/6/98

NO.	DATE	REVISIONS

Construction of New Police Barrack
Maryland State Police, Barrack H
LaPlata, Maryland
~~D.G.S. Project # PH 000 971 001~~

S.C. Burdette & Associates — Public Safety Consultant
2123 Maryland Avenue
Baltimore, Maryland 21218
(410) 547-6636

Carroll Engineering, Inc. — Civil Structural Engineers
61 Padonia Road, East, Suite C
Timonium, Maryland 21093
(410) 252-6211

Gipe Associates — Mechanical Electrical Engineers
Dulaney Center I, Suite 102
849 Fairmount Avenue
Baltimore, Maryland 21286
(410) 832-2420

Mahan Rykiel Associates — Landscape Architects
1330 Smith Avenue
Baltimore, Maryland 21209
(410) 435-1700

CHRISTOPHER CLARKE ASSOCIATES, ARCHITECTS
923 N. Calvert Street
Baltimore, Maryland 21202
TEL 410.752.3720
FAX 410.752.4823

DRAWING TITLE:

GARAGE HVAC FLOOR PLAN

STATE OF MARYLAND — MICHAEL JOHN PURTELL — NO. 19564 — REGISTERED PROFESSIONAL ENGINEER

PROJECT NO:	REVISIONS:
9757	
DATE: 10-7-98	
DRAWING NO: M-8	

MJP 97185M8.DWG
PCG 10/05/98

5-2337

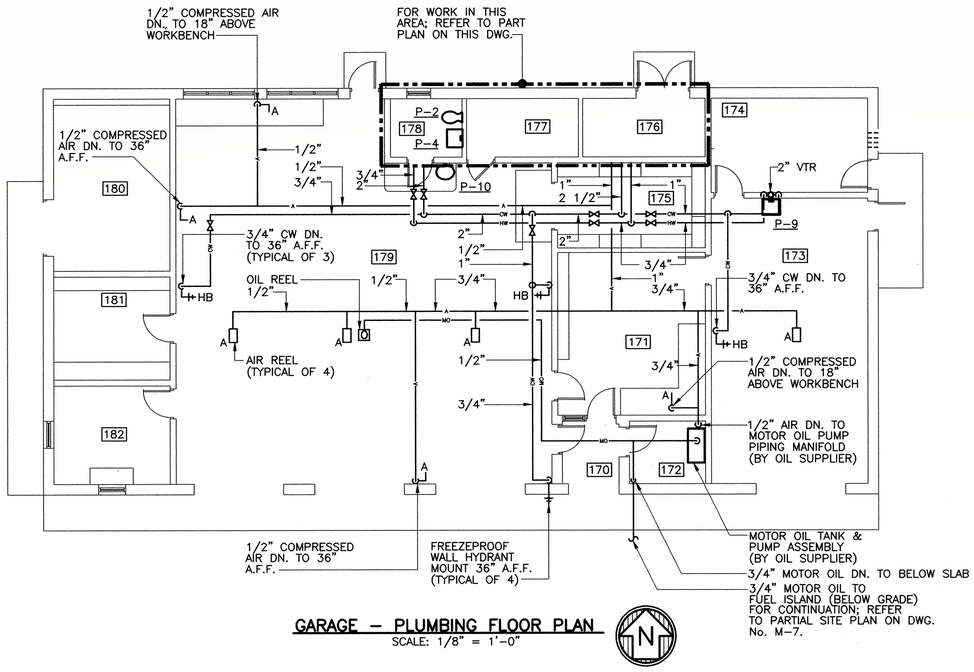

GARAGE – PLUMBING FLOOR PLAN
SCALE: 1/8" = 1'-0"

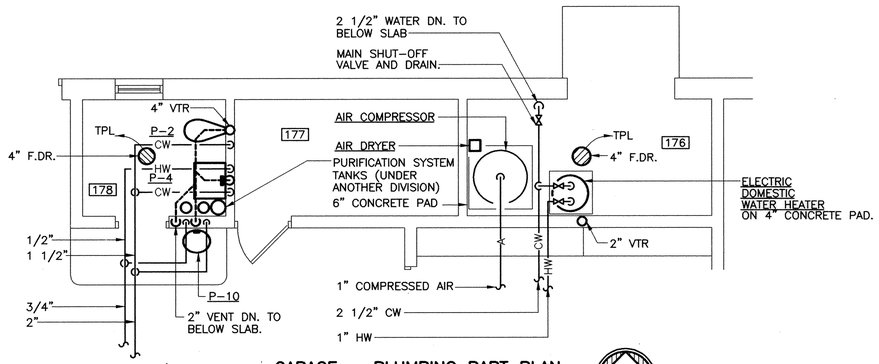

GARAGE – PLUMBING PART PLAN
SCALE: 1/8" = 1'-0"

ROOM SCHEDULE	
MARK	ROOMNAME
170	VEST
171	COMMUNICATION SHOP
172	STORAGE
173	WASH BAY
174	COMMUNICATION RM.
175	TIRE STORAGE RM.
176	MECHANICAL RM.
177	ELECTRICAL RM.
178	TOILET
179	MAINTENANCE BAYS
180	BARRACK STORAGE RM.
181	PARTS STORAGE
182	MECHANIC SUPERVISOR OFFICE

PLUMBING FIXTURE CONNECTION SCHEDULE (GARAGE)

DESIG.	FIXTURE	ROUGH-IN CONNECTION				REMARKS
		C.W.	H.W.	SAN.	VENT	
P-2	WATER CLOSET	1"	–	4"	2"	
P-4	LAVATORY	1/2"	1/2"	1 1/2"	1 1/2"	
P-9	SERVICE SINK	3/4"	3/4"	3"	1 1/2"	WALL-HUNG
P-10	EMERGENCY EYEWASH	1/2"	1/2"	3"	1 1/2"	

SCALE: 1/4" = 1'-0"
4 0 4 8

SCALE: 1/8" = 1'-0"
8 0 8 16

FOR REFERENCE ONLY
DGS# PH-582-232-002
HVAC Upgrades, MSP
Barrack -H-
AUGUST 2023

DEPARTMENT OF STATE POLICE
CAPITAL PROJECT OFFICER — DATE 11-4-98

DEPARTMENT OF GENERAL SERVICES APPROVAL
PROJECT ADMINISTRATOR — DATE 10/30/98
DIRECTOR, ENGR. AND CONST. — DATE 11/6/98

NO.	DATE	REVISIONS

Construction of New Police Barrack
Maryland State Police, Barrack H
LaPlata, Maryland
~~D.G.S Project # PH 000 971 001~~

S.C. Burdette & Associates — Public Safety Consultant
2123 Maryland Avenue
Baltimore, Maryland 21218
(410) 547-6636

Carroll Engineering, Inc. — Civil Structural Engineers
61 Padonia Road, East, Suite C
Timonium, Maryland 21093
(410) 252-6211

Gipe Associates — Mechanical Electrical Engineers
Dulaney Center I, Suite 102
849 Fairmount Avenue
Baltimore, Maryland 21286
(410) 832-2420

Mahan Rykiel Associates — Landscape Architects
1330 Smith Avenue
Baltimore, Maryland 21209
(410) 435-1700

Columbus Clarke Associates
923 N. Calvert Street
Baltimore, Maryland 21202
TEL 410.752.3720
FAX 410.752.4823

DRAWING TITLE
GARAGE PLUMBING FLOOR PLAN

STATE OF MARYLAND — MICHAEL JOHN PURTELL — NO. 19564 — REGISTERED PROFESSIONAL ENGINEER

PROJECT NO: 9757
REVISIONS:
DATE: 10-7-98
DRAWING NO: M-9

MJP 97185M9.DWG
PCG 10/05/98
5-2338

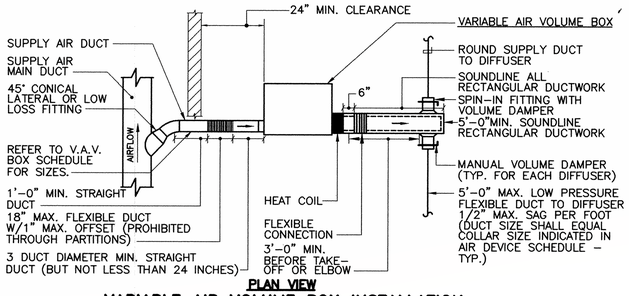

VARIABLE AIR VOLUME BOX INSTALLATION

NO SCALE

(APPLIES TO BARRACKS BUILDING ONLY)

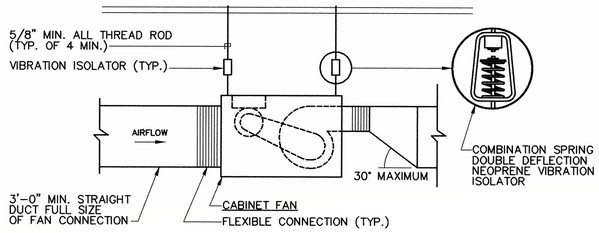

IN-LINE FAN INSTALLATION

NO SCALE

(APPLIES TO BARRACKS BUILDING & GARAGE BUILDING)

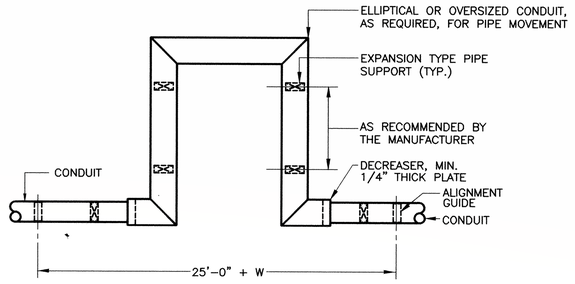

EXPANSION LOOP INSTALLATION

NO SCALE

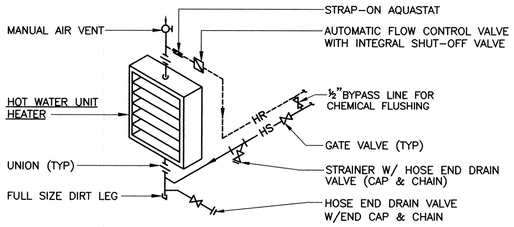

HORIZONTAL HOT WATER UNIT HEATER INSTALLATION

NO SCALE

(APPLIES TO BARRACKS BUILDING & GARAGE BUILDING)

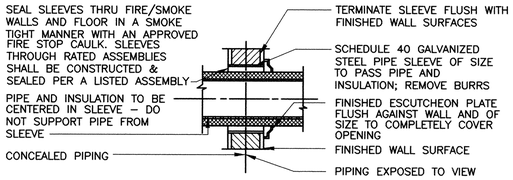

NOTE: FOR INTERIOR FRAME PARTITIONS-PIPE SLEEVES MAY BE FABRICATED FROM GALVANIZED SHEET METAL; ROUND TUBE CLOSED WITH SNAPLOCK JOINT, WELDED SPIRAL SEAMS, OR WELDED LONGITUDINAL JOINT. FABRICATE FROM THE FOLLOWING GAUGES: 3" AND SMALLER, 20 GAUGE; 4" TO 6", 16 GAUGE; OVER 6", 14 GAUGE.

PIPE SLEEVE THRU WALL INSTALLATION

NO SCALE

(APPLIES TO BARRACKS BUILDING & GARAGE BUILDING)

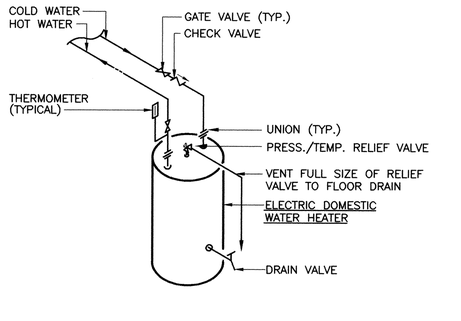

ELECTRIC DOMESTIC WATER HEATER

NO SCALE

(APPLIES TO GARAGE BUILDING ONLY)

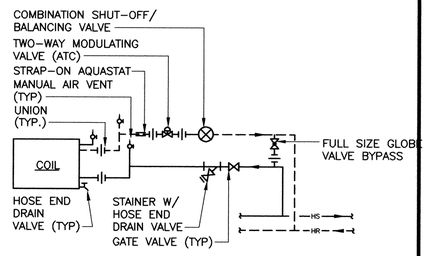

CABINET UNIT HEATER PIPING

NO SCALE

(APPLIES TO BARRACKS BUILDING ONLY)

PRE-HEAT COIL PIPING

NO SCALE

(APPLIES TO BARRACKS BUILDING ONLY)

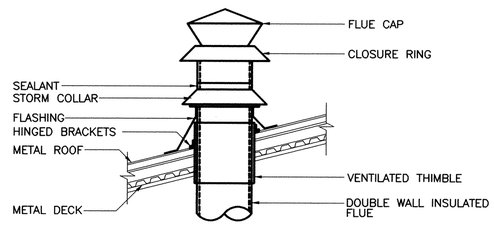

FLUE THRU ROOF INSTALLATION

NO SCALE

(APPLIES TO BARRACKS BUILDING & GARAGE BUILDING)

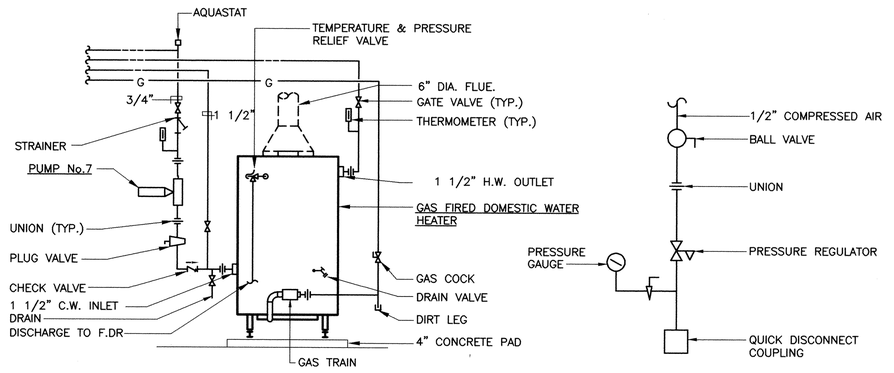

GAS-FIRED DOMESTIC WATER HEATER

NO SCALE:

(APPLIES TO BARRACKS BUILDING ONLY)

COMPRESSED AIR OUTLET

NO SCALE

(APPIES TO GARAGE BUILDING ONLY)

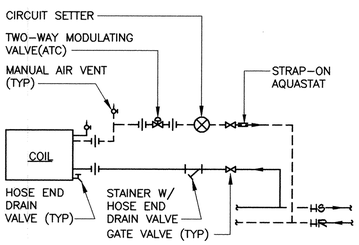

TERMINAL BOX HOT WATER HEATING COIL

NO SCALE

(APPLIES TO BARRACKS BUILDING ONLY)

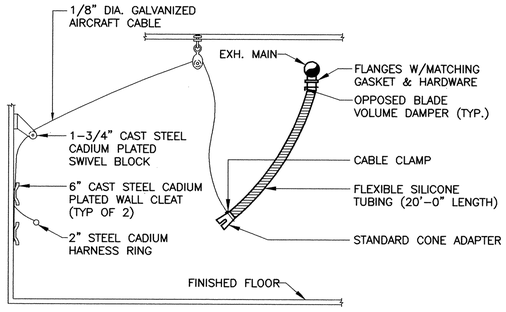

ENGINE EXHAUST CONNECTION

NO SCALE

(APPLIES TO GARAGE BUILDING ONLY)

USED OIL TANK

NO SCALE

(APPLIES TO GARAGE BUILDING ONLY)

FOR REFERENCE ONLY
DGS# PH-582-232-002
HVAC Upgrades, MSP
Barrack -H-
AUGUST 2023

DEPARTMENT OF STATE POLICE

CAPITAL PROJECT OFFICER — DATE 11-4-98

DEPARTMENT OF GENERAL SERVICES APPROVAL

PROJECT ADMINISTRATOR — DATE 10/30/98

DIRECTOR, ENGR. AND CONST. — DATE 11/6/98

NO.	DATE	REVISIONS

Construction of New Police Barrack
Maryland State Police, Barrack H
LaPlata, Maryland
~~D.G.S Project # PH 000 971 001~~

S.C. Burdette & Associates — Public Safety Consultant
2123 Maryland Avenue
Baltimore, Maryland 21218
(410) 547-6636

Carroll Engineering, Inc. — Civil Structural Engineers
61 Padonia Road, East, Suite C
Timonium, Maryland 21093
(410) 252-6211

Gipe Associates — Mechanical Electrical Engineers
Dulaney Center I, Suite 102
849 Fairmount Avenue
Baltimore, Maryland 21286
(410) 832-2420

Mahan Rykiel Associates — Landscape Architects
1330 Smith Avenue
Baltimore, Maryland 21209
(410) 435-1700

923 N. Calvert Street
Baltimore, Maryland 21202
TEL 410.752.3720
FAX 410.752.4823

DRAWING TITLE:

MECHANICAL DETAILS

PROJECT NO: 9757
DATE: 10-7-98
REVISIONS:
DRAWING NO: M-10

STATE OF MARYLAND — MICHAEL JOHN RUBERT — NO. 19984 — REGISTERED PROFESSIONAL ENGINEER

MJP 97185M10.DWG
PCG 10/05/98

5-2339

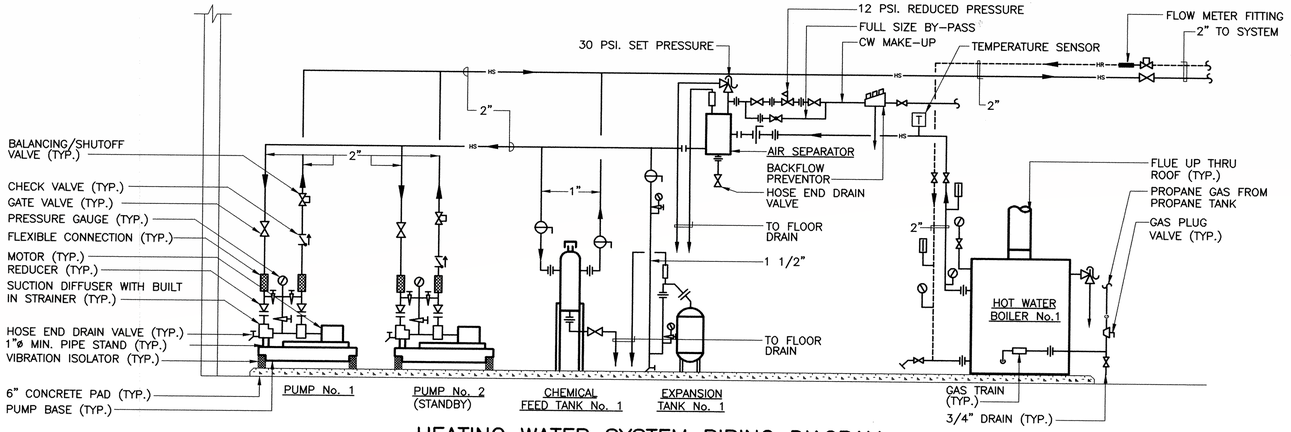

HEATING WATER SYSTEM PIPING DIAGRAM FOR BARRACKS BUILDING

NO SCALE

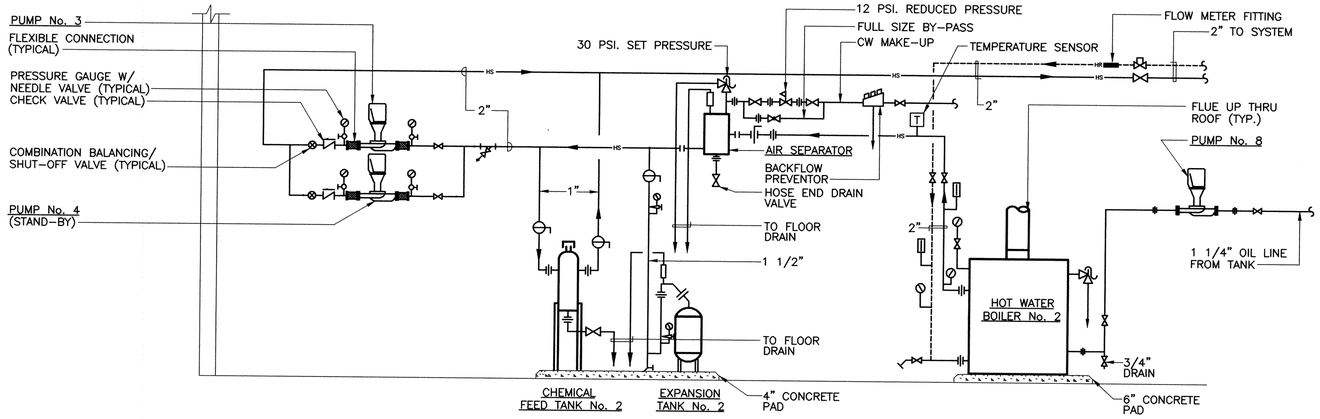

HEATING WATER SYSTEM PIPING DIAGRAM FOR GARAGE BUILDING

NO SCALE

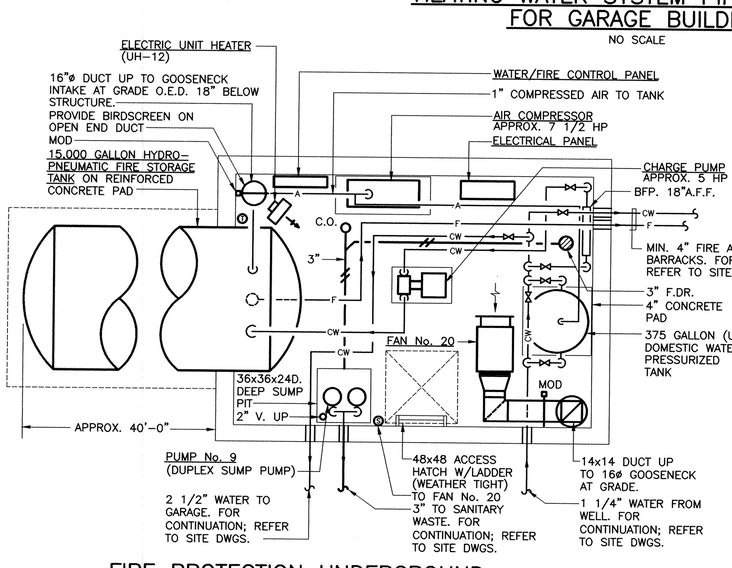

FIRE PROTECTION UNDERGROUND VAULT FLOOR PLAN

SCALE: 1/4" = 1'-0"

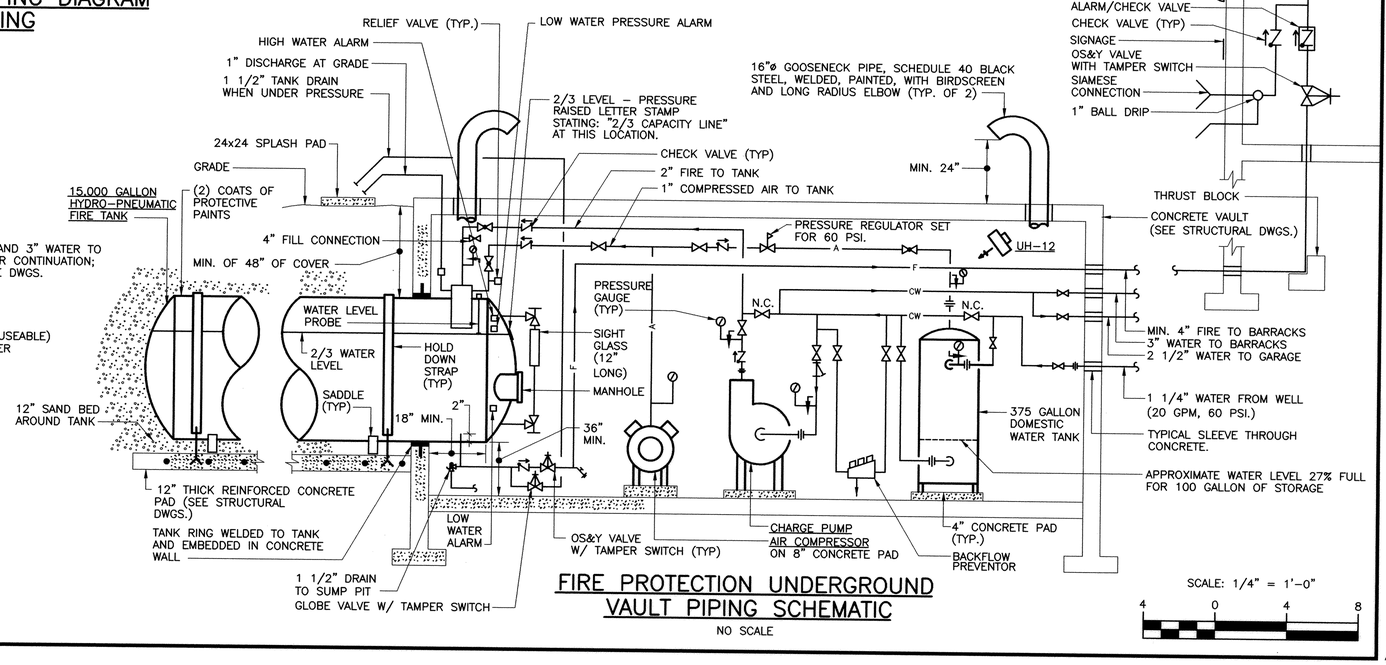

FIRE PROTECTION UNDERGROUND VAULT PIPING SCHEMATIC

NO SCALE

SCALE: 1/4" = 1'-0"

4 0 4 8

HYDRO PNEUMATIC CONTROL SEQUENCE OF OPERATION:

THIS WATER SUPPLY SYSTEM IS TO BE CONTROLLED AND PROTECTED BY A BAY HYDRO PNEUMATIC CONTROL OR EQUAL. CONTROLS SHALL MEET ALL NFPA. REQUIREMENTS.

UNIT TO PROVIDE AUTOMATIC START AND STOP OF PUMP(S) AND AIR COMPRESSOR BY SENSING SYSTEM PRESSURE AND WATER LEVEL IN THE HYDRO PNEUMATIC TANKS.

CONTROL TO BE PRE-WIRED IN A JIC OR NEMA 12 GASKETED CLAMP COVER WALL-MOUNTED ENCLOSURE THAT SHALL INCLUDE THE FOLLOWING: VISUALLY ADJUSTABLE BOURDON-TUBE-OPERATED MERCURY CONTACT PRESSURE SENSOR(S), ELECTRODE LEVEL SENSING RELAY WITH ISOLATION TRANSFORMER, A MAGNETIC STARTER WITH ALL LEG AMBIENT COMPENSATED QUICK TRIP OVERLOADS FOR EACH MOTOR, CONTROL RELAYS AND TERMINAL BLOCKS FOR POWER SUPPLY, MOTOR CONNECTIONS AND SEPARATELY MOUNTED COMPONENTS. MULTI-COLORED CIRCUITRY SHALL BE USED WITHIN THE CONTROL TO FACILITATE TROUBLE SHOOTING.

DOOR-MOUNTED ON THE CABINET SHALL BE: HAND-OFF-AUTO SELECTOR AND NEON RUN LIGHT FOR EACH MOTOR AND A 4-1/2" SYSTEM PRESSURE GAUGE.

INCLUDED WITH THE CONTROL FOR SEPARATE MOUNTED SHALL BE: TWO-LEVEL SENSING CHAMBER(S) WITH NEMA 4 ELECTRODE HOLDER AND TYPE 416 STAINLESS STEEL ELECTRODE ROD FOR INSTALLATION ON THE HEAD OF THE HYDRO PNEUMATIC TANK(S).

DOMESTIC SYSTEM OPERATION:

START UP FROM 0 PRESSURE, TANK EMPTY: WHEN THE SYSTEM IS ACTIVATED, THE WELL PUMP WILL START AND RUN UNTIL MAXIMUM WATER LEVEL IN THE HYDRO PNEUMATIC TANK IS REACHED. AT THIS POINT, THE PUMP WILL STOP AND THE AIR COMPRESSOR (AIR SUPPLY) WILL START AND OPERATE UNTIL THE SYSTEM CUT-OFF IS REACHED. (60 PSIG. IN TANK).

STARTING THE SYSTEM CUT-OFF PRESSURE AND MAXIMUM WATER LEVEL: AS WATER IS WITHDRAWN FROM THE SYSTEM, WATER LEVEL AND AIR PRESSURE IN THE TANK WILL DECREASE UNTIL THE PUMP CUT-IN PRESSURE IS REACHED. (40 PSIG) AT THIS POINT, THE PUMP WILL START AND RUN UNTIL THE SYSTEM CUT-OFF PRESSURE OR MAXIMUM WATER LEVEL IS REACHED. IF MAXIMUM WATER LEVEL IS REACHED FIRST, AIR SUPPLY WILL BE ACTIVATED UNTIL SYSTEM CUT-OFF PRESSURE IS ATTAINED.

AIR WITHDRAWN OR LOST FROM THE PRESSURE TANK WITHOUT THE ACCOMPANYING LOWERING OF WATER LEVEL WILL BE REPLACED AUTOMATICALLY BY THE AIR COMPRESSOR AS SOON AS THE PUMP CUT IN PRESSURE IS REACHED. SHOULD HAND OPERATION OF THE PUMP RESULT IN A HIGHER THAN MAXIMUM WATER LEVEL IN THE TANK, CONTROL WILL RESTORE THE PROPER WATER/AIR RATIO ON THE NEXT AUTOMATIC CYCLE.

FIRE SUPPRESSION SYSTEM OPERATION

A MANUAL FILL OF 10,000 GALLONS VIA TANK TRUCK WILL BRING THE HYDRO-PNEUMATIC TANK TO THE PROPER FILL LEVEL. AT THIS POINT, THE COMPRESSOR IS ENERGIZED AND WILL CHARGE THE VESSEL WITH SUFFICIENT AIR TO COMPLETELY EXPEL 10,000 GALLONS WITHOUT THE NEED FOR REPRESSURIZATION.

DURING NORMAL OPERATION, IF WATER IS LOST FROM THE TANK, A BOOSTER PUMP WILL BE ENERGIZED AND RUN UNTIL THE SYSTEM CUT-OFF PRESSURE (150 PSIG) OR MAXIMUM WATER LEVEL IS REACHED. IF MAXIMUM WATER LEVEL IS REACHED FIRST, AIR SUPPLY WILL BE ACTIVATED UNTIL SYSTEM CUT-OFF PRESSURE IS ATTAINED. PROVIDE ALARMS AS INDICATED AND ADDITIONALY AS REQUIRED BY NFPA-22.

NOTE: FIRE PROTECTION CONTRACTOR SHALL BE RESPONSIBLE FOR THE COMPLETE DESIGN AND INSTALLATION OF THE CONTENTS OF THE UNDERGROUND VAULT. THE INFORMATION ON THIS DRAWING IS TO BE USED AS A BASIS FOR DESIGN ONLY.

FOR REFERENCE ONLY
DGS# PH-582-232-002
HVAC Upgrades, MSP
Barrack -H-
AUGUST 2023

DEPARTMENT OF STATE POLICE

CAPITAL PROJECT OFFICER — DATE 11-4-98

DEPARTMENT OF GENERAL SERVICES APPROVAL

PROJECT ADMINISTRATOR — DATE 10/30/98

DIRECTOR, ENGR. AND CONST. — DATE 11/6/98

NO.	DATE	REVISIONS

Construction of New Police Barrack
Maryland State Police, Barrack H
LaPlata, Maryland
~~D.G.S Project # PH-000-971-001~~

S.C. Burdette & Associates — Public Safety Consultant
2123 Maryland Avenue
Baltimore, Maryland 21218
(410) 547-6636

Carroll Engineering, Inc. — Civil Structural Engineers
61 Padonia Road, East, Suite C
Timonium, Maryland 21093
(410) 252-6211

Cipe Associates — Mechanical Electrical Engineers
Dulaney Center I, Suite 102
849 Fairmount Avenue
Baltimore, Maryland 21286
(410) 832-2420

Mahan Rykiel Associates — Landscape Architects
1330 Smith Avenue
Baltimore, Maryland 21209
(410) 435-1700

923 N. Calvert Street
Baltimore, Maryland 21202
TEL 410.752.3720
FAX 410.752.4823

DRAWING TITLE
FIRE VAULT DETAILS AND MECHANICAL SCHEMATICS

PROJECT NO: 9757
DATE: 10-7-98
REVISIONS:
DRAWING NO: M-11

MJP 97185M11.DWG
PCG 10/05/98

5-2340

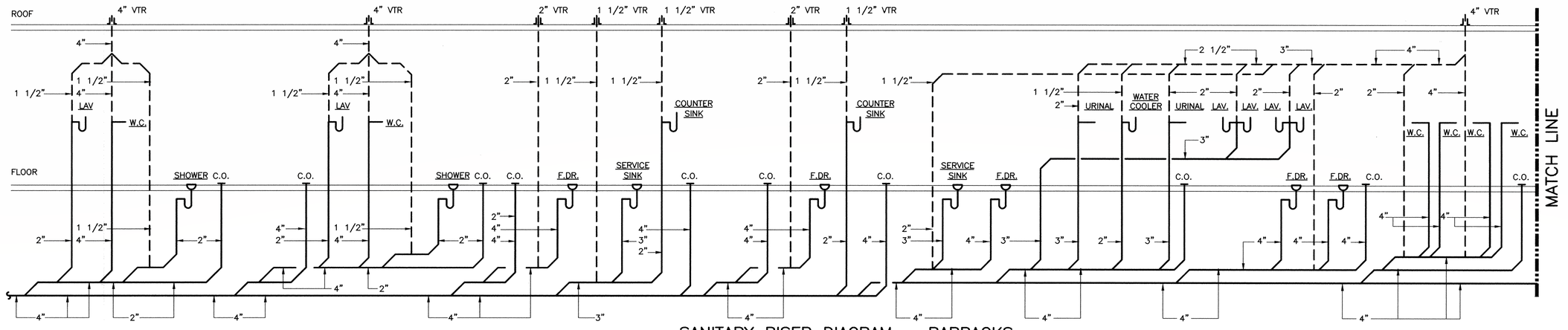

SANITARY RISER DIAGRAM – BARRACKS

NO SCALE

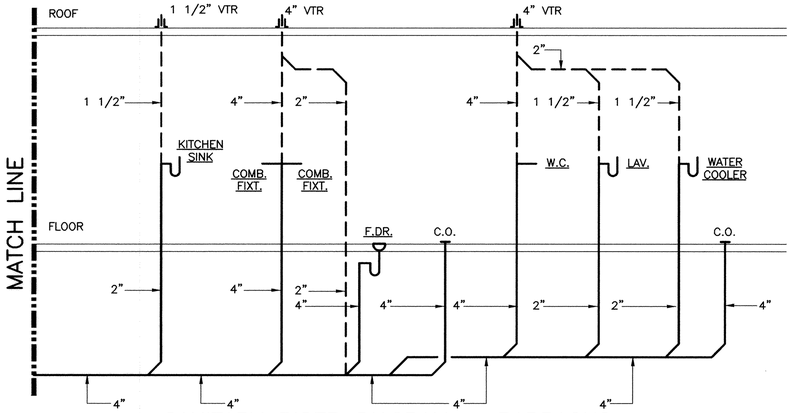

SANITARY RISER DIAGRAM – BARRACKS

(CONTINUED)

NO SCALE

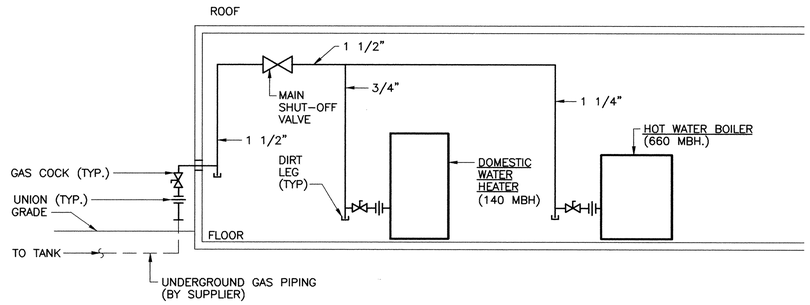

PROPANE GAS RISER DIAGRAM – BARRACKS

NO SCALE

NOTE:

ALL PROPANE GAS PIPING SHALL BE INSTALLED & TESTED IN ACCORDANCE WITH NFPA 54: "NATIONAL FUEL GAS CODE".

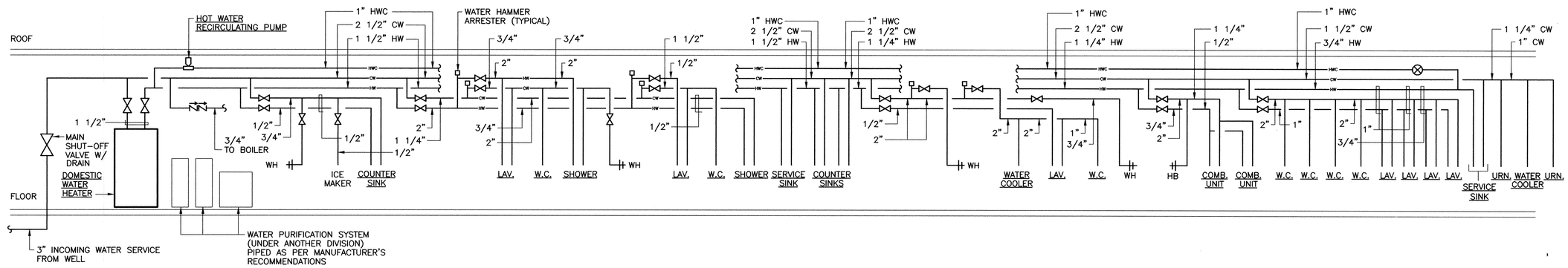

DOMESTIC WATER RISER DIAGRAM – BARRACKS

NO SCALE

FOR REFERENCE ONLY
DGS# PH-582-232-002
HVAC Upgrades, MSP
Barrack -H-
AUGUST 2023

DEPARTMENT OF STATE POLICE

CAPITAL PROJECT OFFICER — DATE 11-4-98

DEPARTMENT OF GENERAL SERVICES APPROVAL

PROJECT ADMINISTRATOR — DATE 10/30/98

DIRECTOR, ENGR. AND CONST. — DATE 11/6/98

NO.	DATE	REVISIONS

Construction of New Police Barrack
Maryland State Police, Barrack H
LaPlata, Maryland
~~D.G.S Project # PH-000-971-001~~

S.C. Burdette & Associates — Public Safety Consultant
2123 Maryland Avenue
Baltimore, Maryland 21218
(410) 547-6636

Carroll Engineering, Inc. — Civil Structural Engineers
61 Padonia Road, East, Suite C
Timonium, Maryland 21093
(410) 252-6211

Gipe Associates — Mechanical Electrical Engineers
Dulaney Center I, Suite 102
849 Fairmount Avenue
Baltimore, Maryland 21286
(410) 832-2420

Mahan Rykiel Associates — Landscape Architects
1330 Smith Avenue
Baltimore, Maryland 21209
(410) 435-1700

923 N. Calvert Street
Baltimore, Maryland 21202
TEL 410.752.3720
FAX 410.752.4823

DRAWING TITLE: BARRACKS RISER DIAGRAMS

STATE OF MARYLAND — MICHAEL JOHN FONTECE — NO. 19564 — REGISTERED PROFESSIONAL ENGINEER

PROJECT NO: 9757

DATE: 10-7-98

REVISIONS:

DRAWING NO: M-12

MJP 97185M12.DWG
PCG 10/05/98

5-2341

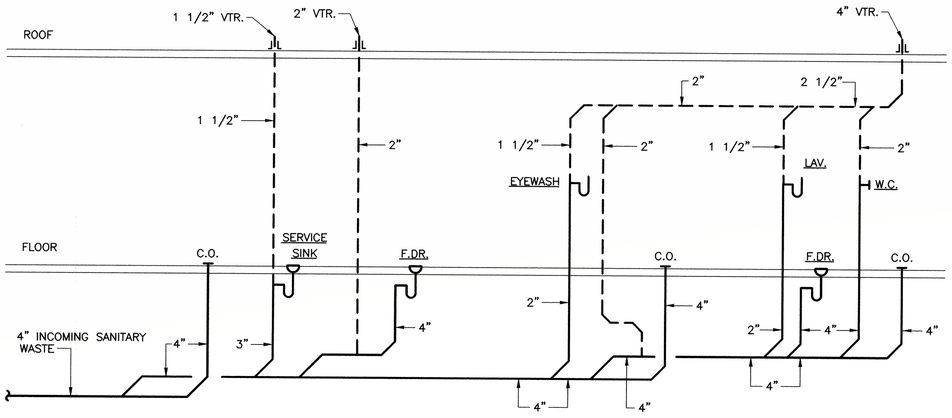

SANITARY RISER DIAGRAM – GARAGE
NO SCALE

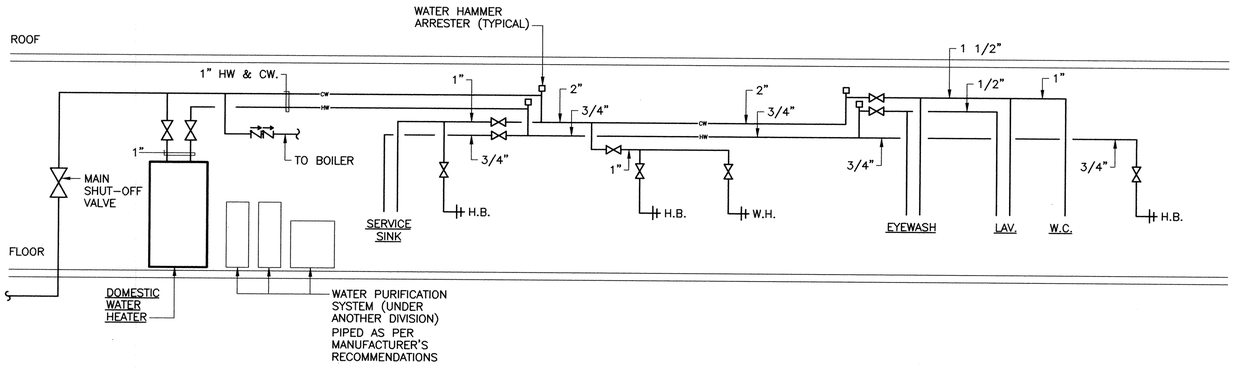

DOMESTIC WATER RISER DIAGRAM – GARAGE
NO SCALE

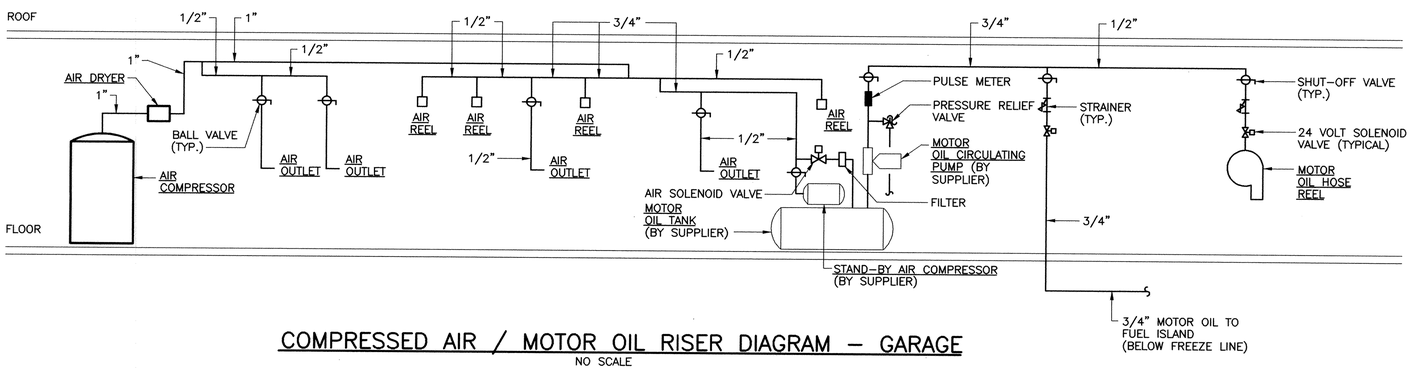

COMPRESSED AIR / MOTOR OIL RISER DIAGRAM – GARAGE
NO SCALE

FOR REFERENCE ONLY
DGS# PH-582-232-002
HVAC Upgrades, MSP
Barrack -H-
AUGUST 2023

DEPARTMENT OF STATE POLICE
CAPITAL PROJECT OFFICER — DATE 11-4-98

DEPARTMENT OF GENERAL SERVICES APPROVAL
PROJECT ADMINISTRATOR — DATE 10/30/98
DIRECTOR, ENGR. AND CONST. — DATE 11/6/98

NO.	DATE	REVISIONS

Construction of New Police Barrack
Maryland State Police, Barrack H
LaPlata, Maryland
~~D.G.S Project # PH 000 971 001~~

S.C. Burdette & Associates — Public Safety Consultant
2123 Maryland Avenue
Baltimore, Maryland 21218
(410) 547-6636

Carroll Engineering, Inc. — Civil Structural Engineers
61 Padonia Road, East, Suite C
Timonium, Maryland 21093
(410) 252-6211

Gipe Associates — Mechanical Electrical Engineers
Dulaney Center I, Suite 102
849 Fairmount Avenue
Baltimore, Maryland 21286
(410) 832-2420

Mahan Rykiel Associates — Landscape Architects
1330 Smith Avenue
Baltimore, Maryland 21209
(410) 435-1700

COLIMORE CLARKE ASSOCIATES ARCHITECTS
923 N. Calvert Street
Baltimore, Maryland 21202
TEL 410.752.3720
FAX 410.752.4823

DRAWING TITLE: GARAGE RISER DIAGRAMS

PROJECT NO: 9757
REVISIONS:
DATE: 10-7-98
DRAWING NO: M-13

MJP 97185M13.DWG
PCG 10/05/98
5-2342

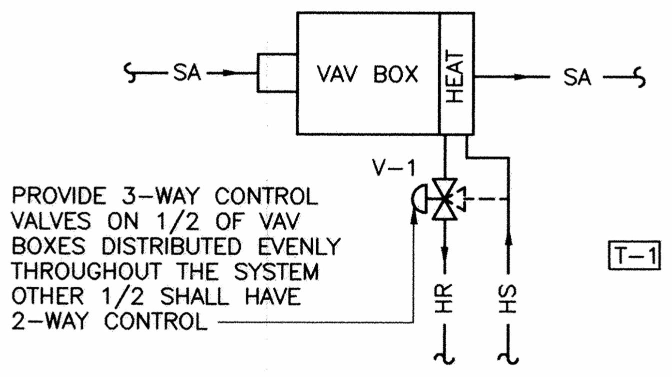

VAV BOX CONTROL

OCCUPIED:

1. COOLING – ROOM THERMOSTAT T-1 SHALL MODULATE PRIMARY AIR INLET DAMPER BETWEEN MINIMUM AND MAXIMUM SCHEDULED VALUES TO MAINTAIN SETPOINT (NORMALLY 78 DEG. F.).
2. HEATING – IF AT MINIMUM PRIMARY AIR CFM ADDITIONAL HEATING IS REQUIRED, T-1 SHALL MODULATE VALVE V-1 TO MAINTAIN SETPOINT (NORMALLY 70 DEG. F.).
3. THERMOSTAT SHALL HAVE 2 DEG. F. DEADBAND TO SEPARATE COOLING AND HEATING SETPOINTS.

UNOCCUPIED:

1. PRIMARY AIR INLET DAMPER SHALL BE CLOSED.
2. V-1 FAILS OPEN TO COIL.

FAN CONTROL FOR FAN Nos. 3,11,12,14,16 & 19

1. WHEN SPACE TEMPERATURE AT WALL MOUNTED THERMOSTAT T-1 RISES TO 85°F., OUTDOOR AIR INTAKE DAMPER AND EXHAUST DAMPER SHALL OPEN AND FANS SHALL START.
2. WHEN SPACE TEMPERATURE AT WALL MOUNTED THERMOSTAT T-1 FALLS TO 75°F., OUTDOOR AIR INTAKE DAMPER AND EXHAUST DAMPER SHALL CLOSE AND FANS SHALL STOP.
3. FAN Nos. 3 AND 11 SHALL BE "OFF" WHEN COMBUSTION AIR IS REQUIRED.

FAN CONTROL FOR FAN Nos. 9,10,13,15,18 & 20

1. FAN SHALL BE STARTED AND STOPPED BY WALL MOUNTED MANUAL SWITCH.

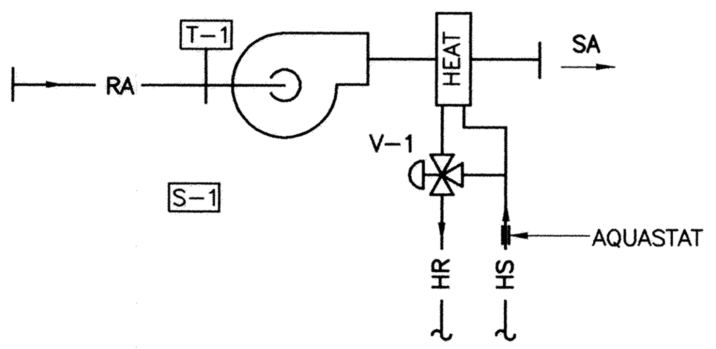

CABINET UNIT HEATER CONTROL

1. UNIT IS STARTED AND STOPPED BY SWITCH S-1 LOCATED INSIDE OF UNIT CABINET. WHEN UNIT IS ON, FAN RUNS CONTINUOUSLY, WHENEVER HEATING WATER IS AVAILABLE, AS SENSED BY AQUASTAT.
2. RETURN AIR THERMOSTAT T-1 SHALL MODULATE V-1 TO MAINTAIN 60° F.

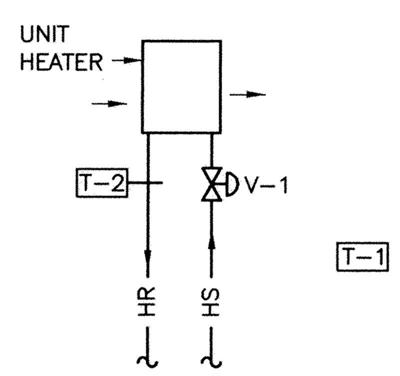

UNIT HEATER CONTROL

1. UNIT IS STARTED AND STOPPED BY DISCONNECT SWITCH S-1 MOUNTED ON UNIT. MAINTAIN MIN. SPACE TEMPERATURE OF 60°F.
2. SPACE STAT T-1 CYCLES FAN AND V-1 THROUGH LOW LIMIT AQUASTAT (STRAP-ON)T-2 TO

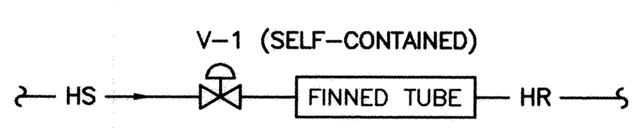

FINNED TUBE RADIATION CONTROL

1. SELF-CONTAINED RADIATOR VALVE V-1, MODULATES TO MAINTAIN SET POINT (68°F. – 75°F.)

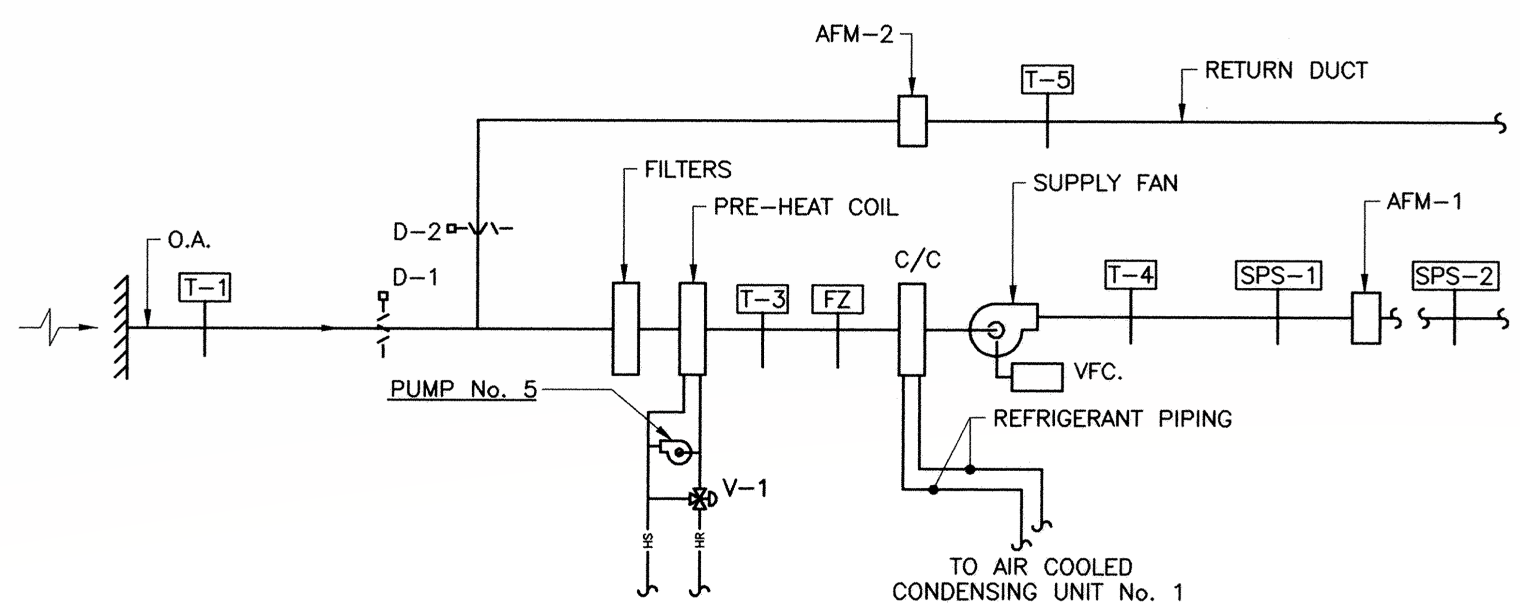

AIR HANDLING UNIT No.1 CONTROL

A. GENERAL:

1. SUPPLY FAN SHALL OPERATE CONTINUOUSLY IN THE OCCUPIED MODE. H-O-A SWITCH SHALL BE KEPT IN "AUTO" POSITION. IN "OFF" POSITION, D-1 SHALL BE FULLY CLOSED AND D-2 SHALL BE FULLY OPEN. WHEN FAN IS DE-ENERGIZED, D-1 SHALL BE FULLY CLOSED.
2. FAN SHALL BE NORMALLY STARTED AND STOPPED OR OCCUPIED – UNOCCUPIED BY SEVEN DAY PROGRAMMABLE TIME CLOCK.
3. FAN No.1 SHALL RUN CONTINUOUSLY WHEN AHU-1 IS ENERGIZED.

B. TEMPERATURE CONTROL:

1. OCCUPIED: FAN SHALL OPERATE CONTINUOUSLY IN THE OCCUPPIED MODE. D-1 SHALL BE IN ITS MINIMUM POSITION. THE SUPPLY AIR TEMPERATURE SENSED BY T-4, SHALL THEN BE MAINTAINED AT SETPOINT BY MODULATING V-1 OR ENERGIZING REFRIGERATION CYCLE (AIR COOLED CONDENSING UNIT) AS REQUIRED. THE SUPPLY AIR TEMPERATURE SETPOINT SHALL BE 55° (ADJUSTABLE). T-3 MODULATES V-1 TO MAINTAIN A MINIMUM SUPPLY AIR TEMPERATURE OF 55° (ADJUSTABLE).
2. UNOCCUPIED: UNIT IS IN OCCUPIED MODE 24 HOURS A DAY.

C. AIR FLOW CONTROL:

1. STATIC PRESSURE SENSOR, SPS-2, SHALL MODULATE THE SUPPLY FAN VARIABLE FREQUENCY CONTROLLER, VFC TO MAINTAIN THE SUPPLY STATIC PRESSURE SETPOINT.
2. AIR FLOW MONITOR, AFM-1, LOCATED IN SUPPLY DUCT, SHALL RESET THE RETURN AIR TO MAINTAIN A CONSTANT AIR FLOW (CFM) DIFFERENTIAL BETWEEN THE SUPPLY AND RETURN AIR (AFM-2).

D. FREEZE PROTECTION:

1. HEATING WATER CIRCULATOR PUMP (No. 5) SHALL OPERATE CONTINUOUSLY WHEN SUPPLY FAN IS DE-ENERGIZED AND OUTSIDE TEMPERATURE IS BELOW 40°F.
2. WHEN THE AIR TEMPERATURE, AS SENSED BY T-3, FALLS BELOW 40°F, AN ALARM SIGNAL SHALL BE INDICATED IN THE COMMUNICATIONS ROOM-126. IF THIS TEMPERATURE FALLS BELOW 36°, THE UNIT SUPPLY FAN SHALL DE-ENERGIZE, AND A CRITICAL ALARM SHALL BE INDICATED IN THE COMMUNICATIONS ROOM-126.

E. MISCELLANEOUS:

1. HIGH LIMIT STATIC PRESSURE SENSOR, SPS-1, SHALL DE-ENERGIZE AHU FANS WHEN STATIC PRESSURE REACHES 4.0" (ADJUSTABLE).

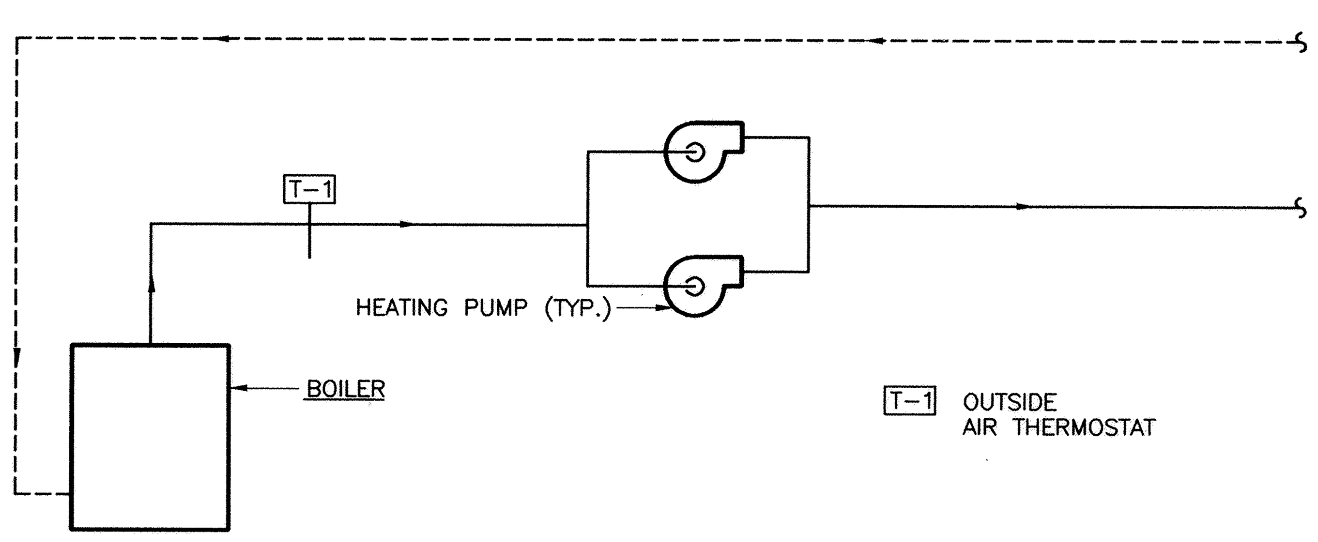

HEATING WATER CONTROL

1. GENERAL HEATING PUMP SHALL RUN CONTINUOUSLY BELOW 60°F O.A. TEMPERATURE.
2. WHENEVER HEATING PUMP IS ENERGIZED, BOILER(S) SHALL BE ENERGIZED. INTEGRAL ELECTRONIC BOILER CONTROLLER SHALL BE CONTROLLED BY T-1 TO MAINTAIN 180° SUPPLY WATER.
3. PROVIDE LEAD-LAG PUMP OPERATION WITH ALTERNATOR FOR EACH PUMP ARRANGEMENT. LAG PUMP SHALL ENERGIZE AUTOMATICALLY SHOULD THE LEAD PUMP FAIL. PROOF OF PUMP OPERATION SHALL BE VIA. SEPARATE CURRENT SENSING RELAYS.

CONTROL NOTES:

1. ALL SETPOINTS SHALL BE ADJUSTABLE.
2. ALARMS SHALL BE AUDIBLE WITH FLASHING LIGHT.

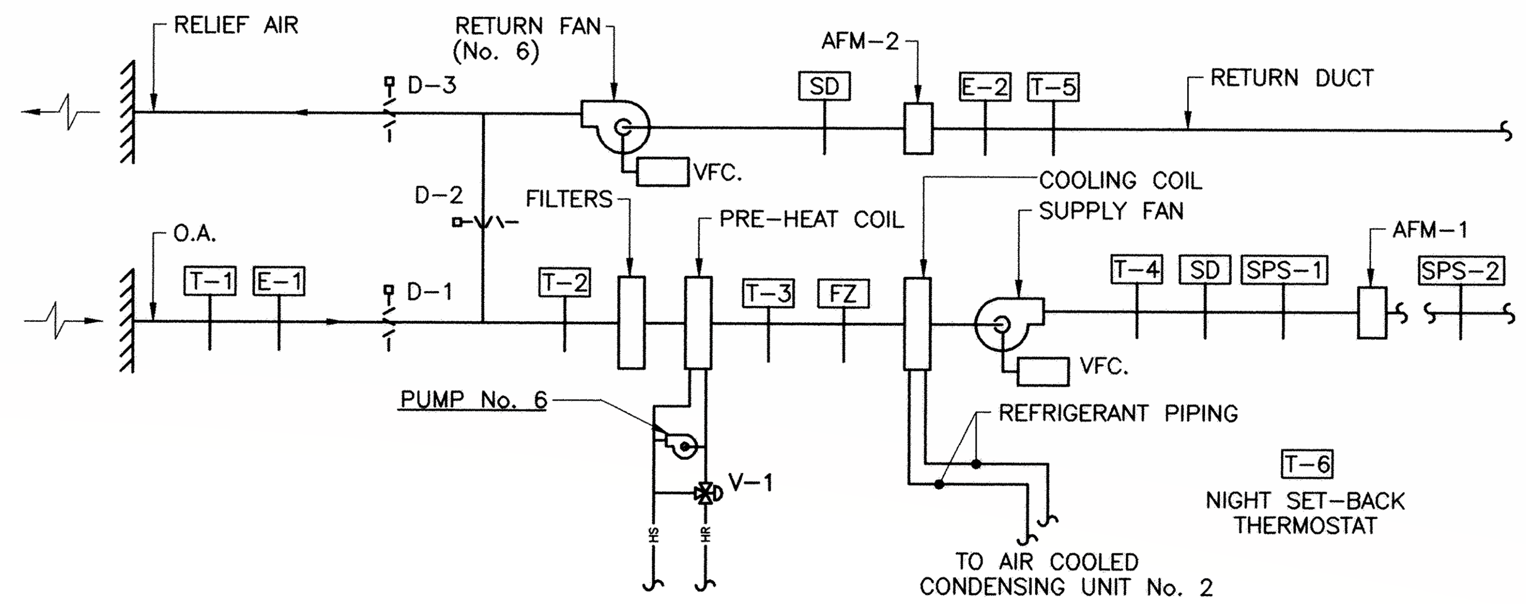

AIR HANDLING UNIT No.2 CONTROL

A. GENERAL:

1. SUPPLY AIR FAN AND RETURN AIR FAN OPERATION SHALL BE INTERLOCKED. SUPPLY AND RETURN FANS SHALL OPERATE CONTINUOUSLY IN THE OCCUPIED MODE. H-O-A SWITCH SHALL BE KEPT IN "AUTO" POSITION. IN "OFF" POSITION, D-1 AND D-3 SHALL BE FULLY CLOSED AND D-2 SHALL BE FULLY OPEN. WHEN FANS ARE DE-ENERGIZED, D-1 AND D-3 SHALL BE FULLY CLOSED.
2. FANS SHALL BE NORMALLY STARTED AND STOPPED OR OCCUPIED – UNOCCUPIED BY SEVEN DAY PROGRAMMABLE TIME CLOCK.
3. FAN No. 2,4,7,8 AND 17 SHALL RUN CONTINUOUSLY WHEN AHU-2 IS ENERGIZED.

B. TEMPERATURE CONTROL:

1. OCCUPIED: FAN(S) SHALL OPERATE CONTINUOUSLY IN THE OCCUPPIED MODE. WHEN THE OUTSIDE AIR ENTHALPY E-1 IS LESS THAN THE RETURN AIR ENTHALPY E-2, DAMPER D-1. D-2 AND D-3 SHALL MODULATE TO MAXIMIZE ATMOSPHERIC (FREE) COOLING. THE SUPPLY AIR TEMPERATURE, SENSED BY T-4, SHALL THEN BE MAINTAINED AT SETPOINT BY MODULATING V-1 OR ENERGIZING REFRIGERATION CYCLE (AIR COOLED CONDENSING UNIT) AS REQUIRED. THE SUPPLY AIR TEMPERATURE SETPOINT SHALL BE 55° (ADJUSTABLE). T-3 MODULATES V-1 TO MAINTAIN A MINIMUM SUPPLY AIR TEMPERATURE OF 55° (ADJUSTABLE).
2. UNOCCUPIED: NIGHT THERMOSTAT T-6, SHALL CYCLE FAN(S) AND OPEN HEATING VALVE, V-1, TO MAINTAIN NIGHT SETBACK TEMPERATURE OF 55°F. V-1 IS OPEN TO COIL.
3. MORNING WARM-UP: WHEN SYSTEM IS FIRST INDEXED TO OCCUPIED, DAMPERS D-1 AND D-3 SHALL REMAIN CLOSED, D-2 SHALL REMAIN OPEN, AND FAN(S) SHALL OPERATE WITH HEATING VALVE OPEN UNIT RETURN AIR, AS SENSED BY T-5, REACHES 65°F (ADJUSTABLE). AT THIS TIME, SYSTEM SHALL RETURN TO THE OCCUPIED MODE.

C. AIR FLOW CONTROL:

1. STATIC PRESSURE SENSOR, SPS-2, SHALL MODULATE THE SUPPLY FAN VARIABLE FREQUENCY CONTROLLER, VFC TO MAINTAIN THE SUPPLY STATIC PRESSURE SETPOINT.
2. AIR FLOW MONITOR, AFM-1, LOCATED IN SUPPLY DUCT, SHALL RESET THE RETURN AIR FAN VARIABLE FREQUENCY CONTROLLER, VFC, TO MAINTAIN A CONSTANT AIR FLOW (CFM) DIFFERENTIAL BETWEEN THE SUPPLY AND RETURN AIR (AFM-2).

D. FREEZE PROTECTION:

1. HEATING WATER CIRCULATOR PUMP (No. 6) SHALL OPERATE CONTINUOUSLY WHEN SUPPLY FAN IS DE-ENERGIZED AND OUTSIDE TEMPERATURE IS BELOW 40°F.
2. WHEN THE AIR TEMPERATURE, AS SENSED BY T-3, FALLS BELOW 40°F, AN ALARM SIGNAL SHALL BE INDICATED. IF THIS TEMPERATURE FALLS BELOW 36°, THE UNIT SUPPLY AND RETURN FAN(S) SHALL DE-ENERGIZE, AND A CRITICAL ALARM SHALL BE INDICATED IN THE COMMUNICATIONS ROOM-126.

E. MISCELLANEOUS:

1. SMOKE DETECTORS, SD, LOCATED IN THE SUPPLY AND RETURN AIR SHALL DE-ENERGIZE FANS SHOULD PRODUCTS OF COMBUSTION BE SENSED. PROVIDE CONTACTS AS REQUIRED TO INTERLOCK WITH ALARM SYSTEM.
2. HIGH LIMIT STATIC PRESSURE SENSOR, SPS-1, SHALL DE-ENERGIZE AHU FANS WHEN STATIC PRESSURE REACHES 4.0" (ADJUSTABLE).
3. T-2 OVERRIDES FREE COOLING CONTROL TO UNIT'S MIXED AIR TEMPERATURE TO 42°F. MINIMUM.

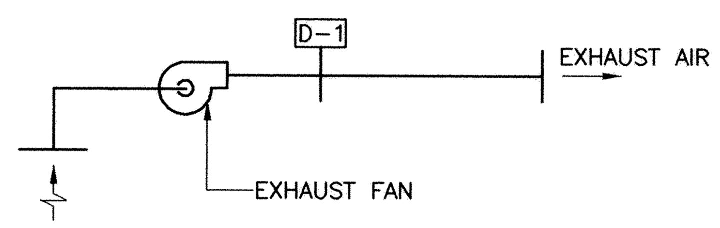

INTERLOCKED EXHAUST FAN CONTROL

1. WHEN FAN STARTS, MOTOR OPERATED DAMPER D-1, OPENS.
2. WHEN FAN STOPS, MOTOR OPERATED DAMPER D-1, CLOSES.

AIR CONDITIONING UNIT No. 1 CONTROL

1. WHEN WALL MOUNTED THERMOSTAT CALLS FOR COOLING, INDOOR EVAPORATOR FAN, COMPRESSOR AND CONDENSER FAN SHALL START.
2. WHEN ROOM TEMPERATURE IS SATISFIED, THE EVAPORATOR FAN, COMPRESSOR AND CONDENSER FAN SHALL STOP.
3. WHEN ROOM TEMPERATURE CALLS FOR HEATING, THE ELECTRIC HEATER SHALL ENERGIZE.
4. WHEN ROOM TEMPERATURE IS SATISFIED, THE ELECTRIC HEATER SHALL DE-ENERGIZE.
5. ALL THERMOSTAT SET-POINTS SHALL BE ADJUSTABLE.

AIR CONDITIONING UNIT No. 2 & 3 CONTROL

1. UNIT SHALL HAVE AN INTERNAL SWITCH WITH THE FOLLOWING SETTINGS:
   "FAN ONLY" WHICH SHALL OPERATE UNIT ON LOW FAN SPEED.
   "LOW COOL" WHICH SHALL OPERATE UNIT ON LOW FAN SPEED FOR COOLING.
   "HIGH COOL" WHICH SHALL OPERATE UNIT ON HIGH FAN SPEED FOR COOLING.
   "LOW HEAT" WHICH SHALL OPERATE UNIT ON LOW FAN SPEED FOR HEATING.
   "HIGH HEAT" WHICH SHALL OPERATE UNIT ON HIGH FAN SPEED FOR HEATING.
2. UNIT SHALL ALSO BE EQUIPPED WITH TEMPERATURE CONTROL.

FOR REFERENCE ONLY
DGS# PH-582-232-002
HVAC Upgrades, MSP Barrack -H-
AUGUST 2023

DEPARTMENT OF STATE POLICE

CAPITAL PROJECT OFFICER — DATE 11-4-98

DEPARTMENT OF GENERAL SERVICES APPROVAL

PROJECT ADMINISTRATOR — DATE 10/30/98

DIRECTOR, ENGR. AND CONST. — DATE 11/6/98

NO.	DATE	REVISIONS

Construction of New Police Barrack
Maryland State Police, Barrack H
LaPlata, Maryland
~~D.G.S Project # PH 000 971 001~~

S.C. Burdette & Associates — Public Safety Consultant
2123 Maryland Avenue
Baltimore, Maryland 21218
(410) 547-6636

Carroll Engineering, Inc. — Civil Structural Engineers
61 Padonia Road, East, Suite C
Timonium, Maryland 21093
(410) 252-6211

Gipe Associates — Mechanical Electrical Engineers
Dulaney Center I, Suite 102
849 Fairmount Avenue
Baltimore, Maryland 21286
(410) 832-2420

Mahan Rykiel Associates — Landscape Architects
1330 Smith Avenue
Baltimore, Maryland 21209
(410) 435-1700

Cullimore Clarke Associates Architects
923 N. Calvert Street
Baltimore, Maryland 21202
TEL 410.752.3720
FAX 410.752.4823

DRAWING TITLE: CONTROL DIAGRAMS

PROJECT NO: 9757
DATE: 10-7-98
REVISIONS:
DRAWING NO: M-14

STATE OF MARYLAND — MICHAEL JOHN PURTELL — No. 19584 — REGISTERED PROFESSIONAL ENGINEER

MJP 97185M14.DWG
PCG 10/05/98

5-2343