R. L. Cranford, Inc.
Plumbing Contractor

6404 Old Solomons Island Road
Tracys Landing, MD 20779
(301)855-7108 fax (301)855-3410
cranfordplumbing@aol.com

BALL VALVES

NIBCO S-585-70

Bronze Ball Valves

Two-Piece Body • Full Port • Bronze Trim • Blowout-Proof Stem

Dezincification Resistant

600 PSI/41.4 Bar Non-Shock Cold Working Pressure
150 PSI/10.3 Bar Saturated Steam◆

T-585-70
Threaded

S-585-70
Solder

CONFORMS TO MSS SP-110

MATERIAL LIST

	PART	SPECIFICATION
1.	Handle Nut	Zinc Plated Steel
2.	Handle	Zinc Plated Steel Clear Chromate Plastisol Coated
3.	Threaded Pack Gland	Brass ASTM B 16 Alloy C36000
4.	Packing	PTFE
5.	Stem	Silicon Bronze ASTM B 371 Alloy C69300 or ASTM B 99 Alloy C65100
6.	Thrust Washer	Reinforced PTFE
7.	Ball	Brass ASTM B 124 Alloy C37700 or ASTM B16 Alloy C36000 EACH with Hard Chrome Plate
8.	Seat Ring (2)	Reinforced PTFE
9.	Body	Cast Red Bronze ASTM B 584 Alloy C84400
10.	Body End Piece	Cast Red Bronze ASTM B 584 Alloy C84400

¼" size only has a 304 stainless steel grounding washer.

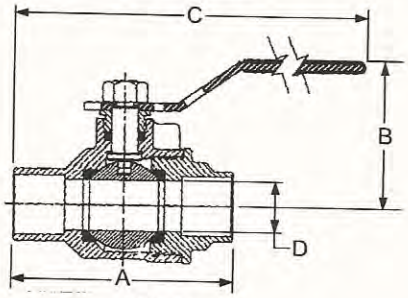

S-585-70
C x C

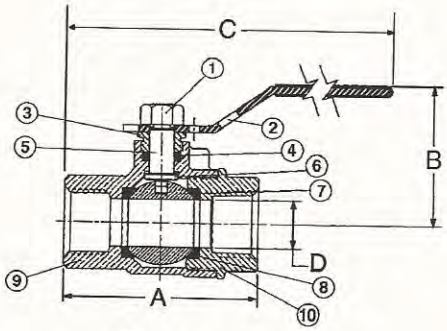

T-585-70
NPT x NPT

DIMENSIONS—WEIGHTS—QUANTITIES

Size In.	Size mm.	Dimensions T-585-70 A In.	T-585-70 A mm.	S-585-70 A In.	S-585-70 A mm.	B In.	B mm.	T-585-70 C In.	T-585-70 C mm.	S-585-70 C In.	S-585-70 C mm.	D In.	D mm.	T-585-70 Lbs.	T-585-70 Kg.	S-585-70 Lbs.	S-585-70 Kg.	Master Ctn. Qty.
¼	8	2.00	51	1.75	44	1.75	44	5.00	127	4.75	121	.38	10	.45	.21	.42	.19	100
⅜	10	2.00	51	1.84	47	1.75	44	5.00	127	4.81	122	.38	10	.45	.21	.42	.19	100
½	15	2.44	62	2.56	65	1.88	48	5.19	132	5.25	133	.50	13	.64	.29	.60	.27	100
¾	20	2.94	75	3.25	82	2.25	57	6.25	159	6.25	159	.75	19	1.33	.60	1.27	.58	50
1	25	3.34	85	3.75	95	2.38	60	6.44	164	6.63	168	1.00	25	1.79	.81	1.72	.78	40
1 ¼	32	4.19	106	5.06	128	3.00	76	6.75	171	7.19	183	1.25	32	3.12	1.41	3.18	1.44	20
1 ½	40	4.72	120	5.99	151	3.16	80	9.06	230	9.69	246	1.50	38	4.78	2.17	5.12	2.32	10
2	50	5.16	131	6.72	170	3.50	89	9.25	235	10.06	256	2.00	51	6.68	3.03	7.10	3.22	8

Note: Solder end is designed to be soft-soldered into lines using solders with the melting point not exceeding 500°F. Higher temperature solders will damage the seat material. See installation sheet packaged with valves.

◆ For detailed Operating Pressure, refer to Pressure Temperature Chart on page 41.

R. L. Cranford, Inc.
Plumbing Contractor

6404 Old Solomons Island Road
Tracys Landing, MD 20779
(301)855-7108 fax (301)855-3410
cranfordplumbing@aol.com

ABOVVE GROUND SOIL AND WASTE PIPING

ABOVE GROUND VENT PIPING

CHARLOTTE NO-HUB PIPE

IDEAL TRIDON HD NO-HUB BANDS

CHARLOTTE
PIPE AND FOUNDRY COMPANY

SUBMITTAL FOR CHARLOTTE PIPE® HUBLESS CAST IRON SOIL PIPE AND FITTINGS

Date: 8/15/2017

Job Name: SHA PRINCE FREDERICK Location: PRINCE FREDERICK

Engineer: Contractor:

Scope:
This specification covers Hubless Cast Iron pipe, fittings, and couplings used in sanitary drain, waste and vent (DWV), sewer, and storm drainage applications. This system is intended for use in non-pressure applications.

Specification:
Hubless Cast Iron pipe and fittings shall be manufactured from gray cast iron and shall conform to ASTM A 888 and CISPI Standard 301. All pipe and fittings shall be marked with the collective trademark of the Cast Iron Soil Pipe Institute® and listed by NSF® International. Hubless Couplings shall conform to CISPI Standard 310, shall be manufactured in the United States, and be certified by NSF® International. Heavy Duty and Medium Duty couplings shall conform to ASTM C 1540, shall be manufactured in the United States, and shall be used if indicated.

Installation:
Installation shall comply with the latest installation instructions published by Charlotte Pipe and Foundry Company® and shall conform to all applicable plumbing, fire, and building code requirements. The system shall be hydrostatically tested after installation to 10 ft. of head (4.3 psi maximum). **WARNING!** Never test with or transport/store compressed air or gas in Cast Iron pipe or fittings. Doing so can result in explosive failures and cause severe injury or death.

Referenced Standards:

ASTM C 564:	Rubber Gaskets for Cast Iron Soil Pipe and Fittings
CISPI 301:	Hubless Cast Iron Soil Pipe and Fittings
CISPI 310:	Hubless Couplings for Cast Iron Soil Pipe and Fittings
ASTM C 1277:	Hubless Couplings
ASTM C 1540:	Hubless Medium Duty and Heavy Duty Couplings

MADE IN USA

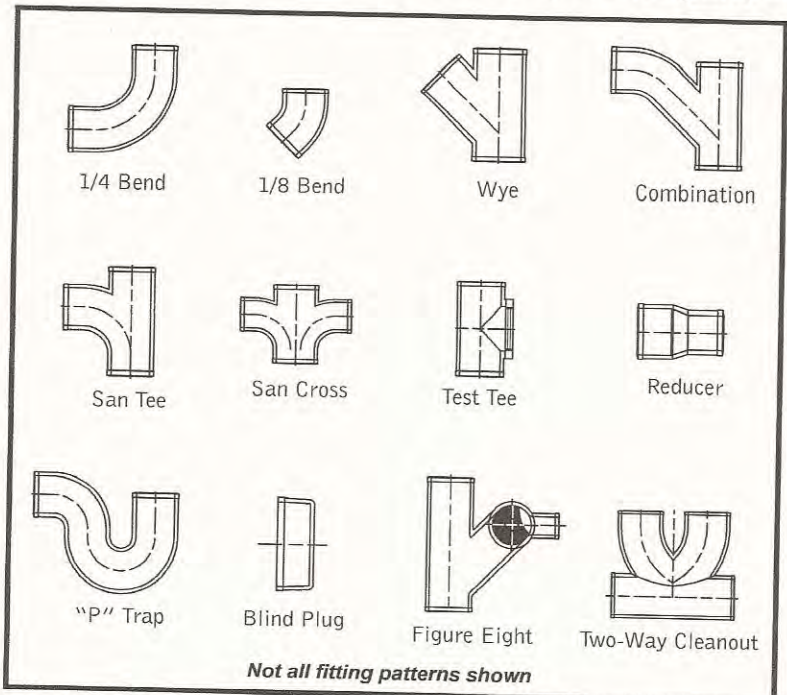

Not all fitting patterns shown

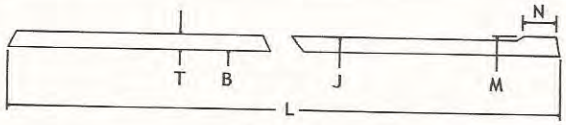

TABLE 1
DIMENSIONS AND TOLERANCES (IN INCHES) OF SPIGOTS AND BARRELS FOR NO-HUB PIPE AND FITTINGS

Size	Inside Barrel Diameter B	Outside Diameter Barrel J	Outside Diameter Spigot M	Width Spigot Bead N (±.13)	Thickness of Barrel T-Nom.	Thickness of Barrel T-Min.	Gasket Positioning Lug W
1½	1.50 ± .09	1.90 ± .06	1.96 ± .06	.25	.16	.13	1.13
2	1.96 ± .09	2.35 ± .09	2.41 ± .09	.25	.16	.13	1.13
3	2.96 ± .09	3.35 ± .09	3.41 ± .09	.25	.16	.13	1.13
4	3.94 ± .09	4.38 + .09 − .05	4.44 ± .09	.31	.19	.15	1.13
5	4.94 ± .09	5.30 + .09 − .05	5.36 ± .09	.31	.19	.15	1.50
6	5.94 ± .09	6.30 + .09 − .05	6.36 ± .09	.31	.19	.15	1.50
8	7.94 ± .13	8.38 ± .09	8.44 ± .09	.31	.23	.17	2.00
10	10.00 ± .13	10.56 ± .09	10.62 ± .09	.31	.28	.22	2.00
12	11.94 ± .09	12.50 ± .13	12.62 ± .13	.31	.28	.22	2.75
15	15.11 ± .09	15.83 ± .13	16.12 ± .13	.31	.36	.30	2.75

Note: *Charlotte Pipe does not recommend or warrant installations joined with unshielded hubless couplings.*

Charlotte Pipe and Foundry Company • P.O. Box 35430 Charlotte, NC 28235 • (800) 438-6091 • www.charlottepipe.com

Charlotte Pipe and Charlotte Pipe and Foundry Company are registered trademarks of Charlotte Pipe and Foundry Company.

FO-SUB-CI-NH (7-20-16)

SUBMITTAL
HEAVY-DUTY "HD"
NO-HUB COUPLINGS

Date

Architect | **Project**

Contractor | **Engineer**

The patented IDEAL-TRIDON Heavy-Duty "HD" No-Hub Couplings are engineered to connect no-hub cast iron pipe in applications replacing the less-efficient hub & spigot material. The Coupling consists of an elastomeric compound gasket (ASTM C-564) housed inside a 304 stainless steel corrugated shield. Depending on the size of the shield, (4) or (6) 304 stainless steel clamps surround the shield and provide the sealing force. The 3/8" hex-head screws are made from 305 stainless-steel. The IDEAL-TRIDON Heavy-Duty "HD" No-Hub Couplings are available in sizes ranging from 1 1/2" – 10". The couplings are designed to be torqued to 80 in-lbs. The entire coupling is corrosion resistant. Conforms to ASTM C1540.

Heavy-Duty "HD" No - Hub Couplings

Size	Part No.	Installation Torque Inch Pounds	No. of Clamps Per Coupling
1 1/2"	6217H8G	80	4
2"	6218H8G	80	4
3"	6219H8G	80	4
4"	6220H8G	80	4
5"	6221H8G	80	6
6"	6222H8G	80	6
8"	6223H8G	80	6
10"	6230H8G	80	6

The Design

The IDEAL-TRIDON Heavy-Duty "HD" No-Hub Couplings have been re-engineered to install with 80 in-lbs. of screw torque and boasts an ultimate torque rating exceeding 100 in/lbs. Our patented, extra wide bi-directional shield is now constructed with a heavier gauge stainless steel. The mechanically interlocked 9/16" wide clamps have also been augmented with a heavier gauge stainless steel and a 3/8" hex-head screw. These changes, teamed with our specially beaded gasket, enable our new Heavy-Duty "HD" coupling to exert exceptional hold on the pipe for a positive, reliable seal. Conforms to ASTM C1540.

The Gasket

Made from high-quality elastomeric compound (ASTM C-564), the IDEAL-TRIDON No-Hub gasket features a pattern of multiple thick sealing sectors and adjacent groove sectors laterally spaced. When the clamps are tightened, this pattern permits the clamping bands and the shield to form a restriction impeding the movement of the shield relative to the gasket.

The Shield

0.008" thick type 304 stainless steel green shield requires less band load to transfer pressure to the gasket, leaving more clamping load in reserve to compress the gasket. The patented, bi-directional corrugations create clamp sealing pressure in both parallel and transverse patterns on the gasket and pipe, thereby avoiding pull-out failures, and providing a positive, reliable seal.

The Clamps

Heavy-duty 304 stainless steel clamps and 3/8" hex-head 305 screws provide the sealing force. 1-½" through 4" couplings use four (4) clamps; 5" through 10" couplings use six (6) clamps. The entire assembly is corrosion resistant.

03/05/12 BB

HEAVY-DUTY "HD" NO-HUB COUPLINGS
Product Information Submittal
for No-Hub Systems

TEST	GASKET PHYSICAL TEST MIN. OR MAX. REQUIREMENTS	ASTM METHOD
Tensile Strength	1500 psi min.	D 412
Elongation	250 min.	D 412
Durometer (Shore A)	70 +/-5 @ 76°F +/- 5°F	D 2240
Accelerated Aging	15% maximum tensile and 20% maximum elongation, 10 points maximum increase in hardness, all determinations after oven aging for 96 hours at 158°F	D 573
Compression Set	25% max. after 22 hours at 158°F	D 395 Method B
Oil Immersion	80% max. volume change after immersion in IRM 903 for 70 hours at 212°F.	D 471
Ozone Cracking	No visible cracking at 2 times magnification of the gasket after 100 hours exposure in 1.5 ppm ozone concentration at 104°F. Testing and inspection to be on gasket which is loop mounted to give approximately 20% elongation of outer surface.	D 1149
Tear Resistance	150 lbf /in. min.	D 624
Water Absorption	20% max. by weight after 7 days at 158°F	D 471

MATERIALS	
Clamp:	Type 304 AISI stainless steel
Screw:	Type 305 AISI stainless steel 3/8" hex head/shoulder
Shield:	Type 304 AISI stainless steel, corrugated. Shield thickness 0.008"
Gasket:	The gasket is made of an elastomeric compound that meets the requirements of ASTM C-564.

The IDEAL-TRIDON patented Heavy-Duty "HD" No-Hub Coupling has been engineered to provide a heavy-duty, all stainless steel coupling; balancing the desire for a more rigid joint with the need to provide a superior, positive seal which can accommodate possible disparities in the mating of No-Hub pipe and fittings. This has been accomplished by manufacturing our Ideal patented No-Hub Heavy-Duty "HD" coupling with a heavy-duty corrugated shield of sufficient width to accommodate additional surface-bearing sealing clamps.

The additional sealing clamps, when torqued to 80 in-lbs., deliver additional performance benefits. First, the overall dimensional thickness of the clamp and shield, in conjunction with the additional width of the coupling, result in a more uniformly rigid joint, with the load being supported at both the outer edge of the coupling and the centerline of the joint. Second, the additional sealing clamps yield increased surface-bearing contact between the coupling and the pipe or fittings, thereby inhibiting joint movement at higher internal pressures not commonly associated with DWV systems.

The 1 1/2", 2", 3" and 4" diameter couplings consist of a 3" wide bi-directional, corrugated 304 stainless steel shield in conjunction with four (4) stainless steel clamps mounted in a series, secured in place by means of fixed and "floating" eyelets to allow the clamp "travel" during tightening. The 5", 6" 8" and 10" couplings consist of a 4" corrugated 304 stainless steel shield and six (6) stainless steel clamps.

All IDEAL-TRIDON patented Heavy-Duty "HD" No-Hub Couplings are designed to be installed with a pre-set torque wrench calibrated at 80 in-lbs. to accommodate the 305 stainless steel 3/8" hex-head/shoulder screw.

Country of Origin - USA

03/05/12 BB

R. L. Cranford, Inc.
Plumbing Contractor

6404 Old Solomons Island Road
Tracys Landing, MD 20779
(301)855-7108 fax (301)855-3410
cranfordplumbing@aol.com

PIPE INSULATION

NOMALOK ELASTOMERIC 1" THICK

NOMACO Insulation

NOMALOCK®

Made with up to 100% post industrial recycled product

Home Innovation NGBS GREEN CERTIFIED

Made in USA

DESCRIPTION

NOMALOCK® is a self-sealing, flexible, polyolefin, thermal insulation and is black in color. It is available in wall thicknesses of 3/8", 1/2", 3/4" and 1", in sizes ranging from 3/8" CTS to 4" IPS. NOMALOCK® is manufactured using NRG5 technology, which for the first time, enables consistent high quality processing of up to 100% recycled post-industrial and post-consumer use polyolefin material. The creation of the ***NRG5 technology*** platform incorporates sustainability principals of **recycling** and **reuse** of materials, **reduction** of virgin raw materials and total material content, **re-engineering** of complex formulations and **re-design** of processes and products to minimize environmental impact.

APPLICATIONS

NOMALOCK® is used to retard heat gain and prevent condensation or frost formation on cold water plumbing, chilled-water and air conditioning lines. NOMALOCK® also retards heat loss on hot water plumbing.

NOMALOCK® has a low thermal conductivity and very low water vapor transmission rate. This low density product demonstrates excellent thermal, physical and chemical resistant properties and has a broad service temperature range between -330°F and 210°F (-201°C and 99°C). It can be installed in commercial, industrial and residential insulation projects. Acceptable for use with heat tracing/heat tape.

INSTALLATION

NOMALOCK® is pre-slit with factory applied pressure sensitive adhesive (PSA) to both seam surfaces and has convenient built-in release tabs for easy installation: slip on the tube, pull the tab, and pinch it shut. It can be easily pushed around P-traps and fittings, though mitering is recommended for optimum performance. All butt joints should be sealed with 320 or 620 (black) Contact Adhesive or other approved sealing system. It is easily cut with a sharp knife. NOMALOCK® is available in a wide range of I.D.s and is sized to fit over copper couplings and fittings. It should be installed on pipes that have been pre-tested for leaks, are not presently hot, and have application temperatures that will not exceed 210°F (99°C).

OUTDOOR APPLICATIONS

NOMALOCK® pipe insulation is made from UV resistant polyolefin resins. For severe UV exposure (rooftop applications) or where optimum performance is required, the product must be protected from the elements. Various jacketing or cladding materials are recommended, ie. PVC, CPVC, AL, etc. If coatings are going to be used, please refer to technical bulletin for recommended coatings.

UNDERGROUND

For buried lines above the water table, use a clean fill such as sand (3" - 5" layer) to protect NOMALOCK® before backfilling. It is recommended to use a minimum 1" wall thickness and the materials to be buried are properly sealed at all seams and butt joints with an approved contact adhesive. For optimum performance, the lines should be encased in a conduit to protect them from problems associated with ground water. *Note: All Nomaco Insulation products must always be installed above the water table.*

RESISTANCE TO MOISTURE VAPOR FLOW

The closed-cell structure and unique formulation of NOMALOCK® effectively retards the flow of moisture vapor, and is considered a low transmittance vapor retarder. For most indoor applications, NOMALOCK® needs no additional protection. Additional vapor barrier protection may be necessary for NOMALOCK® when installed on low temperature surfaces that are exposed to continuous high humidity.

FLAME AND SMOKE RATING

NOMALOCK® in wall thicknesses of 1" (25 mm) and below has a flame spread rating of 25 or less and a smoke development rating of 50 or less as tested by ASTM E 84 Method of Testing entitled: "Surface Burning Characteristics of Building Materials." NOMALOCK® is acceptable for use in duct/plenum applications meeting the requirements of NFPA 90A/90B. *Numerical flammability ratings alone may not define the performance of products under actual fire conditions. They are provided only for use in the selection of products to meet limits specified, when compared to a known standard.*

SPECIFICATION COMPLIANCE

- ASTM C 1427, Type 1, Grade 1
- ASTM E 84 1" 25/50
- Specification Compliance ASTM C 1427, NFPA 90 A/B.
- Dade Co., Fl., Product Control Approved, Acceptance 95-1215.08
- New York City OTCR #13-09 USDA Requirements
- Sound transmission co-efficient = 11 at 1" per ASTM E90
- City of Los Angeles, Gen. Approval, Research Report RR 8316
- Greenguard Gold Certified (formerly children & schools)
- Approved as being eligible to contribute points toward a building under the National Green Building Standard

FEATURES

- CFC/HCFC Free
- Non-porous
- Low VOCs
- Halogen Free
- Fiber Free
- Resistant to mold growth

Manufactured with NRG5 Technology

Manufactured with NRG5 Technology

NOMALOCK®

Physical Properties

		NOMALOCK® Insulation	Test Methods
Thermal Conductivity (K) BTU -in/hr - Ft² - °F (W/mK)	90°F (32°C) Mean Temp	.255 (.037)	ASTM C 177/C 518
	75°F (24°C) Mean Temp	.250 (.036)	ASTM C 177/C 518
	50°F (10°C) Mean Temp	.245 (.035)	ASTM C 177/C 518
Operating Temperature Range	Upper	210°F (99°C)	
Flexible to -100°F (-73°C)	Lower	-330°F (-201°C)	
Water Vapor Permeability Dry Cup. Perm-In		0.0	ASTM E 96
Ozone Resistance		Pass	ASTM D 1171
Chemical/ Solvent Resistance		Good	
Mildew Resistance/Air Erosion		Pass	UL 181

Thickness Recommendations* - To Control Condensation

Pipe Size	Line Temp 50°F		Line Temp 35°F		Line Temp 0°F		Line Temp -20°F	
		10°C		2°C		-18°C		-29°C
Normal Conditions (Max 85°F, 29°C - 70% R.H.)								
3/8" I.D. thru 1-3/8"	3/8"	10 mm	1/2"	13 mm	3/4"	19 mm	1"	25 mm
Over 1-3/8" thru 3-1/8"	3/8"	10 mm	1/2"	13 mm	1"	25 mm	1"	25 mm
Over 3-1/8" thru 4-1/2"*	3/8"	10 mm	1/2"	13 mm	1"	25 mm	1"	25 mm
Over 4-1/2"	1/2"	13 mm	3/4"	19 mm	1"	25 mm	1-1/4"	32 mm
Mild Conditions (Max 80°F, 26°C - 50% R.H.)								
3/8" I.D. thru 2-1/8"	3/8"	10 mm	3/8"	10 mm	1/2"	13 mm	1/2"	13 mm
Over 2-1/8" thru 3-1/8"	3/8"	10 mm	3/8"	10 mm	1/2"	13 mm	1/2"	13 mm
Over 3-1/8" thru 4-1/2"*	3/8"	10 mm	3/8"	10 mm	3/4"	19 mm	3/4"	19 mm
Over 4-1/2"	3/8"	10 mm	1/2"	13 mm	3/4"	19 mm	3/4"	19 mm
Severe Conditions (Max 90°F, 32°C - 80% RH)								
3/8" I.D. thru 1-1/8" I.D.	3/4"	19 mm	3/4"	19 mm	1-1/4"	32 mm	1-1/4"	32 mm
Over 1-1/8" I.D. thru 4-1/2"	3/4"	19 mm	1"	25 mm	1-1/2"	38 mm	1-1/2"	38 mm
Over 4-1/2"	3/4"	19 mm	1"	25 mm	1-1/2"	38 mm	2"	50 mm

NOMALOCK® in thickness noted within the specified temperature ranges will prevent condensation on indoor piping under design conditions defined below.
Thickness recommendations above 1" can be sleeved to achieve thickness desired.
Normal: Maximum severity of indoor conditions seldom exceed 85°F and 70% R.H. in United States.
Mild: Typical conditions are most air-conditioned spaces and arid climates.
Severe: Generally found in areas where excessive moisture is introduced or in poorly ventilated areas where the temperature may be depressed below the ambient.
Under conditions of high humidity, additional thickness of insulation may be required.
*Available: Nom. 1/2" or Nom. 3/4" thickness only.

NOMALOCK® "R" Values

Pipe O.D. or Nominal Insulation I.D.		R Value 3/8" (10 mm) Wall	R Value 1/2" (13 mm) Wall	R Value 3/4" (19 mm) Wall	R Value 1" (25 mm) Wall
3/8"	10 mm	3.1	4.2	6.6	9.3
1/2"	13 mm	2.8	3.7	6.0	8.5
5/8"	16 mm	2.8	3.5	5.6	7.9
3/4"	19 mm	2.6	3.4	5.4	7.6
7/8"	22 mm	2.5	3.3	5.1	7.2
1-1/8"	29 mm	2.4	3.1	4.8	6.8
1-3/8"	35 mm	2.3	3.2	4.9	6.8
1-5/8"	41 mm	2.3	2.9	4.5	6.2
2"	50 mm	2.0	2.6	4.1	5.7
2-1/8"	54 mm	2.3	2.9	4.3	6.0
2-3/8"	62 mm	2.0	2.6	4.0	5.5
2-5/8"	67 mm	2.3	2.8	4.2	5.7
2-7/8"	72 mm	2.0	2.5	3.8	5.3
3-1/8"	79 mm	2.3	2.8	4.1	5.5
3-1/2"	89 mm	2.0	2.5	3.7	5.1
3-5/8"	92 mm	2.8	2.8	4.0	5.5
4-1/8"	105 mm	2.8	2.8	4.0	5.4
4-1/2"	115 mm	1.9	2.4	3.6	4.9

NOMACO Insulation
3006 Anaconda Road • Tarboro, NC 27886 • p 866.876.2684 • f 866.876.2688 • www.nomacoinsulation.com

©November 2013 The GREENGUARD INDOOR AIR QUALITY CERTIFIED® Mark is a registered certification mark used under license through the GREEN-GUARD Environmental Institute

R. L. Cranford, Inc.
Plumbing Contractor

6404 Old Solomons Island Road
Tracys Landing, MD 20779
(301)855-7108 fax (301)855-3410
cranfordplumbing@aol.com

GAS PIPING

SCHEDULE 40 BLACK STEEL PIPE

VIAGA MEGA PRESS FITTINGS

Wheatland Tube Company
1 Council Avenue P.O. Box 608
Wheatland, PA 16161-0608
800.257.8182
www.wheatland.com

Wheatland ASTM A 53 Schedule 40 and Schedule 80 Pipe

Wheatland Steel Pipe is made by specialists who understand that it's the small details that make the difference between average products and superior products. At the Wheatland Plant, most department heads and foremen have been employed in some phase of pipe manufacturing for 25 or more years.

This kind of specialization, experience and knowledge pays off...in workable, threadable, uniform pipe. Delivered clean. Delivered promptly.

Wheatland specializes in manufacturing welded steel pipe in 1/2 through 4 nominal sizes. Available inventory in 1/8 to 12 pipe sizes produced to various ASTM standards is maintained to meet your pipe requirements.

Care, pride and personal concern are bonus features that go into every inch of Wheatland Pipe. Don't settle for less.

Make sure it's quality. Make sure it's Wheatland.

Standard Pipe Schedule 40 ASTM A 53 Grades A and B

NPS Designator	DN Designator	Outside Diameter		Inside Diameter		Wall Thickness		Nominal Weight (Mass) per unit Length			
		(Inches)	(mm)	(Inches)	(mm)	(Inches)	(mm)	Plain End (lb/ft)	Plain End (kg/m)	Threads & Coupling (lb/ft)	Threads & Coupling (kg/m
1/8	6	0.405	10.3	0.269	6.8	0.068	1.73	0.24	0.37	0.25	0.37
1/4	8	0.540	13.7	0.364	9.2	0.088	2.24	0.43	0.63	0.43	0.63
3/8	10	0.675	17.1	0.493	12.5	0.091	2.31	0.57	0.84	0.57	0.84
1/2	15	0.840	21.3	0.622	15.8	0.109	2.77	0.85	1.27	0.86	1.27
3/4	20	1.050	26.7	0.824	20.9	0.113	2.87	1.13	1.69	1.14	1.69
1	25	1.315	33.4	1.049	26.6	0.133	3.38	1.68	2.50	1.69	2.50
1-1/4	32	1.660	42.2	1.380	35.1	0.140	3.56	2.27	3.39	2.28	3.40
1-1/2	40	1.900	48.3	1.610	40.9	0.145	3.68	2.72	4.05	2.74	4.04
2	50	2.375	60.3	2.067	52.5	0.154	3.91	3.66	5.44	3.68	5.46
2-1/2	65	2.875	73.0	2.469	62.7	0.203	5.16	5.80	8.63	5.85	8.67
3	80	3.500	88.9	3.068	77.9	0.216	5.49	7.58	11.29	7.68	11.35
3-1/2	90	4.000	101.6	3.548	90.1	0.226	5.74	9.12	13.57	9.27	13.71
4	100	4.500	114.3	4.026	102.3	0.237	6.02	10.80	16.07	10.92	16.23
5	125	5.563	141.3	5.047	158.2	0.258	6.55	14.63	21.77	14.90	22.07
6	150	6.625	168.3	6.065	154.1	0.280	7.11	18.99	28.26	19.34	28.58
8	200	8.625	219.1	7.981	202.7	0.322	8.18	28.58	42.55	29.35	43.73
10	250	10.750	273.0	10.020	254.5	0.365	9.27	40.52	60.29	41.49	63.36
Standard Pipe											
12[1]	300	12.750	323.8	12.000	304.8	0.375	9.52	9.61	3.78	51.28	76.21
Note[1] NPS 12 dimensions are for standard wall pipe, not schedule 40.											

Product Type and Specification:
Standard welded pipe is produced in 1/2 to 6 trade sizes. Wheatland pipe is produced to ASTM A 53 Grades A and B, A 501, and A 589 Type II, API 5L and Federal Specification WW-P404. All pipe threads conform to ANSI B1.20.1. Merchant couplings comply with ASTM A 865.

Specifications and descriptions are accurate as known at time of publication and subject to change without notice.

Wheatland ASTM A 53 Grades A & B Schedule 40 Pipe

Submittal Package

viega

Viega MegaPress® and MegaPressG Fitting System

- ☐ Chilled Water
- ☐ Hydronic Heating
- ☐ Fire Protection
- ☐ Low Pressure Steam
- ☐ Heating Fuel Oil
- ☑ Natural Gas
- ☐ Compressed Air

Viega LLC, 100 N. Broadway, 6th Floor • Wichita, KS 67202 • Ph: 800-976-9819 • Fax: 316-425-7618

Submittal Package

viega

System Data Sheet

System Description
Viega MegaPress and MegaPressG are safe, reliable, and economical steel pipe installation systems that use modern cold press connection technology for a wide assortment of more than 200 fittings in dimensions ranging from ½" to 2".

Pipe: Schedule 5 to schedule 40 Black steel pipe from ½" to 2" for Viega MegaPress. Schedule 40 black pipe for Viega MegaPressG.

Viega Smart Connect feature: By means of the Smart Connect feature on Viega MegaPress Systems fittings, an unpressed connection can be recognized by escaping water, or by a drop in pressure, when testing the system. Fitting connections without the Smart Connect feature may not leak initially; however, later they can unseat during system operations. The Smart Connect feature is designed to protect from the potential risk of unpressed fittings.

Applications
All piping must comply with the ASTM A53, A135, A795 and A106 standards. Viega MegaPress and MegaPressG fittings are approved for installations in both above and below ground applications. Per code, local inspector approval must be obtained prior to installation below ground.

Approved Applications:
- Hydronic heat
- Chilled water
- Compressed Air
- Non Medical Gases
- Fire Sprinkler
- Low Pressure Steam
- Vacuum
- Natural Gas
- LP Gas
- Fuel Oil

System Benefits
- Fast and Easy to Use
- Flameless
- Permanent Connections
- Wide Capacity from ½" to 2"
- Large Selection of Fittings
- Consistent Professional Appearance
- Less Equipment Required
- Environmentally Friendly Connection System
- Versatility of Fittings and Tools for Variety of Applications

Fittings
Viega MegaPress and MegaPressG fittings are offered in 200+ configurations including: Elbows, Couplings, Reducers, Tees, Reducing Tees, Threaded Adapters and Unions.

Tools
RIDGID offers pressing tools for connecting MegaPress fittings.
- 330-C Corded Tool (½" to 2")
- 330-B Battery powered Tool (½" to 2")
- 320-E
- RP 340
- CT-400
- ½" to 4" fittings are pressed in 4-7 sec.

RIDGID Pressing Tools		
Model	330C	330B
Volts	120v	14.4v Battery
Amps	5.2A	27.2A
Weight (w/out jaw)	9 lbs.	10 lbs.

History
Press technology has been used in Europe since the late 1980s and in the U.S. since the late 1990s for a variety of applications. Backed by two plumbing leaders with over 175 years of combined excellence.

Operating Temperatures:
Viega MegaPress: 0°F - 250°F
Viega MegaPressG: -40°F - 180°F

Operating Pressures:
Viega MegaPress: 200 psi max
Viega MegaPressG: 125 psi max

Approvals and Certificates

Viega MegaPress
- UL 213
- FM Class 1920
- IAPMO PS117
- ICC LC1002
- CRN #OA14541.6
- ABS
- GL

Viega MegaPressG
- CSA LC-4
- IAPMO LC-4
- ICC LC-4
- CRN #OA14541.6
- ABS
- GL

Compliant with
- ICC International Plumbing Code
- ICC International Mechanical Code
- UPC Uniform Plumbing Code
- UMC Uniform Mechanical Code
- International Fuel Gas Code
- NFPA 13,13D, 13R, 31, 54 and 58
- ASME B31

Contact your local Viega representative for details on local approvals

For more information on RIDGID products contact:
Ridge Tool Company
400 Clark Street, Elyria, Ohio 44036
Demos, Literature: 800-769-7743
Technical inquiries: 800-519-3456
Availability: 888-743-4333
Web: www.ridgid.com

Submittal Package

viega

Product Instructions

Read and understand all instructions for installing Viega MegaPress and MegaPressG fittings. Failure to follow all instructions may result in extensive property damage, serious injury, or death.

Note: Tubing shall be free of surface imperfections.

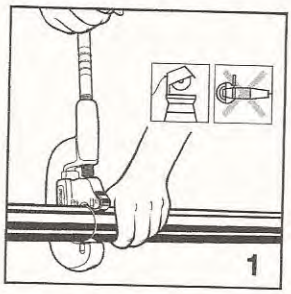

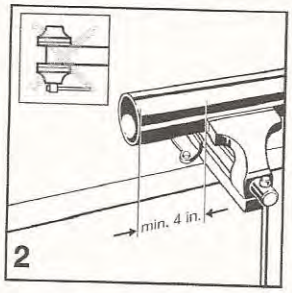

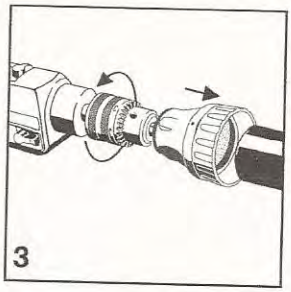

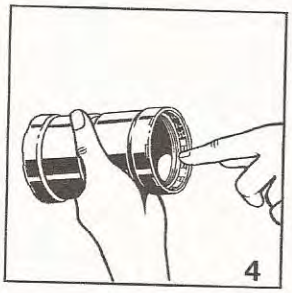

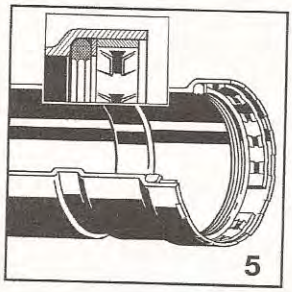

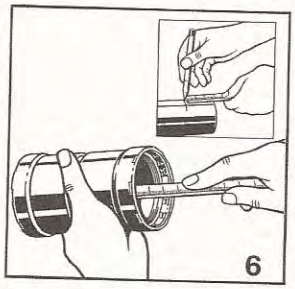

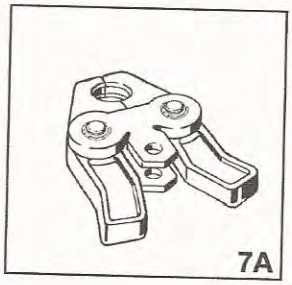

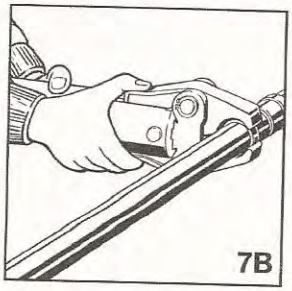

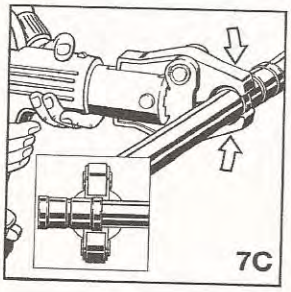

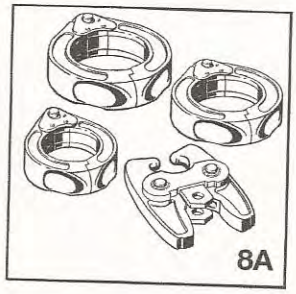

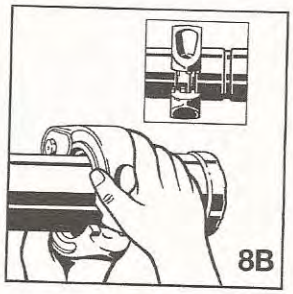

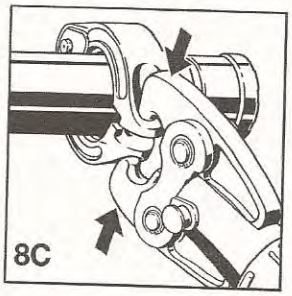

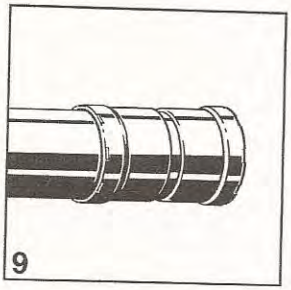

Viega LLC, 100 N. Broadway, 6th Floor • Wichita, KS 67202 • Ph: 800-976-9819 • Fax: 316-425-7618

Submittal Package

viega

Megapress Viega Limited Warranty

Subject to the conditions and limitations in this Limited Warranty, Viega LLC (Viega) warrants to end users, installers, and distribution houses that its Viega MEGAPRESS metal press fittings (Viega Product) with application appropriate sealing element when properly installed shall be free from failure caused by manufacturing defects for a period of ten (10) years from date of installation in Viega MEGAPRESS Approved Applications for fluids/water, oil and lubricant, and gases under Viega specified system operating conditions.

Under this Limited Warranty, you only have a right to a remedy if the failure or leak resulted from a manufacturing defect in the Viega Product and the failure or leak occurs during the warranty period. You do not have a remedy under this warranty and the warranty remedy does not apply if the failure or any resulting damage is caused by (1) components other than those manufactured or sold by Viega, such as black iron pipe; (2) not designing, installing, inspecting, testing, or maintaining the Viega Product in accordance with Viega's installation and product instructions in effect at the time of installation and other specifications and approvals applicable to the installation; (3) use of Viega Product under non recommended system operating conditions, improper handling and protection of the Viega Product prior to, during and after installation, inadequate freeze protection, or exposure to environmental conditions not recommended for the application; or (4) acts of nature, such as, but not limited to, earthquakes, fire, or weather damage. In the event of a leak or other failure of the Viega Product covered by this warranty, it is the responsibility of the end user to take appropriate measures to mitigate any damage, to include making timely repairs. Only if the warranty applies will Viega be responsible for the remedy under this warranty. The part or parts which you claim failed should be kept and Viega contacted by writing to the address below or telephoning 1-877-843-4362 within thirty (30) calendar days after the leak or other failure and identifying yourself as having a warranty claim. You should be prepared to ship, at your expense, the product which you claim failed due to a manufacturing defect, document the date of installation, and the amount of the repair or replacement if performed by you. Within a reasonable time after receiving the product, Viega will investigate the reasons for the failure, which includes the right to inspect the product at a Viega location and reasonable access to the site of damage. Viega will notify you in writing as to the results of its review.

In the event that Viega determines that the failure or leak was the result of a manufacturing defect in the Viega Product covered by this warranty and this warranty applies, the EXCLUSIVE AND ONLY REMEDY under this warranty shall be the reimbursement for reasonable charges for repair or replacement of the Viega Product itself. VIEGA SHALL NOT BE LIABLE FOR ANY CONSEQUENTIAL OR OTHER DAMAGE (FOR EXAMPLE, ECONOMIC LOSS, WATER OR PROPERTY OR MOLD REMEDIATION) UNDER ANY LEGAL THEORY AND WHETHER ASSERTED BY DIRECT ACTION, FOR CONTRIBUTION OR INDEMNITY OR OTHERWISE.

THE ABOVE WARRANTY IS IN LIEU OF ALL OTHER WARRANTIES, EXPRESS OR IMPLIED, INCLUDING, BUT NOT LIMITED TO, THE IMPLIED WARRANTIES OF MERCHANTABILITY AND FITNESS FOR A PARTICULAR PURPOSE OR ANY STATUTE OF LIMITATIONS RELATING TO SUCH WARRANTIES. Other than this Limited Warranty, Viega does not authorize any person or firm to create for it any other obligation or liability in connection with its products.

This Limited Warranty gives you specific legal rights and you also may have other rights which may vary from state to state. This warranty shall be interpreted and applied under the law of the state in which the product is installed and is intended as a COMMERCIAL WARRANTY.

MEGAPRESS WARRANTY, 9/2011

Viega LLC, 100 N. Broadway, 6th Floor • Wichita, KS 67202 • Ph: 800-976-9819 • Fax: 316-425-7618

Submittal Transmittal Cover Sheet

7/16/2018

General Contractor; SE Davis Const. Contact: Jeff Holt, PM Address: P.O. Box 1008 La Plata MD, 20646 Phone: O 301-870-2400 email; jeff@sedavisconstruction.com	Owner; SHA Contact; Kimberly Triszczuk Address; District 5 Construction Phone; 410-474-4257 email; ktriszczuk@sha.state.md.us	Project; SHA Maintenance Bldg Address; Rte. 4 South Prince Frederick MD Phone: P.O.C.

GC Submittal #	
Subcontractor Submittal #	
Supplier(s):	R. L .Cranford Plumbing
Spec. # 221313 Dwg. P-101	Studor Plumbing vent
Section Title Sanitary Waste and	
Vent Piping	

General Contractors stamp/initials	Architects stamp
Engineers Stamp	

Date Received: 8/18/2017
Date Reviewed: 8/24/2017

Reviewed by: Thomas Ogden	**Work Order Number:** 90170-079
Submittal Number: 220523.12-01, 220719-01, 221116-01, 221316-01, 231123-01	**Contract Number:** CA1435129
Specification Number: 220523.12, 220719, 221116, 221316, 231123	**Project:** Prince Frederick Fire & Life Safety Phase 2
Specification Name: Ball Valves for Plumbing Piping, Plumbing Piping Insulation, Domestic Water Piping, Sanitary Waste and Vent Piping, Facility Natural Gas Piping	**Doc Id:** 19686

The following has been reviewed for general arrangement. Any approval is subject to compliance with all contract requirements. Detailed dimensions and quantities have not been checked.

Comments and Actions

ITEM	DESCRIPTION/COMMENT	ACTION
220523 – Ball Valves	Does not indicate compliance with B16.18, B31.9, NSF 61 or NSF 372.	RR
220716 – Piping Insulation	Approved	A
221116 – Domestic Water Piping	Approved	A
221316 – Vent Piping	Approved	A
224216 – Commercial Sinks	Approved	A
224216 - Faucets	Approved	A
224216 - P-Trap	Approved	A
224216 - Lav Supply	Approved	A
230517 - No Hub soil/vent Piping	Approved	A
230517 - Schedule 40 spec pipe	Approved	A
231123 - Press Fittings	Approved	A
231123 - Solder	Approved	A

Action Codes:

A– Approved	**AN** – Approved as noted
ANR – Approved as noted; return record copy	**RR** – Revise and resubmit
REJ – Rejected	**RA** – Receipt acknowledged

General Contractor: *Contact Name* Sue E. Davis *Firm Name* S E Davis Construction, LLC *Address* P.O. Box 1008, La Plata, MD 20646 *Telephone* 301-870-2400 *Email Address* sue@sedavisconstruction.com	*Contractor:* *Contact Name* Jeff Cranford *Firm Name* R L Cranford, Inc. *Address* 6404 Old Solomons Island Rd., Tracy's Landing, MD 20779 *Telephone* 301-855-7108 *Email Address* cranfordplumbing@aol.com	*Contact Name* Ryan James *Firm Name* State Highway Administration *Address* 138 Defense Highway, Annapolis, MD 21401 *Telephone* 443-532-5824 *Email Address* rjames@sha.state.md.us

GC Submittal №:	CA1435129-015400.01
Subcontractor:	R L Cranford
Supplier(s):	
Specification №/Dwg. Reference:	015400
Section Title:	Plumbing
Submittal Description/Items Submitted:	Kitchenette Fixtures Above Ground Domestic Water Piping Ball Valves Above Ground Soil and Waste Piping Pipe Insulation Gas Piping

General Contractor's Stamp	*Architect's Stamp*
Engineer's Stamp	

R. L. Cranford, Inc.
Plumbing Contractor

6404 Old Solomons Island Road
Tracys Landing, MD 20779
(301)855-7108 fax (301)855-3410
cranfordplumbing@aol.com

FIXTURE AND PIPING SUBMITTAL

FOR

BUILDING RENOVATIONS FOR FIRE CODE AND LIFE SAFETY COMPLIANCE

PHASE – 11

PRINCE FREDERICK, MD

R. L. Cranford, Inc.
Plumbing Contractor

6404 Old Solomons Island Road
Tracys Landing, MD 20779
(301)855-7108 fax (301)855-3410
cranfordplumbing@aol.com

KITCHENETTE P-1

JUST US-ADA-1821-A

CHICAGO 201-ACP FAUCET

US-ADA-1821-A - 18 GA.

UNDERMOUNT GROUP

ADA COMPLIANT
SINGLE COMPARTMENT

SUBMITTAL DATA

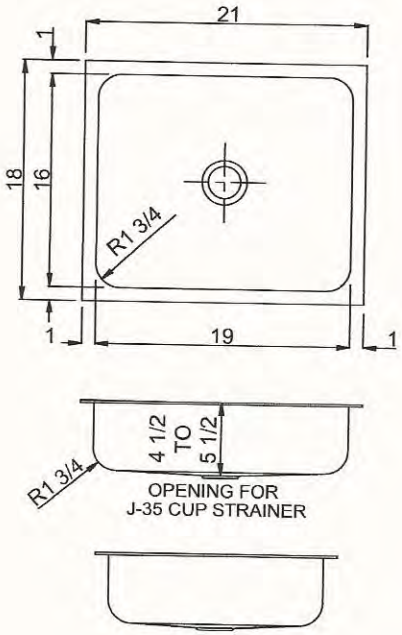

ADA COMPLIANT

SPECIFICATION

Seamless die-drawn construction of 18 gauge, type 304, 18-8 stainless steel. Interior and top surfaces polished to a non-porous Hand-Blended Just Finish with highlighted bowl rim. Smooth, fully coated underside insulates for sound and reduces condensation. Certified to ASME A112.19.3/CSA B45.4, Canadian Standards Association (CSA), Uniform Plumbing Code (UPC), International Plumbing Code (IPC), Americans with Disabilities Act (ADA). Drain punched for J-35 drain.

6.99 Gallon Capacity*

Capacity Matters

Max ID sizing with straight sided bowl configuration (non tapered sides). Tight corner radius design.

**Capacity is based on 5-1/2" Depths*

To Be Specified:			
DRAIN LOCATION:			
☐	CENTER (SHOWN)	☐	LEFT REAR
☐	RIGHT REAR	☑	CENTER REAR
LOCATIONS MUST BE A MINIMUM OF 4 1/2" FROM THE BOWL WALL.			
DEPTH* - MUST BE SPECIFIED:			
☐ 4 1/2" DEEP	☑ 5" DEEP	☐ 5-1/2" DEEP	

* The thickness of the surface material these sinks are mounted under may affect the maximum depth that can be used while maintaining deck height and knee clearances.

APPROVED FOR MANUFACTURING

MODEL NO.: US-ADA-1821-A- QTY: _____

JOB NAME: SHA PRINCE FREDERICK

TAG/ITEM: _____

CUSTOMER: _____

SIGNATURE: _____

MADE IN U.S.A.

JUST MFG. COMPANY CONTINUES TO MAKE QUALITY AND FUNCTIONALITY A MARK OF THE JUST PRODUCT LINE. TO DO SO REQUIRES THAT WE RESERVE THE RIGHT TO CHANGE PRODUCT INFORMATION WITHOUT NOTICE. DIMENSIONS MAY VARY AND ARE SUBJECT TO CHANGE WITHOUT NOTICE. NO RESPONSIBILITY IS ASSUMED FOR USE OF SUPERCEDED OR VOIDED DATA. FOR THE MOST CURRENT AND ACCURATE INFORMATION REGARDING THE COMPLETE LINE OF JUST SINKS, FAUCETS AND DRAINS, CLICK ON THE ***SPEC LINE DRAWINGS*** LINK ON OUR WEB SITE AT ***www.justmfg.com***

JUST MANUFACTURING COMPANY
9233 KING STREET . FRANKLIN PARK . ILLINOIS . 60131-2111
PH: 847-678-5150 . FAX: 847-678-6817 . E-MAIL: custserv@justmfg.com . www.justmfg.com

©2007-2013-JUST MFG-revised-11/2013

USADA1821A

MECHANICAL FAUCETS

201-ACP

Manual Faucets

CHICAGO FAUCETS
a Geberit company

Product Type

Deck Mounted 8" Fixed Centers Concealed Hot and Cold Water Sink Faucet

Features & Specifications

- 8" Fixed Centers
- 9-1/2" L Type Swing Spout
- 2.2 GPM (8.3 L/min) Aerator
- 2-3/8" Vandal Proof Lever Handle
- Quaturn Compression Operating Cartridge
- 1/2" NPSM Supply Inlets and Coupling Nut for 3/8" or 1/2" Flexible Riser

Performance Specification

- Rated Operating Pressure: 20-125 PSI
- Rated Operating Temperature: 40-140°F

Warranty

- Lifetime Limited Faucet Warranty
- 5-Year Limited Cartridge Warranty
- 1-Year Limited Finish Warranty

Codes & Standards

- ASME A112.18.1/CSA B125.1
- Certified to NSF/ANSI 61, Section 9 by CSA
- ADA ANSI/ICC A117.1

Job Name _____

Item Number _____

Section/Tag _____

Model Specified _____

Architect _____

Engineer _____

Contractor _____

[ ] Submitted as Shown [ ] Submitted with Variations

Date _____

2100 South Clearwater Drive
Des Plaines, IL
P: 847/803-5000
F: 847/803-5454
Technical: 800/TEC-TRUE
www.chicagofaucets.com

201-ACP

Manual Faucets

CHICAGO FAUCETS
a Geberit company

Architect/Engineer Specification

Chicago Faucets No. 201-ACP, Sink Faucet for hot and cold water, concealed deck-mount with 8" fixed centers, chrome plated. L-Type swing spout, 9-1/2" center-to-center. 2.2 GPM (8.3 L/min) pressure compensating Softflo aerator. 2-3/8" metal, vandal-proof, lever handles with sixteen-point, tapered broach and secured blue and red index buttons. Quaturn™ rebuildable compression cartridge, opens and closes 90°, closes with water pressure, features square, tapered stem. 1/2" NPSM supply inlets and coupling nut for 3/8" or 1/2" flexible riser. This product meets ADA ANSI/ICC A117.1 requirements and is tested and certified to industry standards: ASME A112.18.1/CSA B125.1, and Certified to NSF/ANSI 61, Section 9 by CSA.

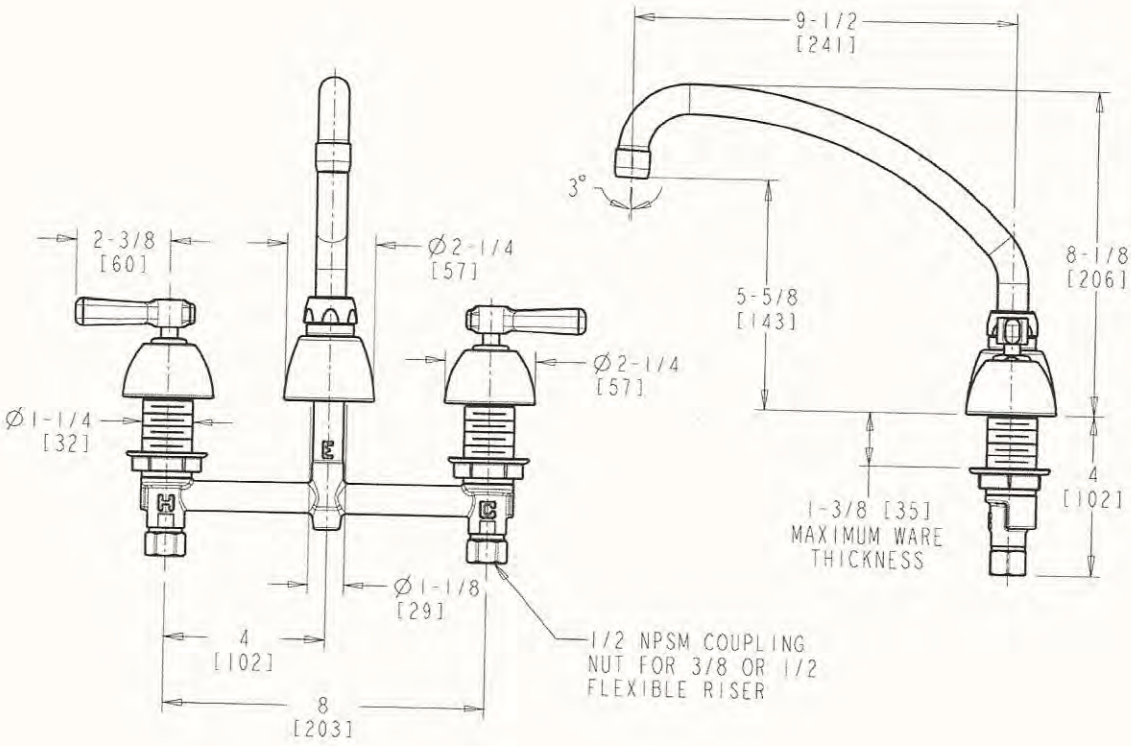

Operation and Maintenance

Installation should be in accordance with local plumbing codes. Flush all pipes thoroughly before installation. After installation, remove spout outlet or flow control and flush faucet thoroughly to clear any debris. Care should be taken when cleaning the product. Do not use abrasive cleaners, chemicals or solvents as they can result in surface damage. Use mild soap and warm water for cleaning and protecting the life of Chicago Faucet products. For specific operation and maintenance refer to the installation instructions and repair parts documents that are located at www.chicagofaucets.com.

Chicago Faucets, member of the Geberit Group, is the leading brand of commercial faucets and fittings in the United States, offering a complete range of products for schools, laboratories, hospitals, office buildings, food service, airports and sport facilities. Call 1.800.TECTRUE or 1.847.803.5000 Option 1 for installation or other technical assistance.

U.S. GREEN BUILDING COUNCIL MEMBER

2100 South Clearwater Drive
Des Plaines, IL
P: 847/803-5000
F: 847/803-5454
Technical: 800/TEC-TRUE
www.chicagofaucets.com

McGuire Manufacturing Co., Inc.
60 Grandview Court
P.O. Box 746 • Cheshire, CT 06410
203-699-1801 • Fax: 203-699-1813
www.mcguiremfg.com

PRODUCT SPECIFICATION

Part No.

Options and Accessories

Job Name:

Submittal Number:

CAST BODY P-TRAP OPTIONS

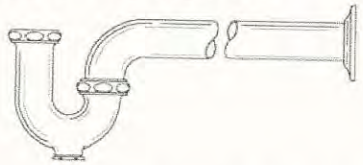

WALL BEND OPTIONS–
Add suffix to part number.
15 – 15" C to E (1-1/4" and 1-1/2" only)
18 – 18" C to E (1-1/4" and 1-1/2" only)
GJ – Ground joint wallbend
Custom sizes available.

FLANGE OPTIONS–
Add suffix to part number.
F – Forged Brass, set screw, chrome plated
DF – Deep Flange, (bell type) chrome plated brass
SDF – Deep Flange, (bell type) chrome plated steel
B – Box Flange, chrome plated wrought steel
BF – Box Flange, chrome plated brass

STANDARD FINISH OPTIONS–
Add suffix to part number.
C – Polished Chrome
SC – Satin Chrome
Custom finishes available.

Options available for McGuire "Classic" Professional Line only.

OPTIONS FOR SUPPLIES

FLANGE OPTIONS– Use suffix after part number.
F – Heavy brass, set screw
DF – Deep flange (bell type) wrought brass
SDF – Deep flange (bell type) steel
B – Deep flange (box type) steel
BF – Deep flange (box type) wrought brass

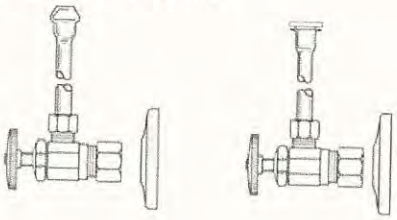

RISER OPTIONS– Use suffix after part number.
R15 – 15" Standard Lavatory or Closet
R20 – 20" Standard Lavatory or Closet
R36 – 36" Standard Lavatory
CR – 12" Compression Riser
CR20 – 20" Compression Riser
SR – 12" Sweat Riser
SR20 – 20" Sweat Riser

COMMON NIPPLE OPTIONS–
Use suffix after part number.
N3 – 3" Cast brass Nipple
N5 – 5" Cast brass Nipple
Custom sizes available.

STUFFING BOX STEM OPTION – Use suffix after part #.
SB – Stuffing Box for Stop Valves. Not available for Convertible™ Ball Valve Supplies.

LOCK SHIELD CAP OPTIONS – Use suffix after part #.
C - Cap for Standard and Heavy Line Loose Key Supply Kits

STOP VALVE HANDLE OPTIONS– Use suffix after part #.
X – Heavy brass Cross Handle

SCREWDRIVER STEP OPTION - Use suffix after part #
SD - Screwdriver Stem for Loose Key Supply Kits

OPTIONS FOR STRAINERS AND DRAINS

8", 10", 12" TAILPIECES IN STOCK–
Use suffix after part number.
8 = 8"
10 = 10"
12 = 12"
Custom size tailpiece and configurations available.
Specialty gauge brass and stainless also available.

STANDARD FINISH OPTIONS –
Add suffix to part number.
C – Polished Chrome
S – Satin Chrome
Custom finishes available.

Options available for McGuire "Classic" Professional Line only.

©2014 McGuire Manufacturing Co., Inc. All rights reserved / www.mcguiremfg.com

McGuire Manufacturing Co., Inc.
60 Grandview Court
P.O. Box 746 • Cheshire, CT 06410
203-699-1801 • Fax: 203-699-1813
www.mcguiremfg.com

PRODUCT SPECIFICATION

Part No.

LF2165, LF2165LK, LF2167, LF2167LK

Lavatory Supply 1/2" I.P.S. x O.D.

Job Name:

Submittal Number:

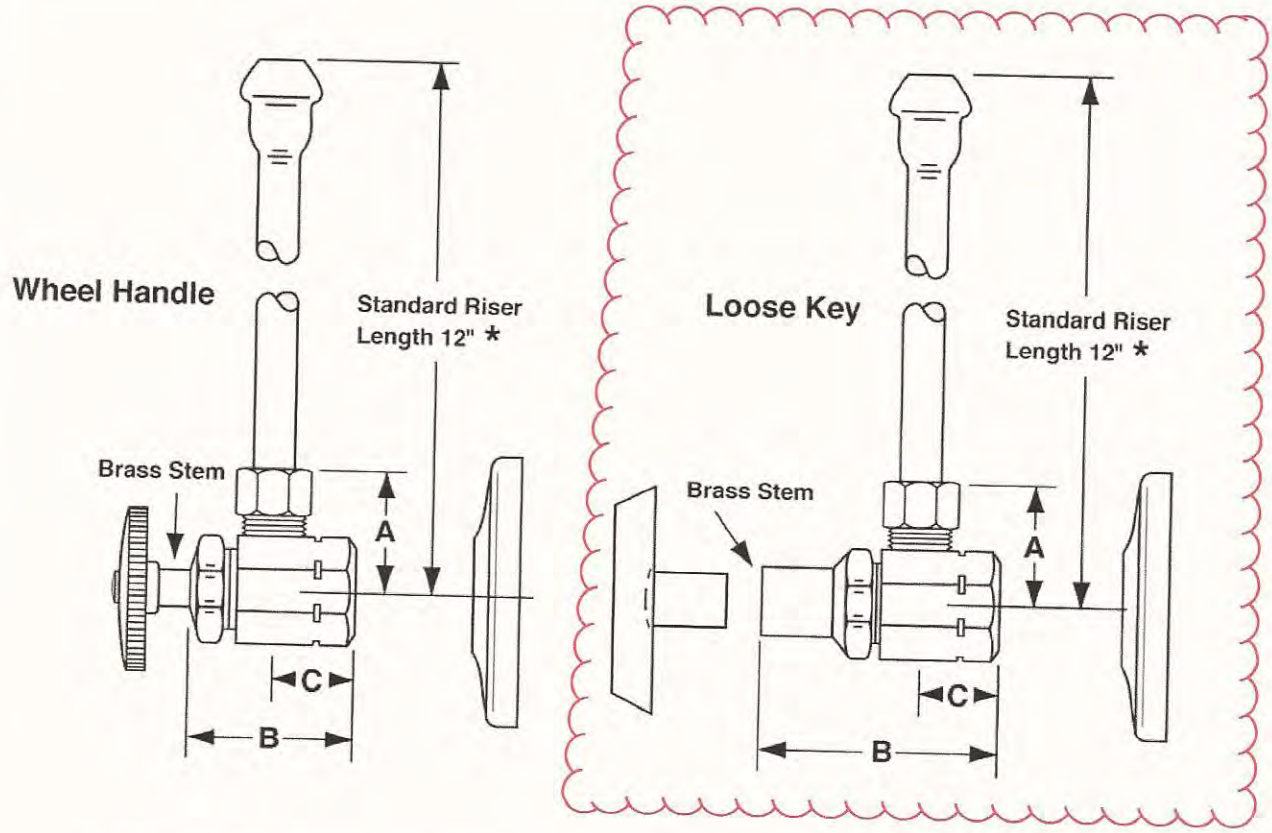

NO.	DESCRIPTION	ROUGHING MEASUREMENTS		
		A	B	C
LF2165	1/2" I.P.S. x 3/8" O.D.	1-3/16"	1-1/2"	3/4"
LF2165LK	1/2" I.P.S. x 3/8" O.D.	1-3/16"	2-1/4"	3/4"
LF2167	1/2" I.P.S. x 1/2" O.D.	1-3/16"	1-1/2"	3/4"
LF2167LK	1/2" I.P.S. x 1/2" O.D.	1-3/16"	2-1/4"	3/4"

LOW-LEAD

LK designates Loose Key

* See options and accessories section for details on product variations.

Specifications:

Supply kit shall include lead free chrome plated brass supply stop valves with full turn brass stem, no plastic, (12, 15, 20) inch chrome plated risers and (shallow, deep, bell) (steel, brass) or (forged brass with set screw) flange. Inlet shall be (3/8, 1/2) inch (IPS, compression). Outlet shall be (3/8, 1/2) inch compression. Supply kit shall be McGuire _____. Supply kit shall be certified by recognized authority and bear manufacturer and testing mark.

© 2014 McGuire Manufacturing Co., Inc. All rights reserved / IV Supply Kits & Stops / www.mcguiremfg.com

R. L. Cranford, Inc.
Plumbing Contractor

6404 Old Solomons Island Road
Tracys Landing, MD 20779
(301)855-7108 fax (301)855-3410
cranfordplumbing@aol.com

ABOVE GROUND DOMESTIC WATER PIPING

TYPE L COPPER

SOLDER JOINT FITTINGS

Mueller Streamline Co.
8285 Tournament Drive, Suite 150
Memphis, TN 38125
P 901.753.3200

STANDARD COPPER TUBE

Mueller Copper Tube products are manufactured in the USA. All tubing produced in Fulton, MS, and Wynne, AR, is seamless and of UNS C12200 grade of copper and is manufactured to meet the chemical, mechanical, cleanness, and eddy current testing requirements of the applicable ASTM specifications set forth below.

Although Mueller Copper Tube strives to meet all requirements specified in ASTM, Standard Tube may not fully meet ASTM dimensional requirements. Standard Tube will be provided unless Certified Tube is clearly defined on the Purchase Order. When specified at order placement, Mueller Copper Tube can supply Certified Tube to meet all requirements of the current applicable ASTM specification, at an additional cost.

- Streamline Copper Water Tube (Types K,L,M) is produced in accordance with, ASTM B88 and ANSI/NSF 61**
- Streamline Copper Refrigeration Service Coils are produced in accordance with ASTM B280
- Streamline Nitrogenized ACR Hard Drawn Copper Tube is produced in accordance with ASTM B280
- Streamline Copper Drainage Tube (DWV) is produced in accordance with ASTM B306
- Oxygen & Medical Service Tube - To ASTM B819 (Types K & L) Hard Drawn Straight Lengths Only in accordance to CGA Cleanness Specification; CGA G4.1 (Compressed Gas Association); & NFPA 99 (Health Care Facilities).

** NSF 61 Restriction Statement Copper Tube (Alloy C12200) is certified by NSF to ANSI/NSF Standard 61 for public water supplies meeting or in the process of meeting the U.S. EPA Lead and Copper Rule (56FR 26460, June 7, 1991). Water supplies with pH less than 6.5 may require corrosion control to limit copper solubility in drinking water."

Last revision: March 11, 2011

Elkhart Products Corporation

PRODUCT CERTIFICATION - SOLDER, BRAZED AND THREADED COPPER AND COPPER ALLOY PLUMBING FITTINGS

Elkhart Products Corporation manufactures and/or supplies products which meet the following specifications:

MSS	SP73	Brazing Joints for Copper and Copper Alloy Pressure Fittings
MSS	SP104	Wrought Copper Solder Joint Pressure Fittings
MSS	SP106	Cast Copper Alloy Flanges and Flanged Fittings; Class 125, 150 and 300
MSS	SP123	Non-Ferrous Threaded and Solder-Joint Unions for use with Copper Water Tube
MSS	SP109	Welded Fabricated Copper Solder Joint Pressure Fittings
ASME/ANSI	B16.29-2001:	Wrought Copper and Wrought Copper Alloy Solder Joint Drainage Fittings – DWV
ASME/ANSI	B16.18-2001:	Cast Copper Alloy Solder Joint Pressure Fittings
ASME/ANSI	B16.15-1994:	Cast Bronze Threaded Fittings
ASME/ANSI	B16.26-1988:	Cast Copper Alloy Fittings for Flared Copper Tube
ASME/ANSI	B16.23-2002:	Cast Copper Alloy Solder Joint Drainage Fittings – DWV
ASME/ANSI	B16.24-2001:	Bronze Pipe Flanges and Flanged Fittings

EPC's wrot copper solder joint fittings also are manufactured to comply with the material, performance, and installation/joining dimensions of ASME/ANSI B16.22. These fittings are also compliant with the European Union's RoHS (Restrictions of Hazardous Substances) Directive, 2002/95/EC.

The materials used to manufacture these fittings are also in compliance with the following specifications:

Tubular Wrought Copper: ASTM B75 Alloy C12200,	Standard specification for Seamless Copper Tube, or
Products Made From Sheet: ASTM B152 Alloy C11000,	Standard Specification for Copper Sheet, Strip, Plate and Rolled Bar
Cast Products: ASTM B584 Alloy C84400,	Standard Specification for Copper Alloy Sand Castings for General Applications; Federal Specification WW-U-516 For Type III, Class A and B Copper Alloy Unions

ELKHART PRODUCTS COPRORATION
Plumbing Division

Dana Buccicone
Director of Technology

State of Massachusetts product approval
Number P1-0698-46, granted 6/3/98.

Subscribed and sworn to before me

On this 24th day of July 2006

Vicki A. Vergon
NOTARY PUBLIC

VICKI A VERGON
NOTARY PUBLIC STATE OF INDIANA
ST. JOSEPH COUNTY
MY COMMISSION EXP. FEB. 28 2007

1255 Oak Street • PO Box 1698 • Elkhart, Indiana 46515 • Tel 574/264-3181 • Fax 574/264-4835
www.ElkhartProducts.com

an Aalberts Industries company

STERLING® Lead-Free Solder

Certificate of Conformance

This is to certify that WORTHINGTON STERLING Lead-Free Solder is lead-free as well as antimony-free. Meets or exceeds the requirements for lead-free plumbing solder set forth in the Federal Safe Drinking Water Act Amendments of June 19, 1986. ANSI/NSF 61 certified. This solder is manufactured per composition ASTM B-32 Alloy Grade TC.

NOMINAL COMPOSITION & TYPICAL PROPERTIES

Tin (Sn)	Balance	Tensile Strength	7130 psi
Copper (Cu)	4% - 5%	Shear Strength	5970 psi
Selenium (Se)	.04% - .20%	Melting Temperature	410°F

Made in U.S.A.
with global components

PremiumLF CofC
Rev 002
Date: 8/13/2015

R. L. Cranford, Inc.
Plumbing Contractor

6404 Old Solomons Island Road
Tracys Landing, MD 20779
(301)855-7108 fax (301)855-3410
cranfordplumbing@aol.com

BALL VALVES

NIBCO S-585-70

Bronze Ball Valves

Two-Piece Body • Full Port • Bronze Trim • Blowout-Proof Stem

Dezincification Resistant

600 PSI/41.4 Bar Non-Shock Cold Working Pressure
150 PSI/10.3 Bar Saturated Steam◆

T-585-70
Threaded

S-585-70
Solder

CONFORMS TO MSS SP-110

MATERIAL LIST

	PART	SPECIFICATION
1.	Handle Nut	Zinc Plated Steel
2.	Handle	Zinc Plated Steel Clear Chromate Plastisol Coated
3.	Threaded Pack Gland	Brass ASTM B 16 Alloy C36000
4.	Packing	PTFE
5.	Stem	Silicon Bronze ASTM B 371 Alloy C69300 or ASTM B 99 Alloy C65100
6.	Thrust Washer	Reinforced PTFE
7.	Ball	Brass ASTM B 124 Alloy C37700 or ASTM B16 Alloy C36000 EACH with Hard Chrome Plate
8.	Seat Ring (2)	Reinforced PTFE
9.	Body	Cast Red Bronze ASTM B 584 Alloy C84400
10.	Body End Piece	Cast Red Bronze ASTM B 584 Alloy C84400

¼" size only has a 304 stainless steel grounding washer.

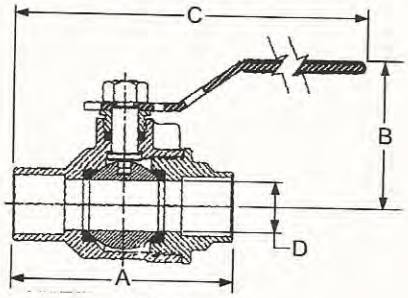

S-585-70
C x C

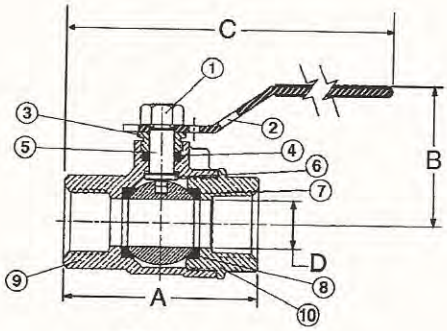

T-585-70
NPT x NPT

DIMENSIONS—WEIGHTS—QUANTITIES

Size In.	Size mm.	Dimensions T-585-70 A In.	T-585-70 A mm.	S-585-70 A In.	S-585-70 A mm.	B In.	B mm.	T-585-70 C In.	T-585-70 C mm.	S-585-70 C In.	S-585-70 C mm.	D In.	D mm.	T-585-70 Lbs.	T-585-70 Kg.	S-585-70 Lbs.	S-585-70 Kg.	Master Ctn. Qty.
¼	8	2.00	51	1.75	44	1.75	44	5.00	127	4.75	121	.38	10	.45	.21	.42	.19	100
⅜	10	2.00	51	1.84	47	1.75	44	5.00	127	4.81	122	.38	10	.45	.21	.42	.19	100
½	15	2.44	62	2.56	65	1.88	48	5.19	132	5.25	133	.50	13	.64	.29	.60	.27	100
¾	20	2.94	75	3.25	82	2.25	57	6.25	159	6.25	159	.75	19	1.33	.60	1.27	.58	50
1	25	3.34	85	3.75	95	2.38	60	6.44	164	6.63	168	1.00	25	1.79	.81	1.72	.78	40
1 ¼	32	4.19	106	5.06	128	3.00	76	6.75	171	7.19	183	1.25	32	3.12	1.41	3.18	1.44	20
1 ½	40	4.72	120	5.99	151	3.16	80	9.06	230	9.69	246	1.50	38	4.78	2.17	5.12	2.32	10
2	50	5.16	131	6.72	170	3.50	89	9.25	235	10.06	256	2.00	51	6.68	3.03	7.10	3.22	8

Note: Solder end is designed to be soft-soldered into lines using solders with the melting point not exceeding 500°F. Higher temperature solders will damage the seat material. See installation sheet packaged with valves.

◆ For detailed Operating Pressure, refer to Pressure Temperature Chart on page 41.

R. L. Cranford, Inc.
Plumbing Contractor

6404 Old Solomons Island Road
Tracys Landing, MD 20779
(301)855-7108 fax (301)855-3410
cranfordplumbing@aol.com

ABOVVE GROUND SOIL AND WASTE PIPING

ABOVE GROUND VENT PIPING

CHARLOTTE NO-HUB PIPE

IDEAL TRIDON HD NO-HUB BANDS

CHARLOTTE
PIPE AND FOUNDRY COMPANY

SUBMITTAL FOR CHARLOTTE PIPE® HUBLESS CAST IRON SOIL PIPE AND FITTINGS

Date: 8/15/2017

Job Name: SHA PRINCE FREDERICK Location: PRINCE FREDERICK

Engineer: Contractor:

Scope:
This specification covers Hubless Cast Iron pipe, fittings, and couplings used in sanitary drain, waste and vent (DWV), sewer, and storm drainage applications. This system is intended for use in non-pressure applications.

Specification:
Hubless Cast Iron pipe and fittings shall be manufactured from gray cast iron and shall conform to ASTM A 888 and CISPI Standard 301. All pipe and fittings shall be marked with the collective trademark of the Cast Iron Soil Pipe Institute® and listed by NSF® International. Hubless Couplings shall conform to CISPI Standard 310, shall be manufactured in the United States, and be certified by NSF® International. Heavy Duty and Medium Duty couplings shall conform to ASTM C 1540, shall be manufactured in the United States, and shall be used if indicated.

Installation:
Installation shall comply with the latest installation instructions published by Charlotte Pipe and Foundry Company® and shall conform to all applicable plumbing, fire, and building code requirements. The system shall be hydrostatically tested after installation to 10 ft. of head (4.3 psi maximum). **WARNING!** Never test with or transport/store compressed air or gas in Cast Iron pipe or fittings. Doing so can result in explosive failures and cause severe injury or death.

Referenced Standards:

ASTM C 564:	Rubber Gaskets for Cast Iron Soil Pipe and Fittings
CISPI 301:	Hubless Cast Iron Soil Pipe and Fittings
CISPI 310:	Hubless Couplings for Cast Iron Soil Pipe and Fittings
ASTM C 1277:	Hubless Couplings
ASTM C 1540:	Hubless Medium Duty and Heavy Duty Couplings

MADE IN USA

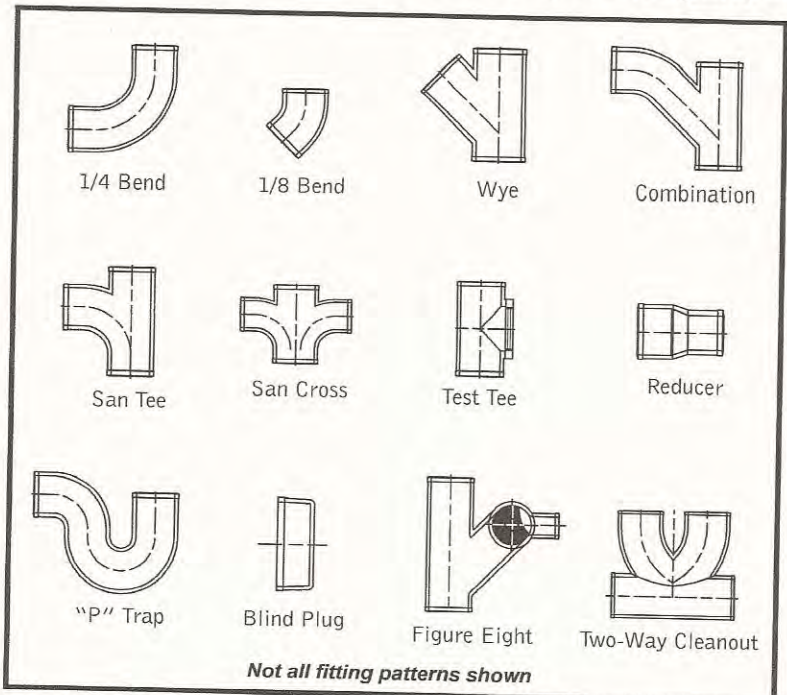

Not all fitting patterns shown

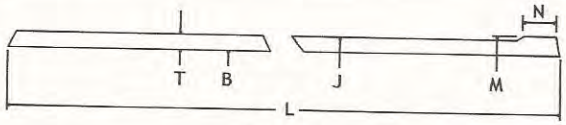

TABLE 1
DIMENSIONS AND TOLERANCES (IN INCHES) OF SPIGOTS AND BARRELS FOR NO-HUB PIPE AND FITTINGS

Size	Inside Barrel Diameter B	Outside Diameter Barrel J	Outside Diameter Spigot M	Width Spigot Bead N (±.13)	Thickness of Barrel T-Nom.	Thickness of Barrel T-Min.	Gasket Positioning Lug W
1½	1.50 ± .09	1.90 ± .06	1.96 ± .06	.25	.16	.13	1.13
2	1.96 ± .09	2.35 ± .09	2.41 ± .09	.25	.16	.13	1.13
3	2.96 ± .09	3.35 ± .09	3.41 ± .09	.25	.16	.13	1.13
4	3.94 ± .09	4.38 + .09 − .05	4.44 ± .09	.31	.19	.15	1.13
5	4.94 ± .09	5.30 + .09 − .05	5.36 ± .09	.31	.19	.15	1.50
6	5.94 ± .09	6.30 + .09 − .05	6.36 ± .09	.31	.19	.15	1.50
8	7.94 ± .13	8.38 ± .09	8.44 ± .09	.31	.23	.17	2.00
10	10.00 ± .13	10.56 ± .09	10.62 ± .09	.31	.28	.22	2.00
12	11.94 ± .09	12.50 ± .13	12.62 ± .13	.31	.28	.22	2.75
15	15.11 ± .09	15.83 ± .13	16.12 ± .13	.31	.36	.30	2.75

Note: *Charlotte Pipe does not recommend or warrant installations joined with unshielded hubless couplings.*

Charlotte Pipe and Foundry Company • P.O. Box 35430 Charlotte, NC 28235 • (800) 438-6091 • www.charlottepipe.com

Charlotte Pipe and Charlotte Pipe and Foundry Company are registered trademarks of Charlotte Pipe and Foundry Company.

FO-SUB-CI-NH (7-20-16)

SUBMITTAL
HEAVY-DUTY "HD"
NO-HUB COUPLINGS

Date

Architect | **Project**

Contractor | **Engineer**

The patented IDEAL-TRIDON Heavy-Duty "HD" No-Hub Couplings are engineered to connect no-hub cast iron pipe in applications replacing the less-efficient hub & spigot material. The Coupling consists of an elastomeric compound gasket (ASTM C-564) housed inside a 304 stainless steel corrugated shield. Depending on the size of the shield, (4) or (6) 304 stainless steel clamps surround the shield and provide the sealing force. The 3/8" hex-head screws are made from 305 stainless-steel. The IDEAL-TRIDON Heavy-Duty "HD" No-Hub Couplings are available in sizes ranging from 1 1/2" – 10". The couplings are designed to be torqued to 80 in-lbs. The entire coupling is corrosion resistant. Conforms to ASTM C1540.

Heavy-Duty "HD" No - Hub Couplings

Size	Part No.	Installation Torque Inch Pounds	No. of Clamps Per Coupling
1 1/2"	6217H8G	80	4
2"	6218H8G	80	4
3"	6219H8G	80	4
4"	6220H8G	80	4
5"	6221H8G	80	6
6"	6222H8G	80	6
8"	6223H8G	80	6
10"	6230H8G	80	6

The Design

The IDEAL-TRIDON Heavy-Duty "HD" No-Hub Couplings have been re-engineered to install with 80 in-lbs. of screw torque and boasts an ultimate torque rating exceeding 100 in/lbs. Our patented, extra wide bi-directional shield is now constructed with a heavier gauge stainless steel. The mechanically interlocked 9/16" wide clamps have also been augmented with a heavier gauge stainless steel and a 3/8" hex-head screw. These changes, teamed with our specially beaded gasket, enable our new Heavy-Duty "HD" coupling to exert exceptional hold on the pipe for a positive, reliable seal. Conforms to ASTM C1540.

The Gasket

Made from high-quality elastomeric compound (ASTM C-564), the IDEAL-TRIDON No-Hub gasket features a pattern of multiple thick sealing sectors and adjacent groove sectors laterally spaced. When the clamps are tightened, this pattern permits the clamping bands and the shield to form a restriction impeding the movement of the shield relative to the gasket.

The Shield

0.008" thick type 304 stainless steel green shield requires less band load to transfer pressure to the gasket, leaving more clamping load in reserve to compress the gasket. The patented, bi-directional corrugations create clamp sealing pressure in both parallel and transverse patterns on the gasket and pipe, thereby avoiding pull-out failures, and providing a positive, reliable seal.

The Clamps

Heavy-duty 304 stainless steel clamps and 3/8" hex-head 305 screws provide the sealing force. 1-½" through 4" couplings use four (4) clamps; 5" through 10" couplings use six (6) clamps. The entire assembly is corrosion resistant.

03/05/12 BB

HEAVY-DUTY "HD" NO-HUB COUPLINGS
Product Information Submittal
for No-Hub Systems

TEST	GASKET PHYSICAL TEST MIN. OR MAX. REQUIREMENTS	ASTM METHOD
Tensile Strength	1500 psi min.	D 412
Elongation	250 min.	D 412
Durometer (Shore A)	70 +/-5 @ 76°F +/- 5°F	D 2240
Accelerated Aging	15% maximum tensile and 20% maximum elongation, 10 points maximum increase in hardness, all determinations after oven aging for 96 hours at 158°F	D 573
Compression Set	25% max. after 22 hours at 158°F	D 395 Method B
Oil Immersion	80% max. volume change after immersion in IRM 903 for 70 hours at 212°F.	D 471
Ozone Cracking	No visible cracking at 2 times magnification of the gasket after 100 hours exposure in 1.5 ppm ozone concentration at 104°F. Testing and inspection to be on gasket which is loop mounted to give approximately 20% elongation of outer surface.	D 1149
Tear Resistance	150 lbf /in. min.	D 624
Water Absorption	20% max. by weight after 7 days at 158°F	D 471

MATERIALS	
Clamp:	Type 304 AISI stainless steel
Screw:	Type 305 AISI stainless steel 3/8" hex head/shoulder
Shield:	Type 304 AISI stainless steel, corrugated. Shield thickness 0.008"
Gasket:	The gasket is made of an elastomeric compound that meets the requirements of ASTM C-564.

The IDEAL-TRIDON patented Heavy-Duty "HD" No-Hub Coupling has been engineered to provide a heavy-duty, all stainless steel coupling; balancing the desire for a more rigid joint with the need to provide a superior, positive seal which can accommodate possible disparities in the mating of No-Hub pipe and fittings. This has been accomplished by manufacturing our Ideal patented No-Hub Heavy-Duty "HD" coupling with a heavy-duty corrugated shield of sufficient width to accommodate additional surface-bearing sealing clamps.

The additional sealing clamps, when torqued to 80 in-lbs., deliver additional performance benefits. First, the overall dimensional thickness of the clamp and shield, in conjunction with the additional width of the coupling, result in a more uniformly rigid joint, with the load being supported at both the outer edge of the coupling and the centerline of the joint. Second, the additional sealing clamps yield increased surface-bearing contact between the coupling and the pipe or fittings, thereby inhibiting joint movement at higher internal pressures not commonly associated with DWV systems.

The 1 1/2", 2", 3" and 4" diameter couplings consist of a 3" wide bi-directional, corrugated 304 stainless steel shield in conjunction with four (4) stainless steel clamps mounted in a series, secured in place by means of fixed and "floating" eyelets to allow the clamp "travel" during tightening. The 5", 6" 8" and 10" couplings consist of a 4" corrugated 304 stainless steel shield and six (6) stainless steel clamps.

All IDEAL-TRIDON patented Heavy-Duty "HD" No-Hub Couplings are designed to be installed with a pre-set torque wrench calibrated at 80 in-lbs. to accommodate the 305 stainless steel 3/8" hex-head/shoulder screw.

Country of Origin - USA

03/05/12 BB

R. L. Cranford, Inc.
Plumbing Contractor

6404 Old Solomons Island Road
Tracys Landing, MD 20779
(301)855-7108 fax (301)855-3410
cranfordplumbing@aol.com

PIPE INSULATION

NOMALOK ELASTOMERIC 1" THICK

NOMACO Insulation

NOMALOCK®

Made with up to 100% post industrial recycled product

Home Innovation NGBS GREEN CERTIFIED

Made in USA

DESCRIPTION

NOMALOCK® is a self-sealing, flexible, polyolefin, thermal insulation and is black in color. It is available in wall thicknesses of 3/8", 1/2", 3/4" and 1", in sizes ranging from 3/8" CTS to 4" IPS. NOMALOCK® is manufactured using NRG5 technology, which for the first time, enables consistent high quality processing of up to 100% recycled post-industrial and post-consumer use polyolefin material. The creation of the ***NRG5 technology*** platform incorporates sustainability principals of **recycling** and **reuse** of materials, **reduction** of virgin raw materials and total material content, **re-engineering** of complex formulations and **re-design** of processes and products to minimize environmental impact.

APPLICATIONS

NOMALOCK® is used to retard heat gain and prevent condensation or frost formation on cold water plumbing, chilled-water and air conditioning lines. NOMALOCK® also retards heat loss on hot water plumbing.

NOMALOCK® has a low thermal conductivity and very low water vapor transmission rate. This low density product demonstrates excellent thermal, physical and chemical resistant properties and has a broad service temperature range between -330°F and 210°F (-201°C and 99°C). It can be installed in commercial, industrial and residential insulation projects. Acceptable for use with heat tracing/heat tape.

INSTALLATION

NOMALOCK® is pre-slit with factory applied pressure sensitive adhesive (PSA) to both seam surfaces and has convenient built-in release tabs for easy installation: slip on the tube, pull the tab, and pinch it shut. It can be easily pushed around P-traps and fittings, though mitering is recommended for optimum performance. All butt joints should be sealed with 320 or 620 (black) Contact Adhesive or other approved sealing system. It is easily cut with a sharp knife. NOMALOCK® is available in a wide range of I.D.s and is sized to fit over copper couplings and fittings. It should be installed on pipes that have been pre-tested for leaks, are not presently hot, and have application temperatures that will not exceed 210°F (99°C).

OUTDOOR APPLICATIONS

NOMALOCK® pipe insulation is made from UV resistant polyolefin resins. For severe UV exposure (rooftop applications) or where optimum performance is required, the product must be protected from the elements. Various jacketing or cladding materials are recommended, ie. PVC, CPVC, AL, etc. If coatings are going to be used, please refer to technical bulletin for recommended coatings.

UNDERGROUND

For buried lines above the water table, use a clean fill such as sand (3" - 5" layer) to protect NOMALOCK® before backfilling. It is recommended to use a minimum 1" wall thickness and the materials to be buried are properly sealed at all seams and butt joints with an approved contact adhesive. For optimum performance, the lines should be encased in a conduit to protect them from problems associated with ground water. *Note: All Nomaco Insulation products must always be installed above the water table.*

RESISTANCE TO MOISTURE VAPOR FLOW

The closed-cell structure and unique formulation of NOMALOCK® effectively retards the flow of moisture vapor, and is considered a low transmittance vapor retarder. For most indoor applications, NOMALOCK® needs no additional protection. Additional vapor barrier protection may be necessary for NOMALOCK® when installed on low temperature surfaces that are exposed to continuous high humidity.

FLAME AND SMOKE RATING

NOMALOCK® in wall thicknesses of 1" (25 mm) and below has a flame spread rating of 25 or less and a smoke development rating of 50 or less as tested by ASTM E 84 Method of Testing entitled: "Surface Burning Characteristics of Building Materials." NOMALOCK® is acceptable for use in duct/plenum applications meeting the requirements of NFPA 90A/90B. *Numerical flammability ratings alone may not define the performance of products under actual fire conditions. They are provided only for use in the selection of products to meet limits specified, when compared to a known standard.*

SPECIFICATION COMPLIANCE

- ASTM C 1427, Type 1, Grade 1
- ASTM E 84 1" 25/50
- Specification Compliance ASTM C 1427, NFPA 90 A/B.
- Dade Co., Fl., Product Control Approved, Acceptance 95-1215.08
- New York City OTCR #13-09 USDA Requirements
- Sound transmission co-efficient = 11 at 1" per ASTM E90
- City of Los Angeles, Gen. Approval, Research Report RR 8316
- Greenguard Gold Certified (formerly children & schools)
- Approved as being eligible to contribute points toward a building under the National Green Building Standard

FEATURES

- CFC/HCFC Free
- Non-porous
- Low VOCs
- Halogen Free
- Fiber Free
- Resistant to mold growth

Manufactured with NRG5 Technology

Manufactured with NRG5 Technology

NOMALOCK®

Physical Properties

		NOMALOCK® Insulation	Test Methods
Thermal Conductivity (K) BTU -in/hr - Ft² - °F (W/mK)	90°F (32°C) Mean Temp	.255 (.037)	ASTM C 177/C 518
	75°F (24°C) Mean Temp	.250 (.036)	ASTM C 177/C 518
	50°F (10°C) Mean Temp	.245 (.035)	ASTM C 177/C 518
Operating Temperature Range	Upper	210°F (99°C)	
Flexible to -100°F (-73°C)	Lower	-330°F (-201°C)	
Water Vapor Permeability Dry Cup. Perm-In		0.0	ASTM E 96
Ozone Resistance		Pass	ASTM D 1171
Chemical/ Solvent Resistance		Good	
Mildew Resistance/Air Erosion		Pass	UL 181

Thickness Recommendations* - To Control Condensation

Pipe Size	Line Temp 50°F		Line Temp 35°F		Line Temp 0°F		Line Temp -20°F	
		10°C		2°C		-18°C		-29°C
Normal Conditions (Max 85°F, 29°C - 70% R.H.)								
3/8" I.D. thru 1-3/8"	3/8"	10 mm	1/2"	13 mm	3/4"	19 mm	1"	25 mm
Over 1-3/8" thru 3-1/8"	3/8"	10 mm	1/2"	13 mm	1"	25 mm	1"	25 mm
Over 3-1/8" thru 4-1/2"*	3/8"	10 mm	1/2"	13 mm	1"	25 mm	1"	25 mm
Over 4-1/2"	1/2"	13 mm	3/4"	19 mm	1"	25 mm	1-1/4"	32 mm
Mild Conditions (Max 80°F, 26°C - 50% R.H.)								
3/8" I.D. thru 2-1/8"	3/8"	10 mm	3/8"	10 mm	1/2"	13 mm	1/2"	13 mm
Over 2-1/8" thru 3-1/8"	3/8"	10 mm	3/8"	10 mm	1/2"	13 mm	1/2"	13 mm
Over 3-1/8" thru 4-1/2"*	3/8"	10 mm	3/8"	10 mm	3/4"	19 mm	3/4"	19 mm
Over 4-1/2"	3/8"	10 mm	1/2"	13 mm	3/4"	19 mm	3/4"	19 mm
Severe Conditions (Max 90°F, 32°C - 80% RH)								
3/8" I.D. thru 1-1/8" I.D.	3/4"	19 mm	3/4"	19 mm	1-1/4"	32 mm	1-1/4"	32 mm
Over 1-1/8" I.D. thru 4-1/2"	3/4"	19 mm	1"	25 mm	1-1/2"	38 mm	1-1/2"	38 mm
Over 4-1/2"	3/4"	19 mm	1"	25 mm	1-1/2"	38 mm	2"	50 mm

NOMALOCK® in thickness noted within the specified temperature ranges will prevent condensation on indoor piping under design conditions defined below.
Thickness recommendations above 1" can be sleeved to achieve thickness desired.
Normal: Maximum severity of indoor conditions seldom exceed 85°F and 70% R.H. in United States.
Mild: Typical conditions are most air-conditioned spaces and arid climates.
Severe: Generally found in areas where excessive moisture is introduced or in poorly ventilated areas where the temperature may be depressed below the ambient.
Under conditions of high humidity, additional thickness of insulation may be required.
*Available: Nom. 1/2" or Nom. 3/4" thickness only.

NOMALOCK® "R" Values

Pipe O.D. or Nominal Insulation I.D.		R Value 3/8" (10 mm) Wall	R Value 1/2" (13 mm) Wall	R Value 3/4" (19 mm) Wall	R Value 1" (25 mm) Wall
3/8"	10 mm	3.1	4.2	6.6	9.3
1/2"	13 mm	2.8	3.7	6.0	8.5
5/8"	16 mm	2.8	3.5	5.6	7.9
3/4"	19 mm	2.6	3.4	5.4	7.6
7/8"	22 mm	2.5	3.3	5.1	7.2
1-1/8"	29 mm	2.4	3.1	4.8	6.8
1-3/8"	35 mm	2.3	3.2	4.9	6.8
1-5/8"	41 mm	2.3	2.9	4.5	6.2
2"	50 mm	2.0	2.6	4.1	5.7
2-1/8"	54 mm	2.3	2.9	4.3	6.0
2-3/8"	62 mm	2.0	2.6	4.0	5.5
2-5/8"	67 mm	2.3	2.8	4.2	5.7
2-7/8"	72 mm	2.0	2.5	3.8	5.3
3-1/8"	79 mm	2.3	2.8	4.1	5.5
3-1/2"	89 mm	2.0	2.5	3.7	5.1
3-5/8"	92 mm	2.8	2.8	4.0	5.5
4-1/8"	105 mm	2.8	2.8	4.0	5.4
4-1/2"	115 mm	1.9	2.4	3.6	4.9

NOMACO Insulation
3006 Anaconda Road • Tarboro, NC 27886 • p 866.876.2684 • f 866.876.2688 • www.nomacoinsulation.com

©November 2013 The GREENGUARD INDOOR AIR QUALITY CERTIFIED® Mark is a registered certification mark used under license through the GREENGUARD Environmental Institute

R. L. Cranford, Inc.
Plumbing Contractor

6404 Old Solomons Island Road
Tracys Landing, MD 20779
(301)855-7108 fax (301)855-3410
cranfordplumbing@aol.com

GAS PIPING

SCHEDULE 40 BLACK STEEL PIPE

VIAGA MEGA PRESS FITTINGS

Wheatland Tube Company
1 Council Avenue P.O. Box 608
Wheatland, PA 16161-0608
800.257.8182
www.wheatland.com

Wheatland ASTM A 53 Schedule 40 and Schedule 80 Pipe

Wheatland Steel Pipe is made by specialists who understand that it's the small details that make the difference between average products and superior products. At the Wheatland Plant, most department heads and foremen have been employed in some phase of pipe manufacturing for 25 or more years.

This kind of specialization, experience and knowledge pays off...in workable, threadable, uniform pipe. Delivered clean. Delivered promptly.

Wheatland specializes in manufacturing welded steel pipe in 1/2 through 4 nominal sizes. Available inventory in 1/8 to 12 pipe sizes produced to various ASTM standards is maintained to meet your pipe requirements.

Care, pride and personal concern are bonus features that go into every inch of Wheatland Pipe. Don't settle for less.

Make sure it's quality. Make sure it's Wheatland.

Standard Pipe Schedule 40 ASTM A 53 Grades A and B

NPS Designator	DN Designator	Outside Diameter		Inside Diameter		Wall Thickness		Nominal Weight (Mass) per unit Length			
		(Inches)	(mm)	(Inches)	(mm)	(Inches)	(mm)	Plain End (lb/ft)	Plain End (kg/m)	Threads & Coupling (lb/ft)	Threads & Coupling (kg/m
1/8	6	0.405	10.3	0.269	6.8	0.068	1.73	0.24	0.37	0.25	0.37
1/4	8	0.540	13.7	0.364	9.2	0.088	2.24	0.43	0.63	0.43	0.63
3/8	10	0.675	17.1	0.493	12.5	0.091	2.31	0.57	0.84	0.57	0.84
1/2	15	0.840	21.3	0.622	15.8	0.109	2.77	0.85	1.27	0.86	1.27
3/4	20	1.050	26.7	0.824	20.9	0.113	2.87	1.13	1.69	1.14	1.69
1	25	1.315	33.4	1.049	26.6	0.133	3.38	1.68	2.50	1.69	2.50
1-1/4	32	1.660	42.2	1.380	35.1	0.140	3.56	2.27	3.39	2.28	3.40
1-1/2	40	1.900	48.3	1.610	40.9	0.145	3.68	2.72	4.05	2.74	4.04
2	50	2.375	60.3	2.067	52.5	0.154	3.91	3.66	5.44	3.68	5.46
2-1/2	65	2.875	73.0	2.469	62.7	0.203	5.16	5.80	8.63	5.85	8.67
3	80	3.500	88.9	3.068	77.9	0.216	5.49	7.58	11.29	7.68	11.35
3-1/2	90	4.000	101.6	3.548	90.1	0.226	5.74	9.12	13.57	9.27	13.71
4	100	4.500	114.3	4.026	102.3	0.237	6.02	10.80	16.07	10.92	16.23
5	125	5.563	141.3	5.047	158.2	0.258	6.55	14.63	21.77	14.90	22.07
6	150	6.625	168.3	6.065	154.1	0.280	7.11	18.99	28.26	19.34	28.58
8	200	8.625	219.1	7.981	202.7	0.322	8.18	28.58	42.55	29.35	43.73
10	250	10.750	273.0	10.020	254.5	0.365	9.27	40.52	60.29	41.49	63.36
Standard Pipe											
12[1]	300	12.750	323.8	12.000	304.8	0.375	9.52	9.61	3.78	51.28	76.21
Note[1] NPS 12 dimensions are for standard wall pipe, not schedule 40.											

Product Type and Specification:
Standard welded pipe is produced in 1/2 to 6 trade sizes. Wheatland pipe is produced to ASTM A 53 Grades A and B, A 501, and A 589 Type II, API 5L and Federal Specification WW-P404. All pipe threads conform to ANSI B1.20.1. Merchant couplings comply with ASTM A 865.

Specifications and descriptions are accurate as known at time of publication and subject to change without notice.

Wheatland ASTM A 53 Grades A & B Schedule 40 Pipe

Submittal Package

viega

Viega MegaPress® and MegaPressG Fitting System

- ☐ Chilled Water
- ☐ Hydronic Heating
- ☐ Fire Protection
- ☐ Low Pressure Steam
- ☐ Heating Fuel Oil
- ☑ Natural Gas
- ☐ Compressed Air

Viega LLC, 100 N. Broadway, 6th Floor • Wichita, KS 67202 • Ph: 800-976-9819 • Fax: 316-425-7618

Submittal Package

System Data Sheet

System Description
Viega MegaPress and MegaPressG are safe, reliable, and economical steel pipe installation systems that use modern cold press connection technology for a wide assortment of more than 200 fittings in dimensions ranging from ½" to 2".

Pipe: Schedule 5 to schedule 40 Black steel pipe from ½" to 2" for Viega MegaPress. Schedule 40 black pipe for Viega MegaPressG.

Viega Smart Connect feature: By means of the Smart Connect feature on Viega MegaPress Systems fittings, an unpressed connection can be recognized by escaping water, or by a drop in pressure, when testing the system. Fitting connections without the Smart Connect feature may not leak initially; however, later they can unseat during system operations. The Smart Connect feature is designed to protect from the potential risk of unpressed fittings.

Applications
All piping must comply with the ASTM A53, A135, A795 and A106 standards. Viega MegaPress and MegaPressG fittings are approved for installations in both above and below ground applications. Per code, local inspector approval must be obtained prior to installation below ground.

Approved Applications:
- Hydronic heat
- Chilled water
- Compressed Air
- Non Medical Gases
- Fire Sprinkler
- Low Pressure Steam
- Vacuum
- Natural Gas
- LP Gas
- Fuel Oil

System Benefits
- Fast and Easy to Use
- Flameless
- Permanent Connections
- Wide Capacity from ½" to 2"
- Large Selection of Fittings
- Consistent Professional Appearance
- Less Equipment Required
- Environmentally Friendly Connection System
- Versatility of Fittings and Tools for Variety of Applications

Fittings
Viega MegaPress and MegaPressG fittings are offered in 200+ configurations including: Elbows, Couplings, Reducers, Tees, Reducing Tees, Threaded Adapters and Unions.

Tools
RIDGID offers pressing tools for connecting MegaPress fittings.
- 330-C Corded Tool (½" to 2")
- 330-B Battery powered Tool (½" to 2")
- 320-E
- RP 340
- CT-400
- ½" to 4" fittings are pressed in 4-7 sec.

RIDGID Pressing Tools		
Model	330C	330B
Volts	120v	14.4v Battery
Amps	5.2A	27.2A
Weight (w/out jaw)	9 lbs.	10 lbs.

History
Press technology has been used in Europe since the late 1980s and in the U.S. since the late 1990s for a variety of applications. Backed by two plumbing leaders with over 175 years of combined excellence.

Operating Temperatures:
Viega MegaPress: 0°F - 250°F
Viega MegaPressG: -40°F - 180°F

Operating Pressures:
Viega MegaPress: 200 psi max
Viega MegaPressG: 125 psi max

Approvals and Certificates

Viega MegaPress
- UL 213
- FM Class 1920
- IAPMO PS117
- ICC LC1002
- CRN #OA14541.6
- ABS
- GL

Viega MegaPressG
- CSA LC-4
- IAPMO LC-4
- ICC LC-4
- CRN #OA14541.6
- ABS
- GL

Compliant with
- ICC International Plumbing Code
- ICC International Mechanical Code
- UPC Uniform Plumbing Code
- UMC Uniform Mechanical Code
- International Fuel Gas Code
- NFPA 13,13D, 13R, 31, 54 and 58
- ASME B31

Contact your local Viega representative for details on local approvals

For more information on RIDGID products contact:
Ridge Tool Company
400 Clark Street, Elyria, Ohio 44036
Demos, Literature: 800-769-7743
Technical inquiries: 800-519-3456
Availability: 888-743-4333
Web: www.ridgid.com

Submittal Package

viega

Product Instructions

Read and understand all instructions for installing Viega MegaPress and MegaPressG fittings. Failure to follow all instructions may result in extensive property damage, serious injury, or death.

Note: Tubing shall be free of surface imperfections.

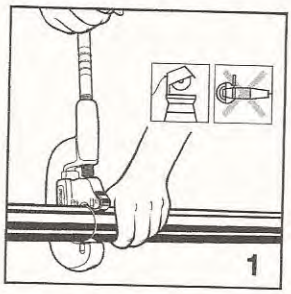

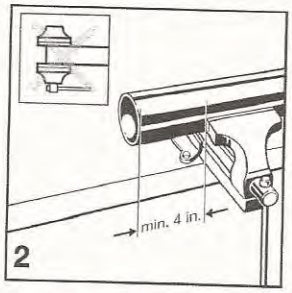

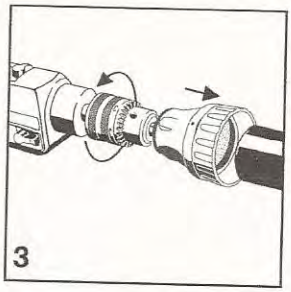

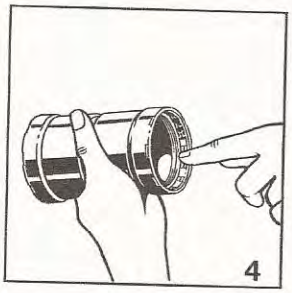

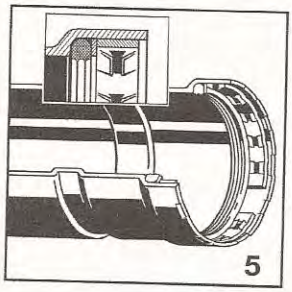

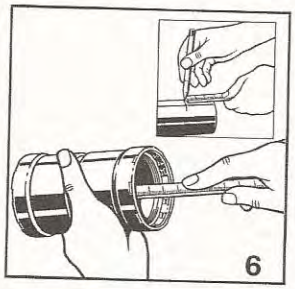

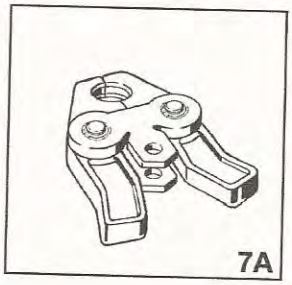

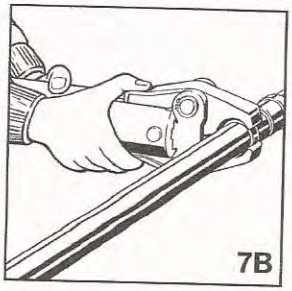

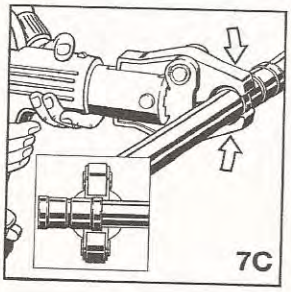

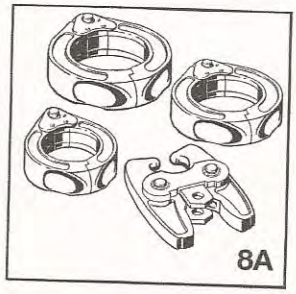

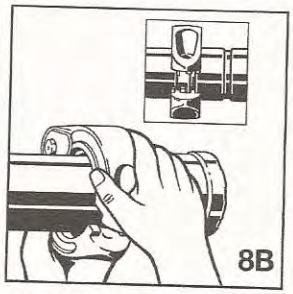

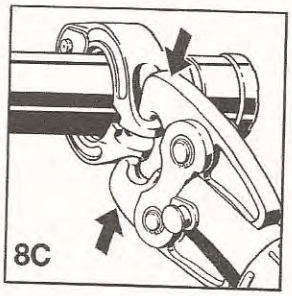

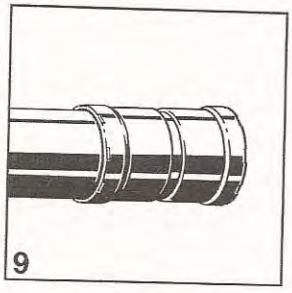

Viega LLC, 100 N. Broadway, 6th Floor • Wichita, KS 67202 • Ph: 800-976-9819 • Fax: 316-425-7618

Submittal Package

viega

Megapress Viega Limited Warranty

Subject to the conditions and limitations in this Limited Warranty, Viega LLC (Viega) warrants to end users, installers, and distribution houses that its Viega MEGAPRESS metal press fittings (Viega Product) with application appropriate sealing element when properly installed shall be free from failure caused by manufacturing defects for a period of ten (10) years from date of installation in Viega MEGAPRESS Approved Applications for fluids/water, oil and lubricant, and gases under Viega specified system operating conditions.

Under this Limited Warranty, you only have a right to a remedy if the failure or leak resulted from a manufacturing defect in the Viega Product and the failure or leak occurs during the warranty period. You do not have a remedy under this warranty and the warranty remedy does not apply if the failure or any resulting damage is caused by (1) components other than those manufactured or sold by Viega, such as black iron pipe; (2) not designing, installing, inspecting, testing, or maintaining the Viega Product in accordance with Viega's installation and product instructions in effect at the time of installation and other specifications and approvals applicable to the installation; (3) use of Viega Product under non recommended system operating conditions, improper handling and protection of the Viega Product prior to, during and after installation, inadequate freeze protection, or exposure to environmental conditions not recommended for the application; or (4) acts of nature, such as, but not limited to, earthquakes, fire, or weather damage. In the event of a leak or other failure of the Viega Product covered by this warranty, it is the responsibility of the end user to take appropriate measures to mitigate any damage, to include making timely repairs. Only if the warranty applies will Viega be responsible for the remedy under this warranty. The part or parts which you claim failed should be kept and Viega contacted by writing to the address below or telephoning 1-877-843-4362 within thirty (30) calendar days after the leak or other failure and identifying yourself as having a warranty claim. You should be prepared to ship, at your expense, the product which you claim failed due to a manufacturing defect, document the date of installation, and the amount of the repair or replacement if performed by you. Within a reasonable time after receiving the product, Viega will investigate the reasons for the failure, which includes the right to inspect the product at a Viega location and reasonable access to the site of damage. Viega will notify you in writing as to the results of its review.

In the event that Viega determines that the failure or leak was the result of a manufacturing defect in the Viega Product covered by this warranty and this warranty applies, the EXCLUSIVE AND ONLY REMEDY under this warranty shall be the reimbursement for reasonable charges for repair or replacement of the Viega Product itself. VIEGA SHALL NOT BE LIABLE FOR ANY CONSEQUENTIAL OR OTHER DAMAGE (FOR EXAMPLE, ECONOMIC LOSS, WATER OR PROPERTY OR MOLD REMEDIATION) UNDER ANY LEGAL THEORY AND WHETHER ASSERTED BY DIRECT ACTION, FOR CONTRIBUTION OR INDEMNITY OR OTHERWISE.

THE ABOVE WARRANTY IS IN LIEU OF ALL OTHER WARRANTIES, EXPRESS OR IMPLIED, INCLUDING, BUT NOT LIMITED TO, THE IMPLIED WARRANTIES OF MERCHANTABILITY AND FITNESS FOR A PARTICULAR PURPOSE OR ANY STATUTE OF LIMITATIONS RELATING TO SUCH WARRANTIES. Other than this Limited Warranty, Viega does not authorize any person or firm to create for it any other obligation or liability in connection with its products.

This Limited Warranty gives you specific legal rights and you also may have other rights which may vary from state to state. This warranty shall be interpreted and applied under the law of the state in which the product is installed and is intended as a COMMERCIAL WARRANTY.

MEGAPRESS WARRANTY, 9/2011

Viega LLC, 100 N. Broadway, 6th Floor • Wichita, KS 67202 • Ph: 800-976-9819 • Fax: 316-425-7618

Date Received: 7/19/2018
Date Reviewed: 7/24/2018

Reviewed by: Ty Moore/R. Schaar	**Work Order Number:** 90170-079
Submittal Number: 224216.16-01R1	**Contract Number:** CA1435129
Specification Number: 224216.16	**Project:** Prince Frederick Fire & Life Safety Phase 2
Specification Name: Plumbing - Sink Only	**Doc Id:** 24470

The following has been reviewed for general arrangement. Any approval is subject to compliance with all contract requirements. Detailed dimensions and quantities have not been checked.

Comments and Actions

ITEM	DESCRIPTION/COMMENT	ACTION
Commercial Sink	Submitted sink does not fit in counter as modified in ASI 3. Provide Just Manufacturer Ledge Type – Double Bowl model DL-ADA-1829-A-GR, 18”x29” instead of submitted model Elkay Model ELUHAD311850 sink	AN

Action Codes:

A– Approved	**AN** – Approved as noted
ANR – Approved as noted; return record copy	**RR** – Revise and resubmit
REJ – Rejected	**RA** – Receipt acknowledged

Submittal Transmittal Cover Sheet

7/12/2018

General Contractor; SE Davis Const. Contact: Jeff Holt, PM Address: P.O. Box 1008 La Plata MD, 20646 Phone: O 301-870-2400 email; jeff@sedavisconstruction.com	Owner; SHA Contact; Kimberly Triszczuk Address; District 5 Construction Phone; 410-474-4257 email; ktriszczuk@sha.state.md.us	Project; SHA Maintenance Bldg Address; Rte. 4 South Prince Frederick MD Phone: P.O.C.

GC Submittal #	CA1435129-224216.16-2.1R1
Subcontractor Submittal #	2
Supplier(s):	
Spec. # 224216.16 Dwg. P-101	
Section Title	Plumbing - Commercial Sinks
	Elkay Model(s) ELUHAD311850 sink
	Revised and resubmitted for approval

General Contractors stamp/initials	Architects stamp
Engineers Stamp	

PRODUCT SPECIFICATIONS

Elkay Lustertone™ Stainless Steel 30-3/4" x 18-1/2" x 4-7/8", Equal Double Bowl Undermount ADA Sink. Sink is manufactured from 18 gauge 304 Stainless Steel with a Lustertone finish, Rear Center drain placement, and Bottom only pads.

Installation Type:	Undermount
Material:	304 Stainless Steel
Finish:	Lustertone
Gauge:	18
Sound Deadening:	Bottom only pads
Number of Bowls:	2
Sink Dimensions:	30-3/4" x 18-1/2" x 4-7/8"
Bowl 1 Dimensions:	13-1/2" x 16" x 4-7/8"
Bowl 2 Dimensions:	13-1/2" x 16" x 4-7/8"
Drain Size:	3-1/2" (89mm)
Drain Location:	Rear Center
Minimum Cabinet Size:	36"
Mounting Hardware:	Undermount brackets sold separately
Template Included:	Yes
Cutout Template #:	1000001312

Template is available for download at elkay.com

AMERICAN PRIDE. A LIFETIME TRADITION.
Like your family, the Elkay family has values and traditions that endure. For almost a century, Elkay has been a family-owned and operated company, providing thousands of jobs that support our families and communities.

Product Compliance: ADA & ICC A117.1
ASME A112.19.3/CSA B45.4
BUY AMERICAN ACT

Sinks are listed by IAPMO® as meeting the applicable requirements of the Uniform Plumbing Code®, International Plumbing Code®, and National Plumbing Code of Canada.

Complies with ADA & ICC A117.1 accessibility requirements when installed according to the requirements outlined in these standards.

Clean and Care Manual (PDF)
Installation Instructions (PDF)
Limited Lifetime Warranty (PDF)

Similar models are available with: additional ADA depths, Perfect Drain

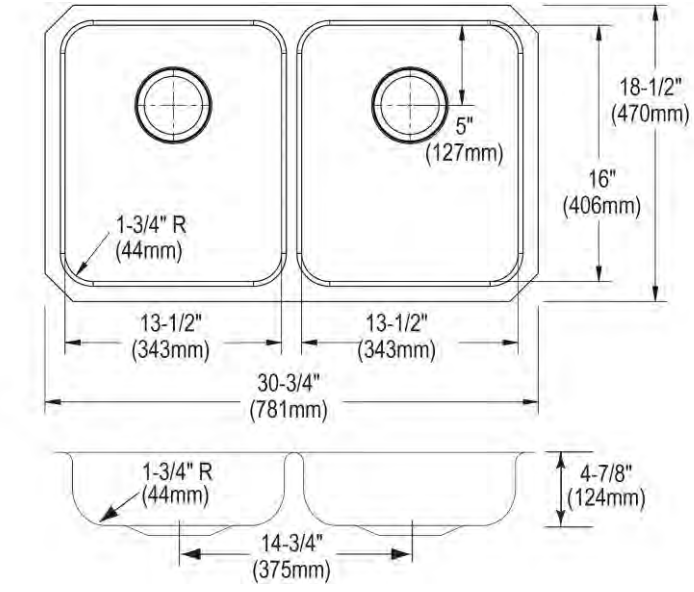

PART:_____QTY: _____
PROJECT:_____
CONTACT:_____
DATE:_____
NOTES:_____
APPROVAL:_____

Installation Profile:

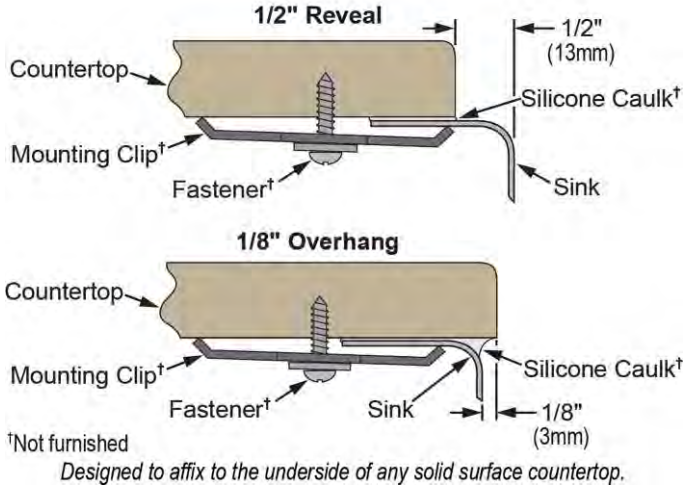

Designed to affix to the underside of any solid surface countertop.

OPTIONAL ACCESSORIES

Bottom Grid:	LKWOBG1316SS
Cutting Board:	CB1613*, CB1713*, CBS1316*
Drain:	LK99, LKAD35
Faucet:	LKGT1041, LKGT2041
Hardware:	LKUCLIP8 (2 Required)
Rinsing Basket:	LKWRB1316SS, LKWERBSS
Sinkmate:	LKSMHSL
Soap Dispenser:	LKGT1054
* 1/2" sink reveal required for proper fit.	

DL-ADA-1829-A-GR

SUBMITTAL DATA

STYLIST GROUP
LEDGE TYPE - DOUBLE BOWL
18 GAUGE

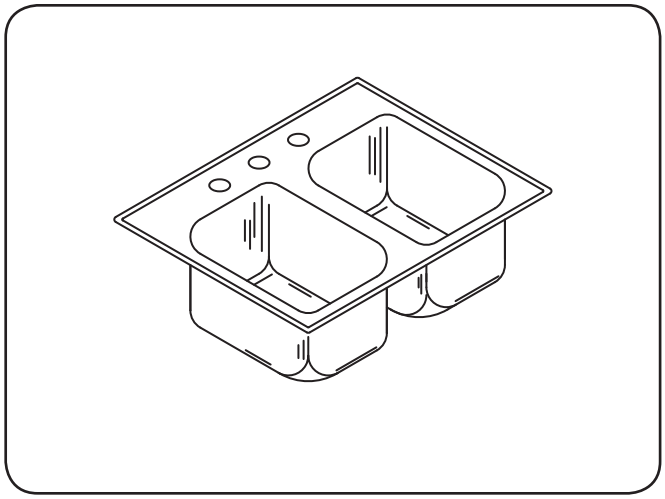

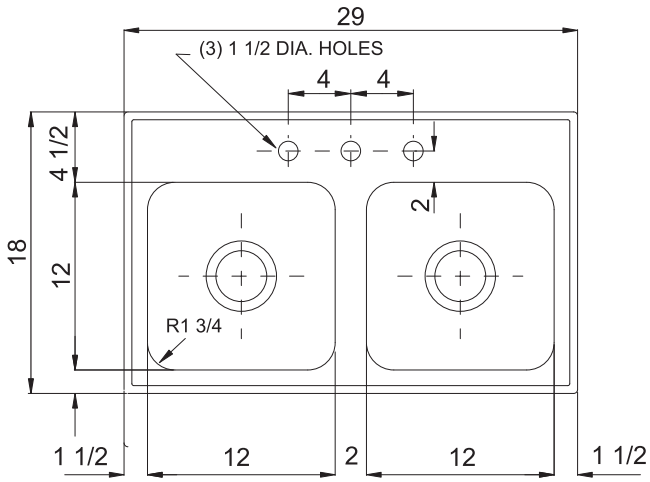

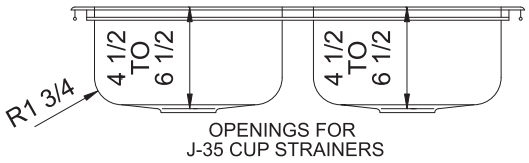

SPECIFICATION

Seamless die-drawn construction of Type 304, 18-8 stainless steel. Interior and top surfaces polished to a non-porous Hand-Blended Just Finish with highlighted bowl rim. Fully coated underside insulated for sound and reduces condensation. Straight-sided compartment with adius corners provides greater capacity.Self-rimming top mount Grip-Rim Plus with stainless steel mounting channels. Conforms to ASME/ANSI A112.19.3M. Certified conformance with ASME A112.19.3/CSA B45.4, Canadian Standards (CSA), Uniform Plumbing Code (UPC) and Inter national Plumbing Code (IPC) and Americans with Disabilities Act(ADA).Drain punch 3-1/2” centered for Just J-35 drain.

CUTOUT DIMENSIONS		
Model Number	Front-to-Back	Left-to-Right
DL-ADA-1829-A-GR	17-1/4	28-1/4

7.68 Gallon Capacity*

Capacity Matters
Max ID sizing with straight sided bowl configuration (non tapered sides). Tight corner radius design.

**Capacity is based on 6-1/2” Depths*

FAUCET PUNCHING - MUST BE SPECIFIED	
☐ (1) Hole Centered	
☐ (2) Holes on 4" centers	
☐ (3) Holes on 4 "centers(illustrated)	
☐ Alternate Punching: Faucet Model:	Punching Required:

DEPTH - MUST BE SPECIFIED:					
☐ 4 1/2" DEEP	☐ 5" DEEP	☐ 5-1/2" DEEP	☐ 6" DEEP	☐ 6-1/2" DEEP	

DRAIN LOCATION - MUST BE SPECIFIED:				
☐ CENTER	☐ CENTER REAR	☐ LEFT REAR	☐ RIGHT REAR	

APPROVED FOR MANUFACTURING

MODEL NO.: DL-ADA-1829-A-GR QTY: _____

JOB NAME: _____

TAG/ITEM: _____

CUSTOMER: _____

SIGNATURE: _____

MADE IN U.S.A.

JUST MFG. COMPANY CONTINUES TO MAKE QUALITY AND FUNCTIONALITY A MARK OF THE JUST PRODUCT LINE. TO DO SO REQUIRES THAT WE RESERVE THE RIGHT TO CHANGE PRODUCT INFORMATION WITHOUT NOTICE. DIMENSIONS MAY VARY AND ARE SUBJECT TO CHANGE WITHOUT NOTICE. NO RESPONSIBILITY IS ASSUMED FOR USE OF SUPERSEDED OR VOIDED DATA. FOR THE MOST CURRENT AND ACCURATE INFORMATION REGARDING THE COMPLETE LINE OF JUST SINKS, FAUCETS AND DRAINS, CLICK ON THE ***SPEC LINE DRAWINGS*** LINK ON OUR WEB SITE AT ***www.justmfg.com***

JUST MANUFACTURING COMPANY
9233 KING STREET . FRANKLIN PARK . ILLINOIS . 60131-2111
PH: 847-678-5150 . FAX: 847-678-6817 . E-MAIL: custserv@justmfg.com . www.justmfg.com

©2007-JUST MFG-REVISED-1/2009

Date Received: 8/13/2018
Date Reviewed: 8/20/18

Reviewed by: T Morris	**Work Order Number:** 90170-079
Submittal Number: 230713-02	**Contract Number:** CA1435129
Specification Number: 230713	**Project:** Prince Frederick Fire & Life Safety Phase 2
Specification Name: Duct Insulation	**Doc Id:** 24781

The following has been reviewed for general arrangement. Any approval is subject to compliance with all contract requirements. Detailed dimensions and quantities have not been checked.

Comments and Actions

ITEM	DESCRIPTION/COMMENT	ACTION
Duct Insulation	Insulation shall be 1-1/2 inches thick and 1.5lb/cuft.	AN

Action Codes:

A– Approved	**AN** – Approved as noted
ANR – Approved as noted; return record copy	**RR** – Revise and resubmit
REJ – Rejected	**RA** – Receipt acknowledged

Submittal Transmittal Cover Sheet

Gen. Contractor; SE Davis Const.	Arch./Eng. WRA	Project; SHA - Prince Frederick
Contact: Jeff Holt, PM	Contact; Kim Triszczuk	Life Safety Renovations
Address: P.O. Box 1008	Address; 138 State Highway	Address; Rte. 4 south
La Plata MD, 20646	Annaplois MD 21401	Prince Frederick MD
Phone: O 301-870-2400	Phone; 410-474-7257	P.O.C.
email; jeff@sedavisconstruction.com	email; KTriszczuk@sha.state.md.us	Phone

GC Submittal #	CA1435129-230713
Subcontractor Name	All Weather Mechanical
Subcontractor Submittal #	2
Spec. # Dwg.	230713
Section Title	Duct Insulation

General Contractors stamp/initials	Architects stamp
Engineers Stamp	

sustainable insulation®

Specification Sheet

CertainTeed SAINT-GOBAIN

SoftTouch™ Duct Wrap Insulation

Product Name	CertainTeed SoftTouch™ Duct Wrap Insulation
Manufacturer	CertainTeed Corporation
Address	20 Moores Road Malvern, PA 19355
Phone	800-233-8990
Website	www.certainteed.com/insulation

PRODUCT DESCRIPTION

Basic Use: SoftTouch™ Duct Wrap Insulation is used to insulate rectangular and round heating, ventilating and air-conditioning ductwork.

Benefits: SoftTouch Duct Wrap Insulation provides thermal efficiency that reduces unwanted heat loss or gain from equipment and ductwork. When properly installed in the correct thickness, this product virtually eliminates condensation problems on cold duct surfaces.

Composition and Materials: SoftTouch Duct Wrap is a blanket-type insulation composed of tan, uniformly textured, inorganic fibrous glass formed with a formaldehyde-free, plant-based binding agent. It is available unfaced or with FSK, gray PSK or white PSK vapor retarder facing. On faced products, a stapling/taping tab is provided on one edge.

Limitations: The product should be kept clean and dry from the time of manufacture through job site installation and system operation.

SoftTouch Duct Wrap is suitable for use with most heating, ventilating and air-conditioning ductwork operating at temperatures from 35°F to 250°F (1.7°C to 121°C) for faced SoftTouch Duct Wrap and from 35°F to 450°F (1.7°C to 232°C) for unfaced SoftTouch Duct Wrap.

Sizes: See table on back for available sizes. Contact CertainTeed for other sizes and minimum order quantities.

INSTALLATION

Sheet metal ducts must be clean, dry and sealed tightly prior to insulating with CertainTeed SoftTouch Duct Wrap.

To ensure installed thermal performance, SoftTouch Duct Wrap must be cut to "stretch-out" dimensions. This requires measurement of the duct perimeter, then cutting the duct wrap to the dimensions (perimeter + add-on) indicated in the stretch-out table on the other side. A 2" piece of insulation is removed from the facing at the end of the piece of insulation to form an overlapping stapling and taping flap.

SoftTouch Duct Wrap is installed by wrapping the insulation around the perimeter of the duct with the facing out. Adjacent sections of duct wrap are tightly butted with the 2" taping flap overlapping. Seams must be stapled with outward-clinching staples on approximately 6" centers. When a vapor retarder is required, all seams, joints, tears, punctures and/or other penetrations of the duct wrap must be sealed with a pressure sensitive vapor retarder tape that matches the facing, or a suitable mastic system.

Where rectangular ducts are 24" in width or greater, SoftTouch Duct Wrap must be additionally secured to the bottom of the duct with mechanical fasteners spaced 18" on center to prevent sagging.

For additional installation details, consult the National Commercial and Industrial Insulation Standards (current edition) published by the Midwest Insulation Contractors Association (MICA).

AVAILABILITY AND COST

Manufactured in the United States. Available in select Western U.S./Canada regions. For availability and cost, contact your local distributor or call CertainTeed Sales Support Group at 800-233-8990.

WARRANTY

Refer to CertainTeed's Limited Warranty for Fiber Glass Duct Wraps (30-32-113).

TECHNICAL DATA

Applicable Standards

- Model Building Codes:
  – ICC
- Material Standards:
  – ASTM C1290
  Type I, Unfaced
  Type II, PSK – Grey
  Type III, FSK & PSK – White
  – ASTM C553
  Type I, Type 75 Duct Wrap
  Type II, Type 100 & 150 Duct Wrap
  Type III, Type 150 Duct Wrap
  – CAN/CGSB-51.11-92
  – ASTM C1136: FSK & White PSK, Type II, Gray PSK, Type IV
- Fire Safety Standards:
  – NFPA 90A, NFPA 90B

Fire Resistance

- Fire Hazard Classification:
  – UL 723, ASTM E84, CAN/ULC-S102
  Max. Flame Spread Index: 25
  Max. Smoke Developed Index: 50
- Non-Combustible:
  – ASTM E136
  Meets test requirements

Physical/Chemical Properties

- Thermal Performance:
  – See table on other side
- Operating Limits:
  – Temperature: ASTM C411
  Faced: Max. 250°F / 121°C
  Unfaced: Max. 450°F / 232°C
- Water Vapor Sorption:
  – ASTM C1104
  < 5% by weight
- Water Vapor Transmission - Facing:
  – ASTM E96, Desiccant Method
  FSK and white PSK: Max. 0.02 perms
  (1.15 x 10-9 g/Pa•s•m2)
  Gray PSK: Max. 0.09 perms
  (5.17 x 10-9 g/Pa•s•m2)
- Corrosiveness:
  – ASTM C665 / Pass testing
- Fungi Resistance:
  – ASTM C1338 / Pass testing
- Odor Emission:
  – ASTM C1304 / Pass testing

MAINTENANCE

An inspection and preventative maintenance program for the HVAC system is recommended to ensure optimum performance.

TECHNICAL SERVICES

Technical assistance can be obtained either from your local CertainTeed sales representative, or by calling CertainTeed Sales Support Group at 800-233-8990.

CONDENSATION CONTROL

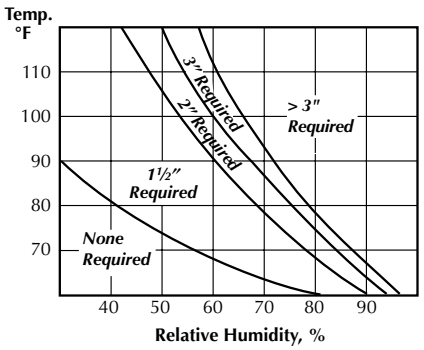

This chart is based on indoor conditions so far as wind and other factors are concerned.

To determine thickness to prevent condensation, based on installed thickness at 75% of nominal (out-of-package) thickness and a duct internal air temperature of 55°F, refer to the condensation control chart.

To use: 1) Select maximum relative humidity (%) on lower axis; 2) Read up vertically until that line intersects the maximum ambient air temperature; 3) Select the thickness indicated at the point of intersection.

THERMAL PERFORMANCE

Product Type	Thickness in.	Thickness mm	R-Value h•ft²•°F / btu	R-Value m²•°C / w	Installed R-Value h•ft²•°F / btu	Installed R-Value m²•°C / w	K-Value btu•in / h•ft²•°F	K-Value w / m²•°C	Installed K-Value btu•in / h•ft²•°F	Installed K-Value w / m²•°C
75 (0.75 pcf*)	1	25	3.8	0.67	3.0	0.53	0.26	0.038	0.25	0.036
	1½	38	5.2	0.92	4.2	0.74	0.29	0.042	0.27	0.039
	2	51	6.9	1.22	5.7	1.00	0.29	0.042	0.26	0.038
	2⅛	54	7.3	1.29	6.0	1.06	0.29	0.042	0.27	0.038
	2½	64	8.6	1.51	7.1	1.25	0.29	0.042	0.26	0.037
	3	76	10.2	1.80	8.3	1.46	0.29	0.42	0.27	0.039
	4	102	13.5	2.38	11.0	1.94	0.30	0.043	0.27	0.039
100 (1.0 pcf*)	1	25	3.8	0.67	3.0	0.53	0.26	0.038	0.25	0.036
	1½	38	5.7	1.00	4.5	0.79	0.26	0.038	0.25	0.036
	2	51	7.6	1.34	6.1	1.07	0.26	0.038	0.25	0.035
150 (1.5 pcf*)	1	25	4.1	0.72	3.2	0.56	0.24	0.035	0.23	0.034
	1½	38	6.2	1.09	4.8	0.85	0.24	0.035	0.23	0.034
	2	51	8.3	1.46	6.4	1.13	0.24	0.035	0.23	0.034

Tested in accordance with ASTM C518 at 75°F (24°C) mean temperature. R means resistance to heat flow. The higher the R-Value, the greater the insulating power. The installed R-Value and K-Value based upon 25% compression of the product thickness during installation. To get the installed R-Value, it is essential that this insulation be installed properly. If you do it yourself, follow the installation instructions carefully.

*pcf. is pounds per square foot

INSTALLATION STRETCH-OUT DIMENSIONS

Product Label Thickness in.	Product Label Thickness mm	Average Installed Thickness in.	Average Installed Thickness mm	Stretch-Out Dimensions[1] perim.	Round Duct in.	Round Duct mm	Square Duct in.	Square Duct mm	Rectangular Duct in.	Rectangular Duct mm
1	25	0.75	19	P+	7.0	178	6.0	152	5.0	127
1.5	38	1.13	29	P+	9.5	241	8	203	7	178
2	51	1.50	38	P+	12	305	10	254	8	203
2.125	54	1.59	40	P+	12.6	321	10.4	270	8.4	213
2.5	64	1.875	48	P+	14.5	368	12.5	318	9.5	241
3	76	2.25	57	P+	17	432	14.5	368	11.5	292
4	106	3.00	76	P+	22.0	559	18.5	470	14.5	368

[1] The stretch-out dimension is equal to the duct perimeter (P) plus the add-on factor for the type of duct being installed.

AVAILABLE SIZES

Product Type	Facing	Thickness in.	Thickness mm	Length in.	Length m	Width in.	Width mm
75 (0.75 pcf)	UNFACED	1	25	150	45.7	9-72	229-1829
		1½	38	150	45.7		
		2	51	75	22.9		
		2½	64	75	22.9		
		3	76	50	15.2		
	FSK/PSK	1½	38	100	30.5	48	1219
		2	51	75	22.9		
		2⅛	54	75	22.9		
		2½	64	75	22.9		
		3	76	50	15.2		
		4	102	50	15.2		
100 (1.0 pcf)	Unfaced	1	25	150	45.7	9-72	229-1829
	FSK/PSK	1	25	100	30.5	48	1219
		1½	38	100	30.5		
		2	38	75	22.9		
150 (1.5 pcf)	FSK/PSK	1½	38	75	22.9	48	1219
		2	51	50	15.2		

SAINT-GOBAIN

CertainTeed Corporation

ROOFING • SIDING • TRIM • DECKING • RAILING • FENCE • GYPSUM • CEILINGS • INSULATION

20 Moores Road Malvern, PA 19355 Professional: 800-233-8990 Consumer: 800-782-8777 certainteed.com

© 11/16 CertainTeed Corporation, Printed in the USA, Code No. 30-35-016

Date Received: 8/9/2018
Date Reviewed: 8/14/18

Reviewed by: T Morris	**Work Order Number:** 90170-079
Submittal Number: 233113-01	**Contract Number:** CA1435129
Specification Number: 233113	**Project:** Prince Frederick Fire & Life Safety Phase 2
Specification Name: Duct Sealant	**Doc Id:** 24755

The following has been reviewed for general arrangement. Any approval is subject to compliance with all contract requirements. Detailed dimensions and quantities have not been checked.

Comments and Actions

ITEM	DESCRIPTION/COMMENT	ACTION
Duct Sealant	No comments	A

Action Codes:

A– Approved	**AN** – Approved as noted
ANR – Approved as noted; return record copy	**RR** – Revise and resubmit
REJ – Rejected	**RA** – Receipt acknowledged

Submittal Transmittal Cover Sheet

Gen. Contractor; SE Davis Const. Contact: Jeff Holt, PM Address: P.O. Box 1008 La Plata MD, 20646 Phone: O 301-870-2400 email; jeff@sedavisconstruction.com	Arch./Eng. WRA Contact; Kim Triszczuk Address; 138 State Highway Annaplois MD 21401 Phone; 410-474-7257 email; KTriszczuk@sha.state.md.us	Project; SHA - Prince Frederick Life Safety Renovations Address; Rte. 4 south Prince Frederick MD P.O.C. Phone

GC Submittal #	CA1435129-233113
Subcontractor Name	All Weather Mechanical
Subcontractor Submittal #	8
Spec. # Dwg.	233113 2.4
Section Title	Duct Sealant

General Contractors stamp/initials	Architects stamp
Engineers Stamp	

HARDCAST
DUCT SEALANTS & INSULATION ADHESIVES

Contributes to LEED® Credit Requirements

CCWI-181

Indoor/Outdoor
Water Based Duct Sealant

PART NUMBERS

304142	1 Case w/ (25) 11 oz. Cartridges (White)
304146	1 Case w/ (25) 11 oz. Cartridges (Gray)
304144	1 Case w/ (4) 1-Gallon Pails (White)
304148	1 Case w/ (4) 1-Gallon Pails (Gray)
304143	1 - 2-Gallon Pail (White)
304147	1 - 2-Gallon Pail (Gray)
304145	1 - 5-Gallon Pail (White)

TECHNICAL DATA

Color	White & Gray
Consistency	Heavy textured
Base	Synthetic latex
Solvent	Water
Weight per Gallon	11.6 lbs.
Solids Content	73.4%
Viscosity	Thixotropic
Coverage (UL 181 A-M)	Apply 18 mil, scrim, addt. 18 mil
Coverage (UL 181 B-M)	Approximately 214 to 320 lin. ft. per gal. at 20 to 30 mil wet f lm thickness at 3" width
Shore A Hardness	> 20
Flexibility	Passes ¼ inch mandrel bend
Time to Test	48 hours*
Service Temperature	-20°F to 200°F
Mildew Resistance	Mold & Mildew resistant
VOC	Exempt: 0 g/l Non Exempt: 38 g/l (less water)
Surface Burning	Flame Spread - 0, Smoke Developed - 0 (When tested in accordance with ASTM E84, UL 723)
Pressure Classes	SMACNA ½ , 1, 2, 3, 4, 6 and 10 inches w.g.
Seal Class	Meets Seal Class A
Packaging	11 oz. cart.; 1, 2 & 5 gal. pails
Freeze/Thaw Stability	Passed 5 Cycles

*May vary according to temperature and humidity

SPECIFICATION/STANDARDS COMPLIANCE

Property	Method	Results
Freeze Thaw & Heat Cycling	ASTM C-731	Pass
Slump Test	ASTM D-2202	Pass
VOC Limitation	SCAQMD Rule 1168	Pass
	USDA	Pass
	FDA	Pass
	EPA	Pass
	City of Los Angeles Approval RR#8427	Pass

A versatile, all purpose duct sealant for use on all types of metal duct, f berglass duct board, duct fabric and f ex duct. CCWI- 181 incorporates a built-in polyester reinforcement for exceptional strength, with UV inhibitors for outdoor use. UL 181A-M listed / UL 181B-M listed.

APPLICATION

Temperature	35°F to 110°F (1.7°C to 44°C)
Method	Brush, putty knife, caulk gun
Preparation	Surface must be dry, dirt, oil, and grease free.
Rate (UL 181 A-M)	Apply 18 mil, scrim and 18 mil over scrim.
Rate (UL 181 B-M)	Approx. 214 to 320 lin. ft. per gal. at 20 to 30 mil wet f lm thickness at 3" width.
Clean Up Wet	Soap and water
Clean Up Dry	UN-TACK™ or Solvent (Use safe handling practices.)
Painting	Only latex or epoxy paints
Ductboard	Scrim required for UL 181A-M

STORAGE

Temperature	35°F to 110°F (1.7°C to 44°C) DO NOT FREEZE
Shelf Life	One year (unopened)
Flammability	Non-f ammable

Underwriters Laboratories Inc.®
LISTED
17NF
UL 181A-M
FOR USE WITH U.L. LISTED RIGID FIBERGLASS AIR DUCTS OR CONNECTORS.
UL 181B-M
FOR USE WITH U.L. LISTED FLEXIBLE AIR DUCTS OR CONNECTORS

PRECAUTIONS

Surface must be clean and free of moisture, contamination and foreign matter. Do not allow this product to freeze. Apply when temperatures will not fall below freezing for at least 36–48 hours, depending on temperature and humidity. Do not apply this product where temperatures will exceed 200°F. Keep out of the reach of children. Review MSDS for complete safety information prior to use. DO NOT use where acidic or alkaline chemicals are present (ie., lab fume hood, vents, etc.)

For Industrial Professional Use Only.

CARLISLE HVAC PRODUCTS

USA: 900 Hensley Lane, Wylie, TX 75098 • (877) 495-4822
Canada: 2100 Remembrance Road, Lachine, QC H8S 1X3 • (800) 544-5535
www.carlislehvac.com

P/N 605681 - CCWI-181 TDS 01/08/13

Date Received: 8/13/2018
Date Reviewed: 8/20/2018

Reviewed by: T Morris	**Work Order Number:** 90170-079
Submittal Number: 233300-01	**Contract Number:** CA1435129
Specification Number: 233300	**Project:** Prince Frederick Fire & Life Safety Phase 2
Specification Name: Fire Dampers	**Doc Id:** 24783

The following has been reviewed for general arrangement. Any approval is subject to compliance with all contract requirements. Detailed dimensions and quantities have not been checked.

Comments and Actions

ITEM	DESCRIPTION/COMMENT	ACTION
Fire Damper	No comments	A

Action Codes:

A– Approved	**AN** – Approved as noted
ANR – Approved as noted; return record copy	**RR** – Revise and resubmit
REJ – Rejected	**RA** – Receipt acknowledged

Submittal Transmittal Cover Sheet

Gen. Contractor; SE Davis Const. Contact: Jeff Holt, PM Address: P.O. Box 1008 La Plata MD, 20646 Phone: O 301-870-2400 email; jeff@sedavisconstruction.com	Arch./Eng. WRA Contact; Kim Triszczuk Address; 138 State Highway Annaplois MD 21401 Phone; 410-474-7257 email; KTriszczuk@sha.state.md.us	Project; SHA - Prince Frederick Life Safety Renovations Address; Rte. 4 south Prince Frederick MD P.O.C. Phone

GC Submittal #	CA1435129-233300
Subcontractor Name	All Weather Mechanical
Subcontractor Submittal #	4
Spec. # Dwg.	233300.2.5
Section Title	Fire Dampers

General Contractors stamp/initials 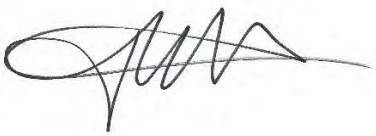	Architects stamp
Engineers Stamp	

LLOYD INDUSTRIES INC.

WWW.FIREDAMPER.COM

FIRE DAMPER

MODEL:
75BH& 75BV (1-1/2 HR rating)

APPLICATION

The model 75B is an out of stream fire damper. It is approved for use in walls, floors, and partitions with fire resistance ratings less than 2 hours. This model carries a 1-1/2 hour UL fire damper label.

RATING:

UL CLASSIFIED: UL 555 Fire Resistance Rating
Fire resistance rated 1-1/2 Hours
Partitions materials rated 2 Hours or less

Model 75B meets the requirements for fire dampers established by:
CSFM California State Fire Marshal
Fire Damper Listing (#3225-1417:102)

Standard Construction

Frame: 22 Ga. galvanized steel
Blade: 22 Ga. galvanized steel
Closure Spring: Negator stainless steel
Fusible Link: 165°F
Mounting: Horizontal or vertical

Optional Material:
Type 316 stainless steel

	Single Section		Multiple Section
	Minimum Size (WxH)	Maximum Size (WxH)	Maximum Size (WxH)
Vertical	4"x3"	60"x53"	120"x53"
Horizontal	4"x5"	60"x53"	NA

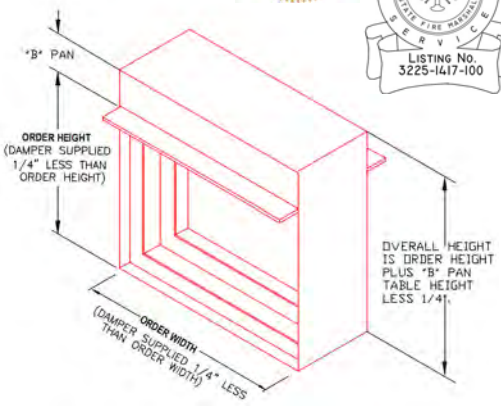

Model: 75BH
(Horizontal Mount)

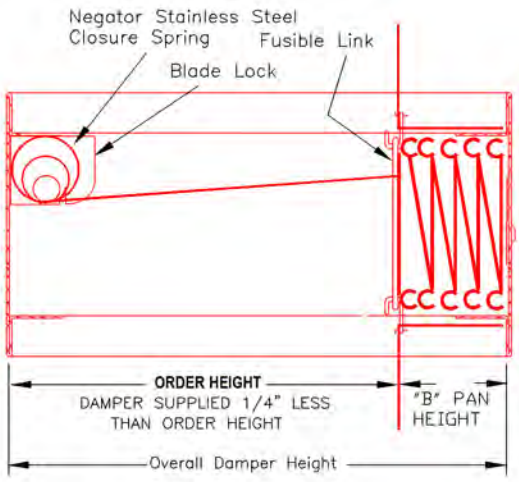

Model: 75BV
(Vertical Mount)

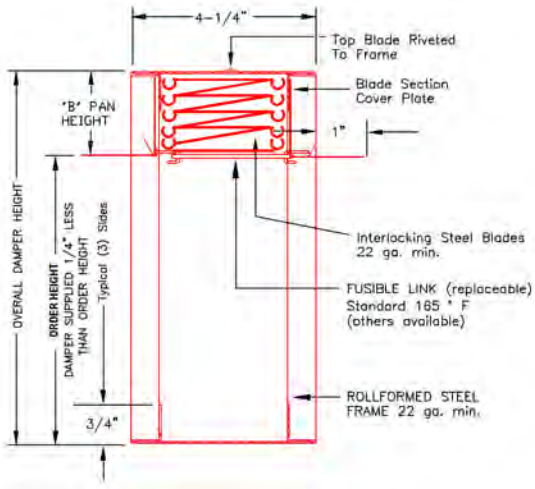

Note:
*Please see "B" PAN Sizing Chart for the "B" PAN Height.

Damper supplied 1/4"less than order Width and Height.

231 Commerce Dr. Montgomeryville, PA 18936
Tel: 215-412-4445 Fax: 215-412-4409
Email: lloydind@firedamper.com

138 Industrial Loop West, Orange Park, FL 32073
Tel: 904-541-1655 Fax: 904-541-1657
Email: lloydind1@firedamper.com

B1, 4/F., Luen Ming Hing Factory Building
36 Mok Cheong St.,
To Kwa Wan, Kowloon, H. K.
Tel: 852-2760-4188 Fax: 852-2760-4177
Email: tatanlexyim@lloydasia.com

Website: www.firedamper.com

*ALL STATED SPECIFICATIONS ARE SUBJECT TO UPDATE WITHOUT NOTICE OR OBLIGATION.

Lloyd Industries Inc. 2017

Pos. / Neg. 2" WG Static Pressure Chart

THIS CHART IS BASED ON 2005 SMACNA STANDARDS

THIS CHART IS FOR DUCT LENGTHS 5FT MAXIMUM LENGTH

Longitudinal Seam: Pittsburgh Snaplock

Duct to manufactured from G90 galvanized steel

DUCT DIMENSIONS	GUAGE	CONNECTIONS	REINFORCEMENTS
12in and under	26	Slip and Drive	None
13 – 16 in	24	Slip and Drive	None
17 – 29 in	24	Standing S Slip and Drive	None
30 – 54 in	22	TDC	None
55 – 84 in	20	TDC	None
84 and over	18	TDC	None

SHRINK WRAP with PSA

Product Data Sheet

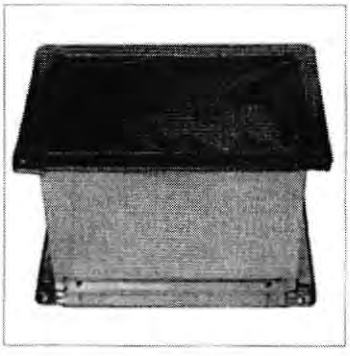

Features

No need to tape
No loose ends flapping
The product is easy to put on and easy to take off
Does not leave any residue
Resists tearing due to its high rubber content
No VOC's - Meets LEEDS® Requirements
UV Resistant
Waterproof

Description

Elgen's Shrink Wrap with PSA is a polyethylene film with adhesive. Elgen's Shrink Wrap with PSA is used as an alternative to a polyethylene film that is secured to the duct wall with tape.

Elgen's Shrink Wrap with PSA is used on any exposed sections of the duct work. It prevents outside debris from entering the ductwork and contaminating the duct work.

Optional Construction

Available Roll Sizes:
2' - 3' - 4' - 5'

Available Thickness:
2mil - 3mil - 4.5 mil

Available Colors:
Blue - Clear - Black - Green - Orange - Red

Standard Construction

Designed to adhere to the following metals:

Galvanized, stainless steel, aluminum , aluminized, galvaneal(paint grip), PCD coated, black iron.

Thickness (mil)	Minimum Elongation (%)
2	400
3	600
4.5	800

Packaging

Roll Sizes (ft)	Length per Roll (ft)	Skid Qty (roll)
2	200	300
3	200	200
4	200	150
5	200	125

Guarantee

All Elgen products are guaranteed by Elgen Manufacturing against defective material.

Elgen Manufacturing
10 Railroad Ave, Closter NJ 07624
Tel: 800.503.9805 :: Fax: 201.964.9030
info@elgenmfg.com :: www.elgenmfg.com

ALL STATED SPECIFICATION ARE SUBJECT TO CHANGE WITHOUT NOTICE OR OBLIGATION

Johns Manville

Duct Liner PM

Fiber Glass Duct Liner

Description

Duct Liner PM is a flexible duct liner insulation made from strong, glass fibers bonded with a thermosetting resin. The airstream surface is protected using a durable glass mat facing that contains an EPA-registered antimicrobial agent. The flexible glass mat also provides a smooth airstream surface.

Factory-Applied Edge Coating

Edge coating is factory applied to the edges of the liner core, ensuring coverage of the leading edges per NAIMA/SMACNA requirements. Shop fabrication cuts may be coated with SuperSeal® edge treatment (refer to publication AHS-202).

Uses

Duct Liner PM is specifically designed for lining sheet metal ducts in air conditioning, heating and ventilating systems, providing superior acoustical and thermal performance.

General Properties

Operating temperature (max.) – ASTM C 411	250°F (121°C)
Air velocity (max.) – ASTM C 1071	5000 fpm (25.4 m/sec)
Fungi resistance – ASTM C 1338	Does not breed or promote
Fungi resistance – ASTM G 21	No growth
Bacteria resistance – ASTM G 22	No growth

Standard Thicknesses and Packaging

Thickness		Roll Length		Roll Widths for All Thicknesses*	
in	mm	lineal feet	lineal meters	in	mm
½	13	100, 150, 200	31, 46, 61	34 to 36	864 to 914
1	25	50, 100, 150, 200	15, 31, 46, 61	44 to 48	1118 to 1219
1½	38	50, 100	15, 31	56 to 60	1422 to 1524
2	51	50	15	66 to 72	1676 to 1829

**Available in ¼" (6.4 mm) increments.*

Contact your Regional Sales Office for stock items and availability of special sizes.

Surface Burning Characteristics

Duct Liner PM meets the Surface Burning Characteristics and Limited Combustibility of the following standards:

Standard/Test Method

- ASTM E 84
- UL 723
- NFPA 255
- NFPA 90A and 90B
- NFPA 259
- CAN/ULC S102-M88

Maximum Flame Spread Index	25
Maximum Smoke Developed Index	50

UL labels supplied on packages when requested on order.

Specification Compliance

- ASTM C 1071, Type I
- ICC Compliant
- California Title 24
- ASHRAE 62
- MEA 353-93-M
- SMACNA Application Standards for Duct Liners
- NAIMA Fibrous Glass Duct Liner Installation Standard
- Canada: CGSB 51-GP-11M and CAN/CGSB 51.11

Advantages

Improves Indoor Building Environment. Duct Liner PM improves indoor environmental quality by helping to control both temperature and sound.

Will Not Support Microbial Growth. The airstream surface of Duct Liner PM is treated with an antimicrobial agent specifically registered with the EPA for HVAC applications to resist potential growth of fungus or bacteria on the airstream surface.

Duct Liner PM duct liner meets all requirements for fungi and bacterial resistance. Tests were conducted in accordance with ASTM C 1338 and ASTM G 21 (fungi testing) and ASTM G 22 (bacteria resistance testing). Detailed information is available in Johns Manville fact sheet HSE-103FS.

Note: As with any type of surface, microbial growth may occur in accumulated duct system dirt, given certain conditions. This risk is minimized with proper design, filtration, maintenance and operation of the HVAC system.

Cleanability. If HVAC system cleaning is required, the airstream surface may be cleaned with industry-recognized dry methods. See the North American Insulation Manufacturers Association (NAIMA) "Cleaning Fibrous Glass Insulated Air Duct Systems."

Green Building Attributes

GREENGUARD® certification is not intended for residential environments. Instead, the certification is intended only for buildings meeting ASHRAE 62.1-2007 commercial building ventilation rates. This certification is proof that the product meets the GREENGUARD Environmental Institute's indoor air quality standards and product emission standards for VOCs.

SCS CERTIFIED
Minimum 25% Recycled Content
5% Pre-consumer
20% Post-consumer
SCIENTIFIC CERTIFICATION SYSTEMS
SCS-MC-01073

Duct Liner PM

Fiber Glass Duct Liner

Installation

Duct Liner PM installation must be performed in accordance with the requirements of the NAIMA Fibrous Glass Duct Liner Standards or SMACNA HVAC Duct Construction Standard. All transverse edges, or any edges exposed to airflow, must be coated with an approved duct liner coating material, such as Johns Manville SuperSeal products.

Minimizes Pre-installation Damage. Duct Liner PM's durable glass mat facing is resistant to damage that can occur during in-shop handling, fabrication, jobsite shipping and installation.

Easy to Fabricate. Duct Liner PM is lightweight and easy to handle. Clean, even edges can be accurately cut with regular shop tools.

Thermal Performance

Thickness		R-value		Conductance	
in	mm	(hr•ft²•°F)/Btu	m²•°C/W	Btu/(hr•ft²•°F)	W/m²•°C
½	13	2.2	0.39	0.46	2.61
1	25	4.2	0.74	0.24	1.36
1½	38	6.3	1.11	0.16	0.91
2	51	8.0	1.41	0.13	0.74

R-value and conductance are calculated from the material thermal conductivity tested in accordance with ASTM C 518 at 75°F (24°C) mean temperature.

Sound Absorption Coefficients (Type "A" Mounting)

Thickness		Sound Absorption Coefficient at Frequency (Cycles per Second) of						
in	mm	125	250	500	1000	2000	4000	NRC
½	13	0.08	0.17	0.42	0.63	0.77	0.89	0.50
1	25	0.14	0.28	0.64	0.85	0.97	1.09	0.70
1½	38	0.24	0.51	0.90	0.99	1.01	1.10	0.85
2	51	0.26	0.69	1.02	1.08	1.03	1.10	0.95

Coefficients were tested in accordance with ASTM C 423 and ASTM E 795.

ISO 9000 Certification

Johns Manville mechanical insulation products are designed, manufactured and tested in our own facilities, which are certified and registered to stringent ISO 9000 (ANSI/ASQC 90) series quality standards. This certification, along with regular, independent third-party auditing for compliance, is your assurance that Johns Manville products deliver consistent high quality.

Johns Manville

717 17th St.
Denver, CO 80202
(800) 654-3103
specJM.com

AHS-424 02/10 (Replaces 10/09)

North American Sales Offices, Insulation Systems

Eastern Region
P.O. Box 158
Defiance, OH 43512
(800) 334-2399
Fax: (419) 784-7866

Western Region and Canada
P.O. Box 5108
Denver, CO 80217
(800) 368-4431
Fax: (303) 978-4661

The physical and chemical properties of Duct Liner PM listed herein represent typical, average values obtained in accordance with accepted test methods and are subject to normal manufacturing variations. They are supplied as a technical service and are subject to change without notice. Numerical flame spread and smoke developed ratings are not intended to reflect hazards presented by these or any other materials under actual fire conditions. Check with the Regional Sales Office nearest you to assure current information.

All Johns Manville products are sold subject to Johns Manville's standard Terms and Conditions, including Limited Warranty and Limitation of Remedy. For a copy of the Johns Manville standard Terms and Conditions, Limited Warranty and Limitation of Remedy, and information on other Johns Manville thermal insulation and systems, call (800) 654-3103.

Printed on recycled paper.

© 2010 Johns Manville. Printed in USA.

NOTE:

SEE TYPICAL DUCT BRANCH ENTRY CONDITION IN FIG. 4-6.

METAL NOSING MUST BE USED WHEREVER LINER IS PRECEDED BY UNLINED METAL; OTHERWISE WHEN VELOCITY EXCEEDS 4000 FPM (20.3 MPS) USE METAL NOSING ON EVERY LEADING EDGE. NOSING MAY BE FORMED ON DUCT OR BE CHANNEL OR ZEE ATTACHED BY SCREWS, RIVETS OR WELDS.

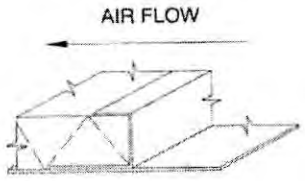

DETAIL - A

METAL NOSING
CHANNEL OR ZEE

INTERIOR WIDTH OF 8" (200 mm) AND LESS DOES NOT REQUIRE PINS.

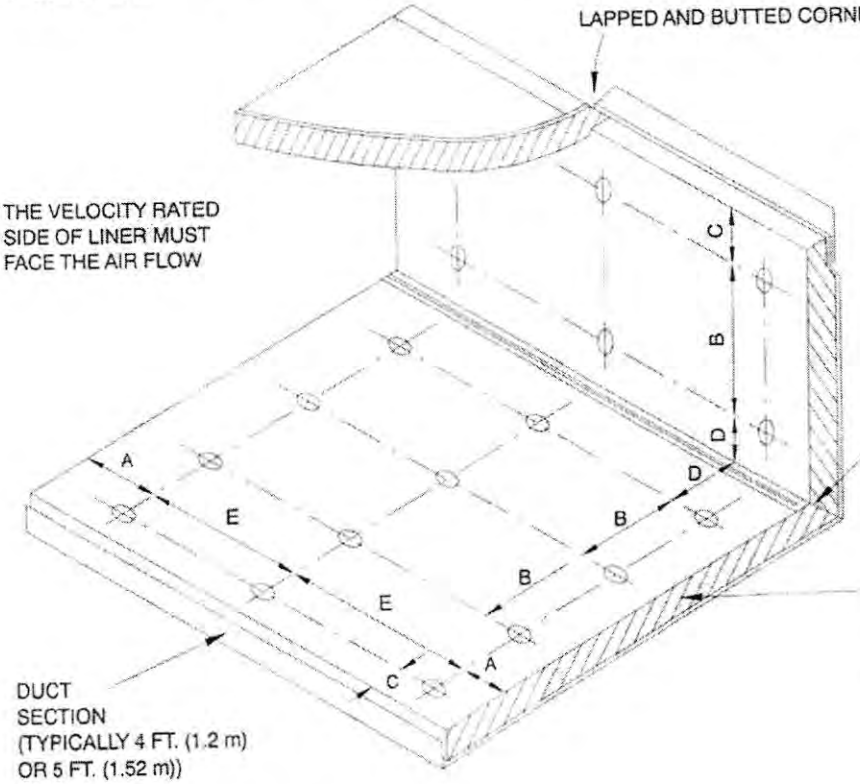

THE VELOCITY RATED SIDE OF LINER MUST FACE THE AIR FLOW

PLACE PINS 3" (76 mm) ALONG EACH SIDE OF A BUTTED LONGITUDINAL LINER SEAM THAT IS AWAY FROM A CORNER

ALTERNATE FOLDED CORNER

ALL TRANSVERSE EDGES TO BE COATED WITH ADHESIVE EXCEPT WHEN NOSING IS PRESENT

DUCT SECTION (TYPICALLY 4 FT. (1.2 m) OR 5 FT. (1.52 m))

MAXIMUM SPACING FOR FASTENERS. ACTUAL INTERVALS ARE APPROXIMATE.

LINER ADHERED TO THE DUCT WITH 90% MIN. AREA COVERAGE OF ADHESIVE

"A" PIN ROW MAY BE OMITTED WHEN METAL NOSING IS USED. "E" THEN STARTS FROM THE NOSING.

Velocity *	Dimensions				
	A	B	C	D	E
0 - 2500 FPM (0 - 12.7 MPS)	3" (76.2)	12" (305)	4" (102)	6" (152)	18" (457)
2501 - 6000 FPM (12.7 - 30.5 MPS)	3" (76.2)	6" (152)	4" (102)	6" (152)	16" (406)

* UNLESS A LOWER LEVEL IS SET BY MANUFACTURER OR LISTING AGENCY

FIGURE 7-11 FLEXIBLE DUCT LINER INSTALLATION

WATER-BASED LINER ADHESIVE

Product Data Sheet

Description

Elgen's Water - Based Liner Adhesive is an economical, water-based product for bonding insulation to metal surfaces. A non-oxidizing vinyl copolymer adhesive with excellent temperature and moisture resistance after curing, it forms a durable bond that will not become brittle with age.

Standard Construction

Properties	Value
Composition	A high solids, water base adhesive that is non-flammable when wet.
Color	White/Black
Viscosity	2000 to 3000 cps
Solids Content	37% ± 2%
Weight per Gallon	10.0 ± 0.1 #/gallon
Drying time	Tack-free: 3 to 4 hours (depending on humidity and temperature) Complete drying: 2 to 3 days at room temperature
Application and storage	KEEP FROM FREEZING 50°F TO 100°F Store and ship at temperatures above 32°F. Use within 6 months after receipt.
Service temperature	0°F to 180°F
Flammability	Wet - Non-flammable. Dry - Slow burning.
Clean-up	Thin with water. Clean up when wet with warm water. Dry clean up with aromatic or chlorinated solvents.

Features

This adhesive can be sprayed, brushed, or rolled and is designed for both manual and automatic applications. It provides excellent results with easy cleanup. Our duct liner adhesive contains antimicrobial agents that remain effective after the adhesive has cured.

Non-flammable, no unpleasant odors or hazardous fumes. Safe to use in enclosed areas.

Easy clean up with warm water

Good wet-tack

Fast drying with high tack.

Excellent coverage.

Contains zero VOC (volatile organic compounds).

Meet Requirements For Iowa Precision Coil Lines.

LEED Compliant

Meets requirements of NFPA 90A & 90B
Meets requirements of ASTM C-916

Packaging

5 Gallon Pails
52 Gallon Drums

Guarantee

All Elgen products are guaranteed by Elgen Manufacturing against defective material.

Elgen Manufacturing
10 Railroad Ave, Closter NJ 07624
Tel: 800.503.9805 :: Fax: 201.964.9030
info@elgenmfg.com :: www.elgenmfg.com

ALL STATED SPECIFICATION ARE SUBJECT TO CHANGE WITHOUT NOTICE OR OBLIGATION

AIR-LAG

WATER BASED LAGGING ADHESIVE

LEED COMPLIANT

FEATURES

- *LEED EQ Credit 4.1*
- *Sprayable & trowel grades*
- *Excellent adhesion to lagging fabrics and insulation materials*
- *Cures to a tough, flexible, water resistant film*
- *Protective coating*
- *Extremely durable*

TECHNICAL SPECIFICATIONS	
Packaging	(4) 1gal./case, 2 gal. pail, 5 gal pail
Shelf Life	18 months in unopened containers
Coverage Rate	Approximately 60 sq. feet per gallon depending texture of lagging fabric
Cure Time	Approximately 12 hours, depending on temperature, humidity, and application thickness
Solids Content	58% ± 3% by weight
Weight per gal.	10.5 lbs. ±0.3 lbs.
Color	White, Black
Temperature Limits	Storage and application... 35°F to 110°F Service..... -40°F to 200°F **Protect From Freezing.** If frozen, completely thaw prior to use. Passes 5 Freeze-Thaw Cycles.
Class 1 Smoke and Flame Rating LEED COMPLIANT SCAQMD Rule 1168	UNDERWRITERS LABORATORIES INC. CLASSIFIED CAULKING AND SEALANTS Applied to organic, Reinforced Cement Board. Flame Spread .....10 Smoke Developed .....0 10YF Tested in accordance with UL 723, and ASTM E-84. Satisfies the requirements of NFPA 90A, 90B, and 225.

DESCRIPTION

AIR-LAG is a very durable waterbase adhesive coating that dries to a tough, durable film with excellent flexibility to handle surface expansion and contractions caused by extreme weather conditions, while providing superior UV protection.

RECOMMENDED USES

AIR-LAG is suitable for canvas cloth and fiberglass mesh to thermal insulation over pipe or ductwork.

LAGGING ADHESIVE:

For thermal insulation, pipe coverings, and HVAC ductwork.

EDGE COATING:

Use to coat and encapsulate the loose fibers on the cut edges and tears in fiberglass duct liner, by preventing the fibers from entering the airstream.

APPLICATION INSTRUCTIONS

Prior to application make sure the surface is free of oils, greases, and foreign matter. Brush, palm, or spray ***AIR-LAG*** on the desired surface.

LAGGING ADHESIVE:

Apply a minimum of 20 mils wet film thickness coating to the desired surface. Then apply a reinforcing membrane of canvas cloth or fiberglass mesh to the tack coat. Push the canvas or mesh into the tack coat. Smooth out all bumps or wrinkles. Apply a second coating a minimum of 25 mils wet film thickness. Make sure all the reinforcing membrane is completely coated. Allow the surface to become almost dry, then take your hand and dip it into a bucket of water and smooth out the surface, being careful not to wash off the coating.

EDGE COATING:

Coat all cut edges and tears in the fiberglass duct line.

CLEAN UP:

Use soap and warm water.

Polymer Adhesives Sealant Systems Inc., is proud to be affiliated with the following organizations:

NFPA HARDI UL

POLYMER ADHESIVES

SEALANT SYSTEMS, INC.

www.polymeradhesives.com

501 Garrett Morris Parkway, Mineral Wells, TX 76067 (888) 721-SEAL Fax (888) 921-SEAL

SUBMITTAL RECORD
JOB _____
LOCATION _____
SUBMITTED TO _____
SUBMITTAL PREPARED BY _____
APPROVED BY _____
DATE _____

Submittal Form
DDFDC
Flexible Duct Connector

DESCRIPTION

All air duct installations for heating, cooling or ventilation are attached to mechanical equipment containing a fan or blower. Vibrations, noises and rattles resulting from operation of the fan or blower are transmitted into the metal ducts which carry the noises throughout the system.

In order to isolate the vibration and noises to the source, an air - tight flexible joint, consisting of a fabric which is attached to sheet metal on both side, must be inserted between the equipment and the ductwork. This vibration isolator is called a "Flexible Duct Connector".

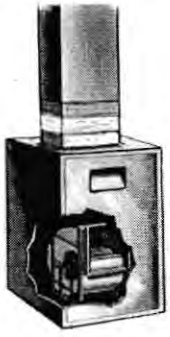

RELATED NFPA 90A & 90B STANDARDS

2-3.2.2 Vibration isolation connectors in duct systems shall be made of an approved flame-retardant fabric or shall consist of sleeve joints with packing of approved material, each having a maximum flame spread index of 25 and a maximum smoke developed index of 50. Exception: Approved flame-retardant fabric having a maximum length of 10 in. (25.4 cm) in the direction of airflow-**NFPA No. 90A 1999**

2-1.1.1 Exception No. 3: Vibration isolation connectors in duct systems shall be made of approved flame-retardant fabric or shall consist of sleeve joints with packing of approved noncombustible material. The fabric shall not exceed 10 in. (254 mm) in length in direction of airflow-**NFPA No. 90B 1999**

FABRIC COMPARISONS	Excelon[5]	Neoprene ☑	Durolon	Insulflex*	Thermafab*	Envirofab	Teflon	Glasseal
UL Classified File #	**R4462**	**R4462**	**R4462**	**n/a**	**R4462**	**R4462**	**n/a**	**R4462**
Continuous Temp. Range	-40°F to 180°F	-40°F to 200°F	-40°F to 250°F	-40°F to 180°F	-65°F to 500°F	-40°F to 200°F	-150°F to 500°F	-40°F - 180°F
Color	Black or Spec Chek Orange	Black	White	Black	Grey	Black/White	Grey Outside/ Beige Inside	Grey & Black
Weight Per Square Yard	22	30	26	28 (composite weight)	17	18	16.5	16
Abrasion Resistance[1]	15,000 cycles	600 cycles	500 cycles	500 cycles	125 cycles	15,000 cycles	1,000 cycles	1,400 cycles
Leakage Resistance[2]	350	595	250	125	400	350	650	120
Tear Strength[3]	100/100	12/12	12/12	8/11	50/40	60/80	50/30	8/9
Tensile Strength[4]	240/220	500/450	225/300	70/70	200/150	200/190	400/300	90/90
Base Fabric	Woven Nylon/ Polyester Blend	Woven Fiberglass	Woven Fiberglass	Polyester	Woven Fiberglass	Polyester	Fiberglass/ Satin Weave	Woven Fiberglass
Coating	Vinyl	Neoprene	Hypalon	Vinyl	Silicon Rubber	Proprietary Vinyl Blend	Teflon	Vinyl
Features	High Tear Strength High Abrasion Resistance	General Purpose	Excellent Ozone and Weathering Resistance Best Overall Acid Resistance	Low Smoke Emission Insulated 3-4-3 Configuration	Very Low Smoke Emission High Temperature Resistant	"Green" 10% Recycled Content UV Reflective Puncture Resistant	High Temperature Resistant High Corrosion Resistance Excellent Chemical Resistance	Resistant to Acids & Chemical Fumes Resistant to Grease & Alkalies Unaffected By Mildew
Codes								
Metal-Fab 3x3x3 Grip Loc	MBX333 (#10159) MSPX333 (#10263)	MFN333 (#10003)	MFD333 (#10002)	IDC343 (#10173) *Gauge: 28 +Guard Loc	MFT333 (#10005)	MEV333 (#10301)	MCT333 (#10278)	MGL333 (#10004)
Super Metal-Fab 3x6x3 Grip Loc	MB6X363 (#10160) MSP6X363 (#10265)	MF6N363 (#10012)	MF6D363 (#10011)	Not Available	MF6T363 (#10013)	Not Available	Not Available	MF6G363 (#10016)
TDC/TDF 4x4x4 Grip Loc	MBX444 (#10210) MSPX444 (#10264) MBX464 (#10214)	MFN444 (#10211) MFN464 (#10246)	MFD444 (#10237) MFD464 (#10245)	Not Available	Not Available	MEV444 (#10300)	MCT444 (#10279)	Not Available

All Metal-Fab, Super Metal-Fab and TDC/TDF Flexible Duct Connectors are manufactured with 24 gauge galvanized steel.
Other materials are available upon request.
Stainless Steel configurations utilize 304 or 316 grade material.

Notes:
1. Abrasion resistance as per Federal Test Standard 191 Method #5306 using CS 17 wheel with 250 Gram load.
2. Leakage resistance as per Federal Test Standard 191 Method #5512. Results in P.S.I.
(To convert inches of water multiply P.S.I. x 27.176.)
3. Tear strength in tongue pounds as per Federal Test Standard 191 Method #5134.1 (warp/fill).
4. Tensile strength in grab pounds as per Federal Test Standard 191 Method #5100 (warp/fill).
5. Standard Excelon is not L.A. city approved. Use Excelon-LA when L.A. city approval is necessary. (See Specification Form Excelon-LA - 203)

All Duro Dyne Flexible Duct Connector Products are suitable for pressures of -10 to +15 wg. Duro Dyne's standard 'single fold' metal to fabric grip has been tested by an independent testing laboratory to withstand a negative pressure of -10" WC and a positive pressure of +17.25" WC with no tearing or visible separation.

SUGGESTED SPECIFICATION

Vibration Isolating Flexible Duct Connector For Heating, Cooling & Exhaust Supplies & Returns.

At the inlet and discharge of all air handling equipment(unless otherwise noted) furnish and install vibration isolators. Vibration isolators shall be a coated woven fabric named _____ and shall be "Underwriters Laboratories Classified".

Vibration isolators shall have a tear strength of not less then _____, and a continuous temperature range of _____. Vibration isolators shall be preassembled metal to exposed fabric to metal. Fabric and metal shall be joined by means of a double lock seam.

Vibration isolators shall be code_____ (called Flexible Duct Connectors) as manufactured by Duro Dyne Corporation, Bay Shore, N.Y.

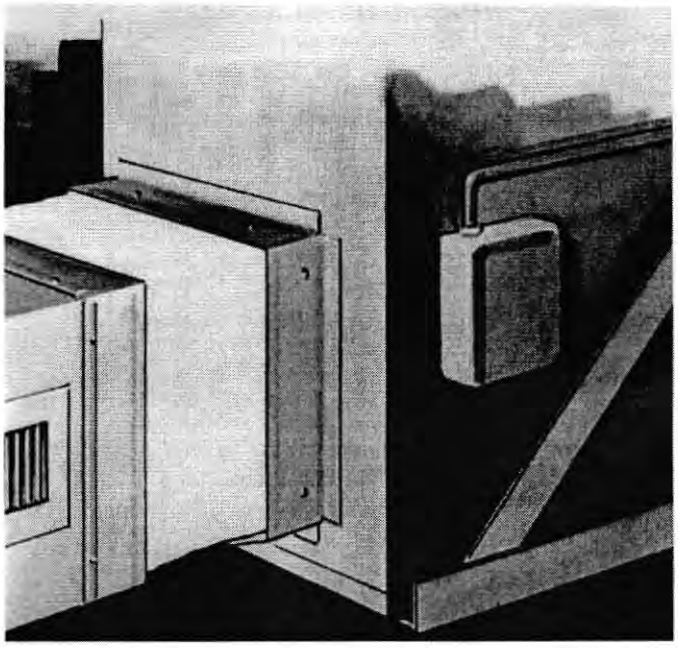

DURO DYNE®

Specifications

All Listed Duro Dyne Flexible Duct Connector Fabrics are designed to meet the following specifications:

1. MIL-C-20696B Para. 4.4.3. (Oil Resistance).
2. MIL-C-20696B Para. 4.4.4. (Hydro Carbon Resistance).
3. NFPA 90A Installation of Air Conditioning and Ventilating Systems Para. 4.3.2.2 2012 Edition.
4. NFPA 90B Warm air heating and air conditioning systems. Para. 4.1.1.1.3.1 2012 Edition. *(*See note 1 below)*
5. NFPA701 Tests for Flame Propagation of Fabrics and film.
6. California State Fire Marshal Approved.
7. Los Angeles City Approved. *(*See note 2 below)*
8. Denver City Approved.

All Duro Dyne Flexible Duct Connectors utilize galvanized steel meeting ASTM-A-525 G 60 or better.

Duro Dyne Flexible Duct Connectors are also available with 300 series stainless steel or 3003 aluminum upon request.

**Note 1* - Standard Excelon does not currently meet NFPA 90B 2012 but does meet all previous editions. Use Excelon-LA if NFPA 90B 2012 approval is necessary.

***Note 2* - Standard Excelon is not LA city approved. Use Excelon-LA when LA city approval is necessary. (See Submittal Form for Excelon-LA)

CHEMICAL RESISTANCE

(X = Extremely Resistant)
(NR = Not Recommended)
(O = No Data Available)

Chemical	Excelon	Neoprene	Durolon	Insulflex	Thermafab	Envirofab	Teflon	Glasseal
Acetic Acid	NR	X	X	NR	NR	NR	X	NR
Aluminum Chloride	X	X	X	X	X	X	X	X
Aluminum Sulfate	X	X	X	X	X	X	X	X
Ammonia (Anhyd)	X	X	X	X	X	X	X	X
Ammonium Hydroxide	X	X	X	X	X	X	X	X
Ammonium Sulfate	X	X	X	X	X	X	X	X
Barium Sulfide	X	X	X	X	O	X	X	X
Black Sulfate Liquor	X	X	X	X	NR	X	X	X
Boric Acid	X	X	X	X	X	X	X	X
Butyl Alcohol	NR	X	X	NR	NR	NR	X	NR
Cadmium Plating Solution	X	NR	NR	NR	O	X	O	X
Calcium Chloride	X	X	X	X	X	X	X	X
Calcium Hypochlorite	X	NR	X	X	O	X	X	X
Chlorine Water	X	NR	NR	X	NR	X	O	X
Chromic Acid	X	NR	X	X	O	X	X	X
Chromium Plating Solution	X	O	O	NR	O	X	O	X
Citric Acid	X	X	X	X	X	X	X	X
Copper Chloride	X	X	X	X	O	X	X	X
Copper Sulfate	X	X	X	X	O	X	X	X
Cottonseed Oil	X	X	X	X	X	X	O	X
Diacetone Alcohol	NR	X	X	NR	O	NR	O	NR
Disodium Phosphate	X	NR	NR	X	O	X	O	X
Ethyl Alcohol	NR	X	X	NR	NR	NR	X	NR
Ethylene Glycol	NR	X	X	NR	X	NR	X	NR
Ferric Chloride	X	X	X	X	X	X	X	X
Ferric Sulfate	X	X	X	X	X	X	X	X
Fluroboric Acid	X	X	X	NR	O	X	O	X
Formaldehyde (40%)	X	X	X	X	O	X	X	X
Formic Acid	X	X	X	X	O	X	X	X
Glucose	X	X	X	X	X	X	X	X
Glycerine	NR	X	X	NR	X	NR	X	NR
Heptane	NR	X	X	NR	O	NR	X	NR
Hexane	NR	X	X	NR	O	NR	X	NR
Hydrobromic Acid (40%)	NR	X	X	NR	O	NR	X	NR
Hydrochloric Acid (conc)	NR	X	X	NR	NR	NR	X	NR

Chemical	Excelon	Neoprene	Durolon	Insulflex	Thermafab	Envirofab	Teflon	Glasseal
Hydrofluoric Acid (100%)	NR	X	X	NR	NR	NR	X	NR
Hydrogen Peroxide	X	NR	X	X	X	X	X	X
Hydrogen Sulfide	X	X	X	X	O	X	X	X
Lactic Acid	NR	X	X	NR	O	NR	X	NR
Linseed Oil	NR	X	X	NR	X	NR	O	NR
Magnesium Chloride	NR	X	X	NR	NR	NR	X	NR
Maleic Acid	X	NR	X	X	X	X	O	X
Methyl Alcohol	NR	X	X	NR	NR	NR	X	NR
Methyl Cellosolve	NR	X	X	NR	NR	NR	O	NR
Mineral Oil	X	X	X	X	NR	X	X	X
Naptha	NR	NR	NR	NR	X	NR	X	NR
Nickel Chloride	X	X	X	X	O	X	X	X
Nickel Sulfate	X	X	X	X	X	X	X	X
Nitric Acid (40%)	X	NR	X	X	NR	X	X	X
Oleic Acid	X	NR	NR	X	NR	X	X	X
Oleum	NR	NR	X	NR	O	NR	X	NR
Oxalic Acid	X	X	X	X	X	X	X	X
Phosphoric Acid (85%)	NR	X	X	NR	X	NR	X	NR
Pickling Solution	X	NR	X	X	O	X	O	X
Potassium Chloride	X	X	X	X	O	X	O	X
Potassium Cyanide	X	X	X	X	O	X	X	X
Potassium Dichromate	X	X	X	X	O	X	X	X
Potassium Hydroxide (40%)	X	X	X	NR	X	X	X	X
Potassium Sulfate	X	X	X	X	O	X	X	X
Propyl Alcohol	NR	X	X	NR	NR	NR	O	NR
Sodium Chloride	X	X	X	X	X	X	X	X
Sodium Hydroxide (40%)	NR	X	X	NR	X	NR	X	NR
Sodium Hypochlorite	NR	NR	X	NR	NR	NR	X	NR
Steam	NR	X	NR	NR	O	NR	X	NR
Sulfur Dioxide (Liquid)	NR	X	X	NR	X	NR	X	NR
Sulfuric Acid (50%)	X	NR	X	NR	NR	X	X	X
Sulfuric Acid (over 50%)	NR	NR	X	NR	NR	NR	X	NR
Tannic Acid	X	X	X	X	O	X	X	X
Vinegar	X	X	X	X	X	X	X	X

Duro Dyne East Division, Bay Shore, NY 631-249-9000 Fax: 631-249-8346
Duro Dyne Midwest Division, Fairfield, OH 513-870-6000 Fax: 513-870-6005
Duro Dyne West Division, Fontana, CA 562-926-1774 Fax: 562-926-5778
Duro Dyne Canada, Lachine, Quebec, Canada 514-422-9760 Fax: 514-636-0328
www.durodyne.com E-mail: durodyne@durodyne.com

DURO DYNE®

©2014 Duro Dyne Corporation
Printed in USA 7/14
BO010403

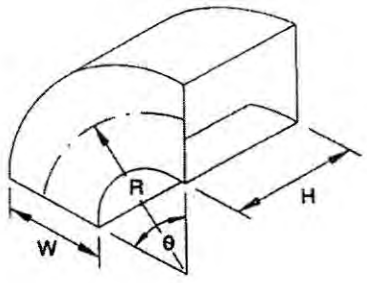

TYPE RE 1
RADIUS ELBOW

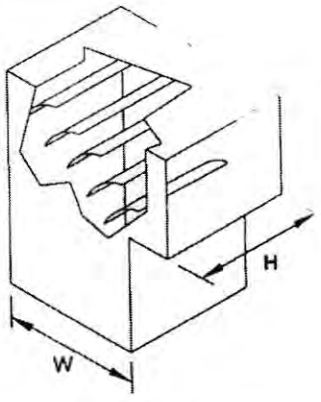

TYPE RE 2
SQUARE THROAT ELBOW
WITH VANES

CENTERLINE R = $\frac{3W}{2}$ UNLESS OTHERWISE SPECIFIED - IS NOT RESTRICTED TO 90°

SQUARE THROAT, $\frac{R}{W}$ = 0.5, MAY BE USED, UP TO 1000 FPM (5 mps).

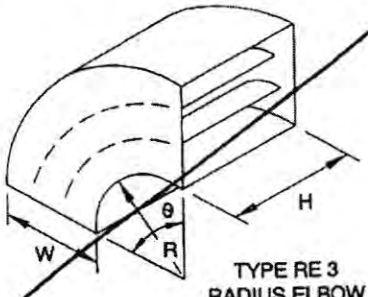

TYPE RE 3
RADIUS ELBOW
WITH VANES

NOTE:
FOR RE 3 *SEE* SPLITTER VANES IN SMACNA *HVAC SYSTEMS DUCT DESIGN*

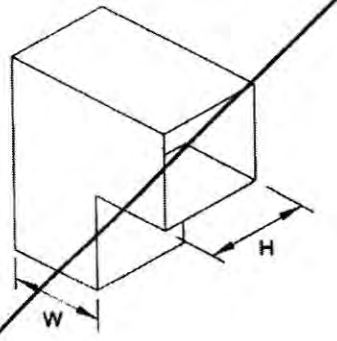

TYPE RE 4
SQUARE THROAT ELBOW
WITHOUT VANES
(1000 FPM (5 mps) MAXIMUM VELOCITY)

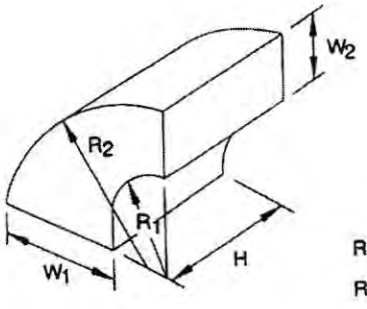

R_1 = 3/4 W_1

R_2 = R_1 + W_2

TYPE RE 5
DUAL RADIUS ELBOW

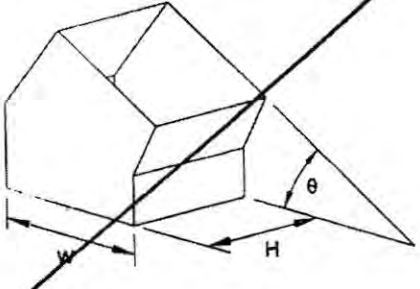

TYPE RE 6
MITERED ELBOW

BEAD, CROSSBREAK AND REINFORCE FLAT SURFACES AS IN STRAIGHT DUCT

PAGE 1 OF 2

FIGURE 4–2 RECTANGULAR ELBOWS

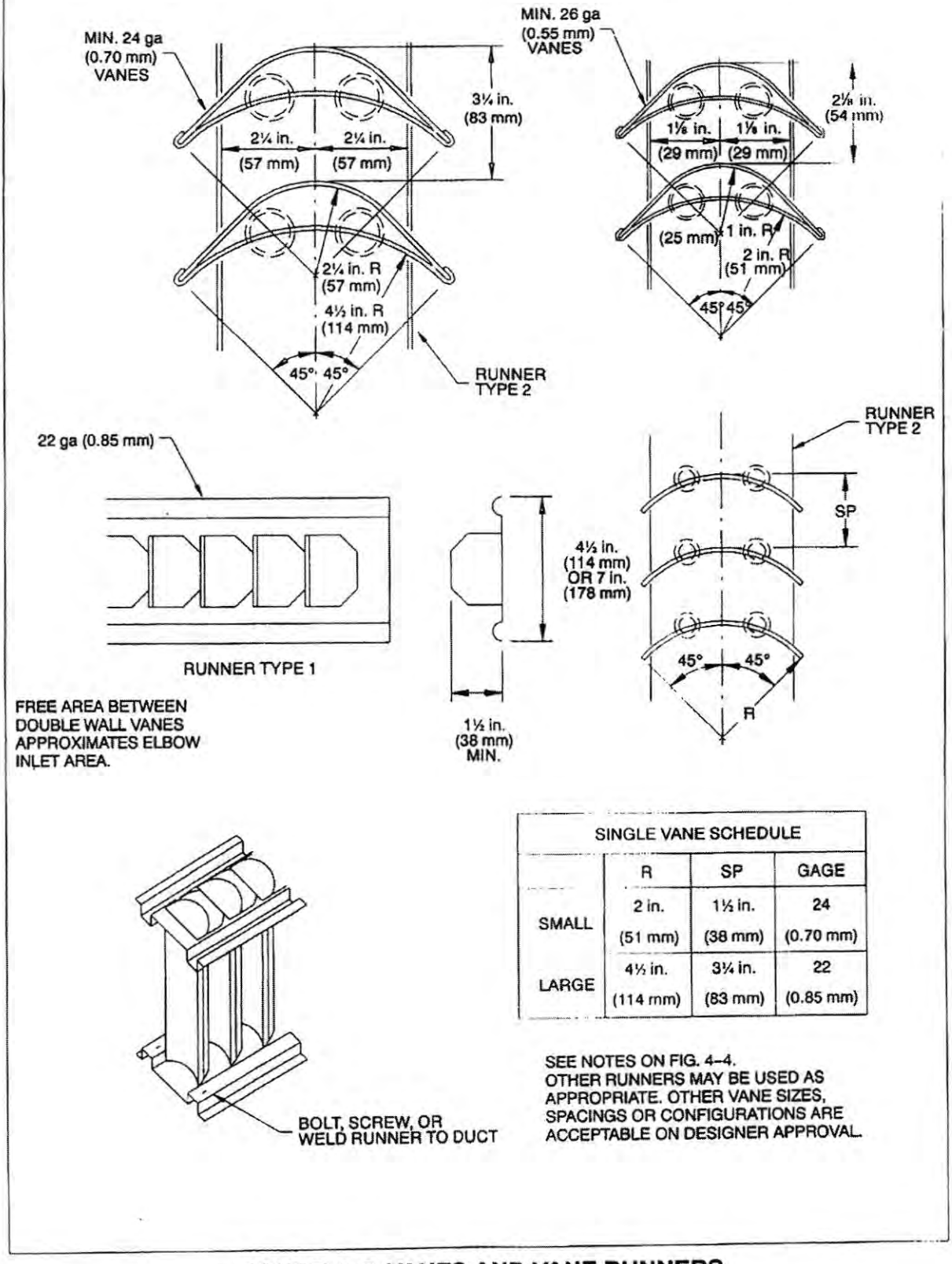

SINGLE VANE SCHEDULE			
	R	SP	GAGE
SMALL	2 in. (51 mm)	1½ in. (38 mm)	24 (0.70 mm)
LARGE	4½ in. (114 mm)	3¼ in. (83 mm)	22 (0.85 mm)

SEE NOTES ON FIG. 4–4.
OTHER RUNNERS MAY BE USED AS APPROPRIATE. OTHER VANE SIZES, SPACINGS OR CONFIGURATIONS ARE ACCEPTABLE ON DESIGNER APPROVAL.

FIGURE 4–3 VANES AND VANE RUNNERS

OFFSETS 2 AND 3 AND TRANSITIONS MAY HAVE EQUAL OR UNEQUAL INLET AND OUTLET AREAS. TRANSITIONS MAY CONVERT DUCT PROFILES TO ANY COMBINATION FOR RECTANGULAR, ROUND OR FLAT OVAL SHAPES.

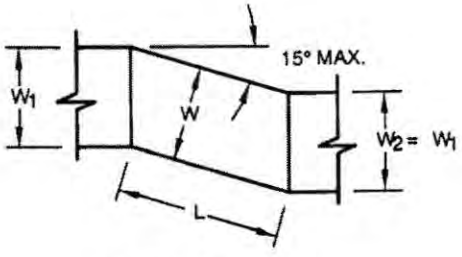

OFFSET TYPE 1
(ANGLED)

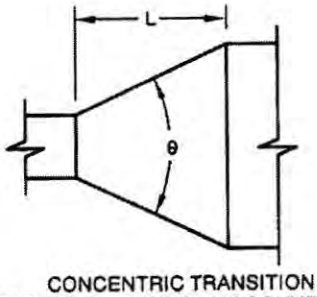

CONCENTRIC TRANSITION
θ MAX. 45° DIVERGING, 60° CONVERGING

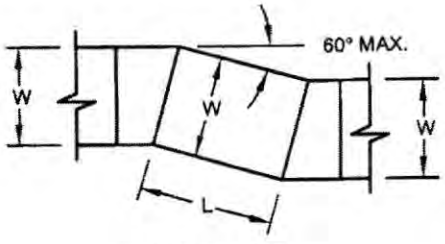

OFFSET TYPE 2
(MITERED)

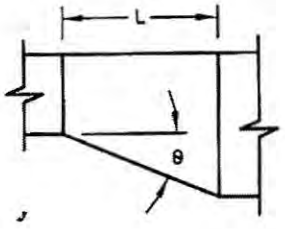

ECCENTRIC TRANSITION
θ MAX. 30°
(EXCEPT 45° IS PERMITTED
AT ROUND TO FLAT OVAL)

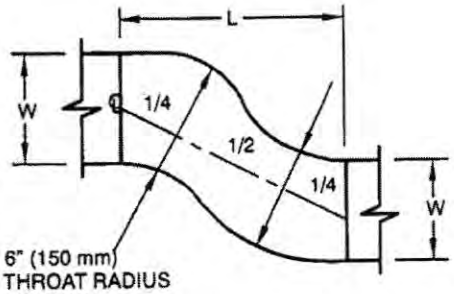

OFFSET TYPE 3
(RADIUSSED
OR OGEE)

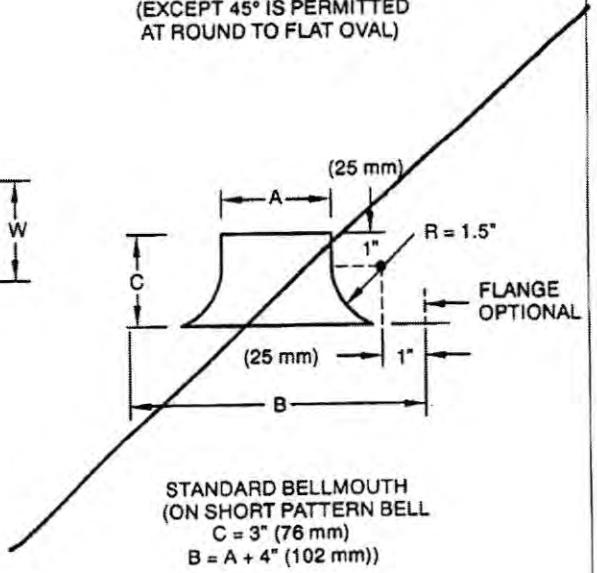

STANDARD BELLMOUTH
(ON SHORT PATTERN BELL
C = 3" (76 mm)
B = A + 4" (102 mm))

FIGURE 4-7 OFFSETS AND TRANSITIONS

Press-On Collars

Product Data Sheet

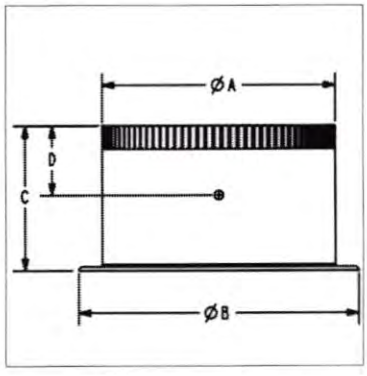

Description

Elgen's Press-On Collar is used for Low & Medium Pressure applications.

Standard Construction

Manufactured using 24 GA ASTM A-653 G60 material
1" Flange
1/8" x 1" Polyethylene "High Density" Gasket

A (in)	B (in)	C (in)	D (in)
4	6	6	3
5	7	6	3
6	8	6	3
7	9	6	3
8	10	6	3
9	11	6	3
10	12	6	3
12	14	6	3
14	16	6	3
16	18	6	3

Features

Meets SMACNA requirements - 2005 3rd Edition Section 4.8 Figure 4-6
Made from one piece of metal
Welded Seam for added strength and low leakage
Pressure rating +40" Water gauge
Gasket - 1/8" x 1" Two Sided Neoprene Gasket
MADE IN USA with USA Steel
Union Made Yellow Label

Optional Construction

All Volume Dampers for air control
~~Elgen Super Standoff~~
~~Insulation Guard~~
~~Scoop~~
~~No Gasket~~

~~30 GA Galvanized~~
~~G90 Galvanized~~
~~Stainless Steel 304~~
~~Stainless Steel 316~~
~~Aluminum~~
~~PCD~~
~~Galvanneal (Paint Grip)~~
~~Agion (Antimicrobial Coating)~~

Packaging

Size (in)	Tray Qty	Skid Qty	Weight per Skid (lbs)
4	MTO	MTO	N/A
5	MTO	MTO	N/A
6	9	300	310
7	MTO	MTO	N/A
8	9	200	280
9	MTO	MTO	N/A
10	9	120	210
12	9	90	200
14	9	90	220
16	9	90	180

Guarantee

All Elgen products are guaranteed by Elgen Manufacturing against defective material.

Elgen Manufacturing
10 Railroad Ave, Closter NJ 07624
Tel: 800.503.9805 :: Fax: 201.964.9030
info@elgenmfg.com :: www.elgenmfg.com

ALL STATED SPECIFICATION ARE SUBJECT TO CHANGE WITHOUT NOTICE OR OBLIGATION

Snap Lock Pipe

Product Data Sheet

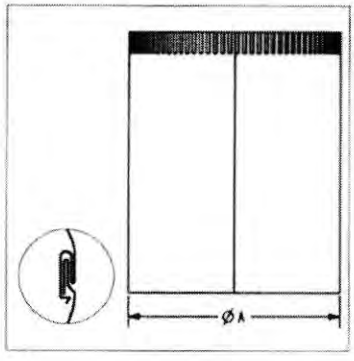

Features

Meets SMACNA RL-8 Longitudial Seam-page 3.5 figure 3-2 in 2005 3rd edition
Reeves Lock and Button Lock come standard on every piece.
Pressure rating (-1" to +2" water gauge)
MADE IN USA with USA Steel
Union Made Yellow Label

Optional Construction

~~30 GA & 24 GA Galvanized~~
~~G90 Galvanized~~
~~48" & 24" lengths~~
~~Stainless Steel 304~~
~~Stainless Steel 316~~
~~Aluminum~~
~~PCD~~
~~Galvanneal (Paint Grip)~~
~~Agion (Antimicrobial Coating)~~

Description

Elgen's Snap Lock Pipe is used for low pressure applications.

Standard Construction

Manufactured from 26 GA ASTM A-653 & ASTM A-924 G60 material.
60" length

Packaging

Size (in) A	Length (in)	Bundle Qty	Skid Qty	Weight per Skid (lbs)
3	60	10	640	3,100
4	60	10	640	3,900
5	60	10	300	2,300
6	60	10	300	2,700
7	60	10	200	2,100
8	60	10	200	2,300
9	60	10	160	2,100
10	60	5	80	1,200
12	60	5	80	1,400
14	60	5	45	900
16	60	5	45	1,000

Guarantee

All Elgen products are guaranteed by Elgen Manufacturing against defective material.

Elgen Manufacturing
10 Railroad Ave, Closter NJ 07624
Tel: 800.503.9805 :: Fax: 201.964.9030
info@elgenmfg.com :: www.elgenmfg.com

ALL STATED SPECIFICATION ARE SUBJECT TO CHANGE WITHOUT NOTICE OR OBLIGATION

Date Received: 8/13/2018
Date Reviewed: 8/20/18

Reviewed by: T Morris	**Work Order Number:** 90170-079
Submittal Number: 230713-03	**Contract Number:** CA1435129
Specification Number: 230713	**Project:** Prince Frederick Fire & Life Safety Phase 2
Specification Name: Flexible Duct	**Doc Id:** 24784

The following has been reviewed for general arrangement. Any approval is subject to compliance with all contract requirements. Detailed dimensions and quantities have not been checked.

Comments and Actions

ITEM	DESCRIPTION/COMMENT	ACTION
Flexible Duct	No comments	A

Action Codes:

A– Approved	**AN** – Approved as noted
ANR – Approved as noted; return record copy	**RR** – Revise and resubmit
REJ – Rejected	**RA** – Receipt acknowledged

Submittal Transmittal Cover Sheet

Gen. Contractor; SE Davis Const. Contact: Jeff Holt, PM Address: P.O. Box 1008 La Plata MD, 20646 Phone: O 301-870-2400 email; jeff@sedavisconstruction.com	Arch./Eng. WRA Contact; Kim Triszczuk Address; 138 State Highway Annaplois MD 21401 Phone; 410-474-7257 email; KTriszczuk@sha.state.md.us	Project; SHA - Prince Frederick Life Safety Renovations Address; Rte. 4 south Prince Frederick MD P.O.C. Phone

GC Submittal #	CA1435129-233346
Subcontractor Name	All Weather Mechanical
Subcontractor Submittal #	5
Spec. # Dwg.	23346
Section Title	Duct Insulation

General Contractors stamp/initials	Architects stamp
Engineers Stamp	

Flexible Duct Systems

25’ Insulated
UL 181
Class 1 Air Duct

Atco. Working Together. Doing It Right.

Thermal Performance

Children & Schools GREENGUARD® Indoor Air Quality Certified

UPC #030
R-Value 4.2

UPC #036
R-Value 6.0

UPC #031
R-Value 8.0

All thermal performance (R-Values) are classified by Underwriters Laboratories in accordance with ADC Flexible Duct Performance and Installation Standard using ASTM C-518, at installed wall thickness, on flat insulation only.

Description

ATCO #030, 036, and 031 are UL 181, Class 1 Air Ducts and are manufactured with a tri-directional fiberglass scrim reinforced, metallized polyester outer jacket. The inner core of all three products is air-tight and designed for low-to-medium operating pressures in HVAC systems. ATCO #036 and 031 have increased insulation for superior thermal performance.

Construction

A double lamination of tough polyester which encapsulates a steel wire helix forms the air-tight inner core of the ATCO #030, 036, and 031. The double-layer core of each product is wrapped in multiple thicknesses of fiberglass insulation. All three products are sheathed in a rugged and durable tri-directionally reinforced, metallized polyester jacket.

FEATURES & BENEFITS

Air-tight Inner Core - Energy efficient / No fiberglass erosion into air stream.
Encapsulated Wire Helix - No unraveling when cut to length / Quick installation
Smooth Inner Core - Low friction loss / Low operating cost.
Thick Blanket of Fiberglass Insulation - Energy efficient / Excellent thermal characteristics
Tough Reinforced Metallized Polyester Jacket - Tear and puncture resistant / Low maintenance.
Lightweight Compact Carton - Reduces warehouse and Jobsite handling cost.

APPLICATIONS & CODE COMPLIANCES*

ATCO #030, 036, and 031 are designed for indoor use as a supply and return air duct in residential and commercial low-to-medium pressure heating and air conditioning systems. All three models can be used as a complete air duct system and/or a branch duct connecting to mixing boxes, diffusers, light troffers, room inlets, or other terminal devices. UL 181, NFPA 90A & 90B, IMC, IRC, UMC 10-1 (ICC ES REPORT NO. ESR-1268), HUD, Cities of Chicago, New York, San Francisco, County of Dade (Florida), California State Fire Marshal.*

*ATCO recommends that you check with the local code body having jurisdiction in your area to determine applicable codes.

PRODUCT & PERFORMANCE DATA

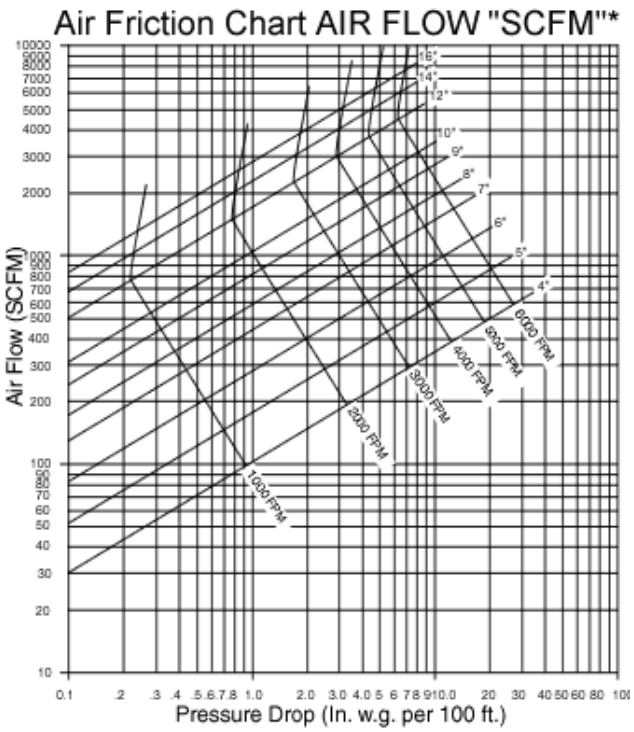

PRODUCT DATA

- Length: 25', 50' (Other lengths available as special order)
- Diameter: 3", 4", 5", 6", 7", 8", 9", 10", 12", 14", 16", 18", 20", 22"
- Vapor Barrier: Tri-directional, scrim reinforced metallized polyester
- End Treatment: 25', 50' -plain ends
- Packaging: 1 piece per carton

INSTALLATION

Air duct connections and joints shall be made per installation instructions outlined by ATCO Rubber Products, Inc. and as required by the UL 181 listing procedure.

(Installation instructions are included inside each carton.)

STRAIGHT RUN

* FD 72-R1 Test Code of the Air Diffusion Council. Friction loss is computed in inches of water gauge per 100 ft. of duct. By using CFM or FPM values for a given duct dimension, the friction loss can be determined. Conversion of CFM to FPM also can be made.

PERFORMANCE DATA

UPC #030 R-Value 4.2	UPC #036 R-Value 6.0	UPC #031 R-Value 8.0

- Rated Positive Pressure: 10" w.g. per UL-181 (UL Listed pressure) ratings are determined in straight lengths @ ambient temperatures.)
- Recommended Operating Pressures: (Determined in a 90° bend at elevated temperatures in accordance with ADC FD 72-R1 Test Code.)

  Maximum Positive:

  6" w.g. - 4" thru 12" Dia.

  4" w.g. - 14" thru 22" Dia.

  (With factory installed metal collars, 2" w.g. - all diameters)

  Maximum Negative:

  1" w.g. - 3"-12" Dia.

  3/4" w.g. - 14" thru 22" Dia.

  Maximum Velocity: 5,000 FPM

- Vapor Transmission: .05 perms
- Maximum Operating Temperatures:

  -20°F to 140°F Continuous (@ maximum pressure)

  -20°F to 180°F Continuous (@ 2" pos. w.g. max.)

  -20°F to 250°F Intermittent (@ 1/2" pos. w.g. max.)
- Flame Spread: 25 max

  Smoke Developed: 50 max

Warranty - ATCO warrants that all flexible ducts will be free from defects in material and workmanship for a period of five years from the date of purchase only if the ducts are installed in accordance with ATCO's installation instructions and under conditions specified in ATCO's performance data. The buyer's exclusive remedies for any defect in the flexible ducts shall be replacement or refund of the purchase price, at ATCO's option. ATCO MAKES NO OTHER WARRANTIES, EXPRESS, IMPLIED, STATUTORY OR OTHERWISE. IN PARTICULAR, ATCO MAKES NO WARRANTY OF MERCHANTABILITY OR FITNESS FOR A PARTICULAR PURPOSE. ATCO SHALL HAVE NO LIABILITY TO THE BUYER OR ANY THIRD PARTY FOR INCIDENTAL OR CONSEQUENTIAL DAMAGES OF ANY KIND WHATSOEVER, INCLUDING, BUT NOT LIMITED TO, PERSONAL INJURY, PROPERTY DAMAGE, LOST PROFITS OR OTHER ECONOMIC INJURY DUE TO ANY DEFECT IN THE FLEXIBLE DUCTS. MATERIALS AND SPECIFICATIONS FOR THE FLEXIBLE DUCTS ARE SUBJECT TO CHANGE WITHOUT NOTICE.

Manufacturing & Shipping Locations

Baltimore, MD • Cartersville, GA • Fort Worth, TX
Greensboro, NC • Houston, TX • Indianapolis, IN • Phoenix, AZ
Plainville, GA • Plant City, FL • Wiggins, MS
Sacramento, CA • Springdale, AR • Vineland, NJ

ATCO RUBBER PRODUCTS, INC.

CORPORATE HEADQUARTERS
7101 ATCO DRIVE
FORT WORTH, TEXAS 76118-7098
PHONE:(817) 595-2894
1-800-USS-DUCT (1-800-877-3828)
FAX: 1-800-366-3539 TELEX: 758-510
www.atcoflex.com

Date Received: 8/13/2018
Date Reviewed: 9/28/2018

Reviewed by: T. Murphy	**Work Order Number:** 90170-079
Submittal Number: 233423-01	**Contract Number:** CA1435129
Specification Number: 233423	**Project:** Prince Frederick Fire & Life Safety Phase 2
Specification Name: HVAC Power Ventilators	**Doc Id:** 24782

The following has been reviewed for general arrangement. Any approval is subject to compliance with all contract requirements. Detailed dimensions and quantities have not been checked.

Comments and Actions

ITEM	DESCRIPTION/COMMENT	ACTION
Exhaust Fan (EF-01) – Product Data	• No exceptions taken	**A**

Action Codes:

A– Approved	**AN** – Approved as noted
ANR – Approved as noted; return record copy	**RR** – Revise and resubmit
REJ – Rejected	**RA** – Receipt acknowledged

Submittal Transmittal Cover Sheet

Gen. Contractor; SE Davis Const. Contact: Jeff Holt, PM Address: P.O. Box 1008 La Plata MD, 20646 Phone: O 301-870-2400 email; jeff@sedavisconstruction.com	Arch./Eng. WRA Contact; Kim Triszczuk Address; 138 State Highway Annaplois MD 21401 Phone; 410-474-7257 email; KTriszczuk@sha.state.md.us	Project; SHA - Prince Frederick Life Safety Renovations Address; Rte. 4 south Prince Frederick MD P.O.C. Phone

GC Submittal #	CA1435129-233423
Subcontractor Name	All Weather Mechanical
Subcontractor Submittal #	3
Spec. # Dwg.	233423
Section Title	Power Ventilator

General Contractors stamp/initials	Architects stamp
Engineers Stamp	

Model: G-098-VG

Direct Drive Centrifugal Roof Exhaust Fan

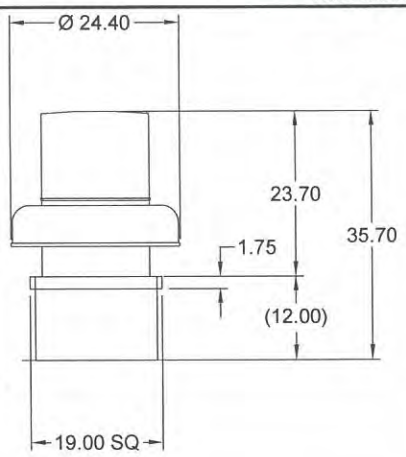

OVERALL HEIGHT MAY BE GREATER DEPENDING ON MOTOR.

Dimensional	
Quantity	1
Weight w/o Acc's (lb)	35
Weight w/ Acc's (lb)	54
Optional Damper (in.)	12 x 12
Roof Opening (in.)	14.5 x 14.5

Performance	
Requested Volume (CFM)	650
Actual Volume (CFM)	650
Total External SP (in. wg)	0.25
Fan RPM	1467
Operating Power (hp)	0.11
Elevation (ft)	150
Airstream Temp.(F)	70
Air Density (lb/ft3)	0.075
Tip Speed (ft/min)	4,297
Static Eff. (%)	23

Motor	
Motor Mounted	Yes
Size (hp)	1/4
Voltage/Cycle/Phase	115/60/1
Enclosure	ODP
Motor RPM	1725
Windings	1

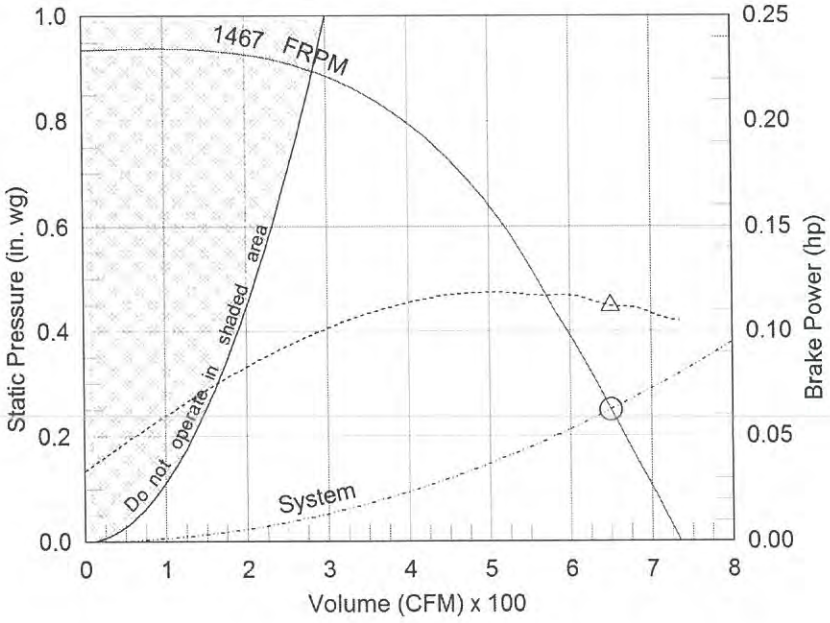

△ Operating Bhp point
○ Operating point at Total External SP
Fan curve
System curve
Brake horsepower curve

Sound Power by Octave Band

Sound Data	62.5	125	250	500	1000	2000	4000	8000	LwA	dBA	Sones
Inlet	78	76	74	66	62	58	51	47	70	58	9.5

Notes:

All dimensions shown are in units of in.
*NEC FLA - based on tables 430.248 or 430.250 of National Electrical Code 2014. Actual motor FLA may vary, for sizing thermal overload, consult factory.
LwA - A weighted sound power level, based on ANSI S1.4
dBA - A weighted sound pressure level, based on 11.5 dB attenuation per Octave band at 5 ft - dBA levels are not licensed by AMCA International
Sones - calculated using AMCA 301 at 5 ft

Model: G-098-VG

Direct Drive Centrifugal Roof Exhaust Fan

Standard Construction Features:

- Aluminum housing - Backward inclined wheel - Aluminum curb cap with prepunched mounting holes - Birdscreen - Ball bearing motors (sizes 85-203 and all Vari Green), sleeve bearing motors (sizes 60-80) - Motor isolated on shock mounts - Corrosion resistant fasteners

Selected Options & Accessories:

Motor - Vari-Green EC motor with Dial or 0-10VDC Input
Control - Dial for balancing
UL/cUL 705 Listed - "Power Ventilators"
Switch, NEMA-1, Toggle, Shipped with Unit
Junction Box Mounted & Wired
Roof Curb-Galv., GPI-19-12-G12, Under Sized 1.5 in. Total, Tray, 1 in. Insulation
Damper Shipped Loose, BD-100-PB-12X12, Gravity Operated, Not Coated
Unit Warranty: 1 Yr (Standard)

Assembly Drawing

Type: Direct Drive Centrifugal Roof Exhaust Fan

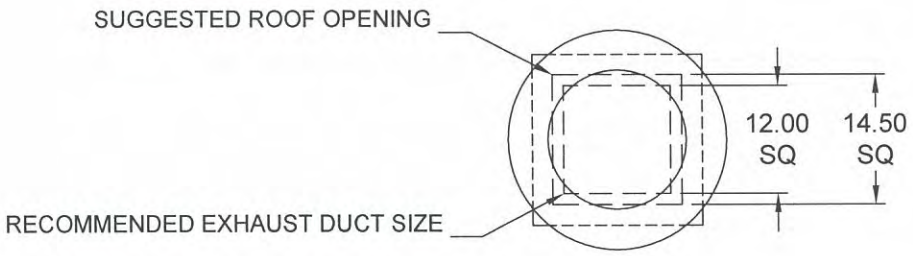

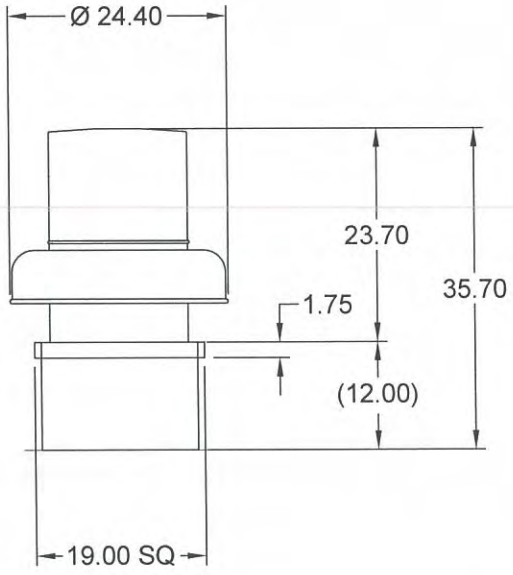

DUCT DIMENSIONS ARE LARGEST POSSIBLE DUCT TO FIT THROUGH CURB.
CONSULT SYSTEM DESIGN ENGINEER FOR RECOMMENDED DUCT SIZE.

OVERALL HEIGHT MAY BE GREATER DEPENDING ON MOTOR.

Notes: All dimensions shown are in units of in..

Vari-Green
Motor & Control Options

An EC motor that uses AC input power and internally converts it to DC power. Potentiometer (dial) mounted on the motor enclosure adjusts the speed (RPM) down 80%. Vari-Green motors feature a soft-start and inherent thermal and current protection built into each unit. Inrush current at start up is eliminated and the motor will automatically reduce speed or turn off if overloaded or it becomes too hot.

Motor Configuration

Input Voltage:	115
Speed Reference:	Dial on Motor
Permanent Dial:	Yes

Control Configuration

Control Type:	N/A
Transformer:	None

Vari-Green

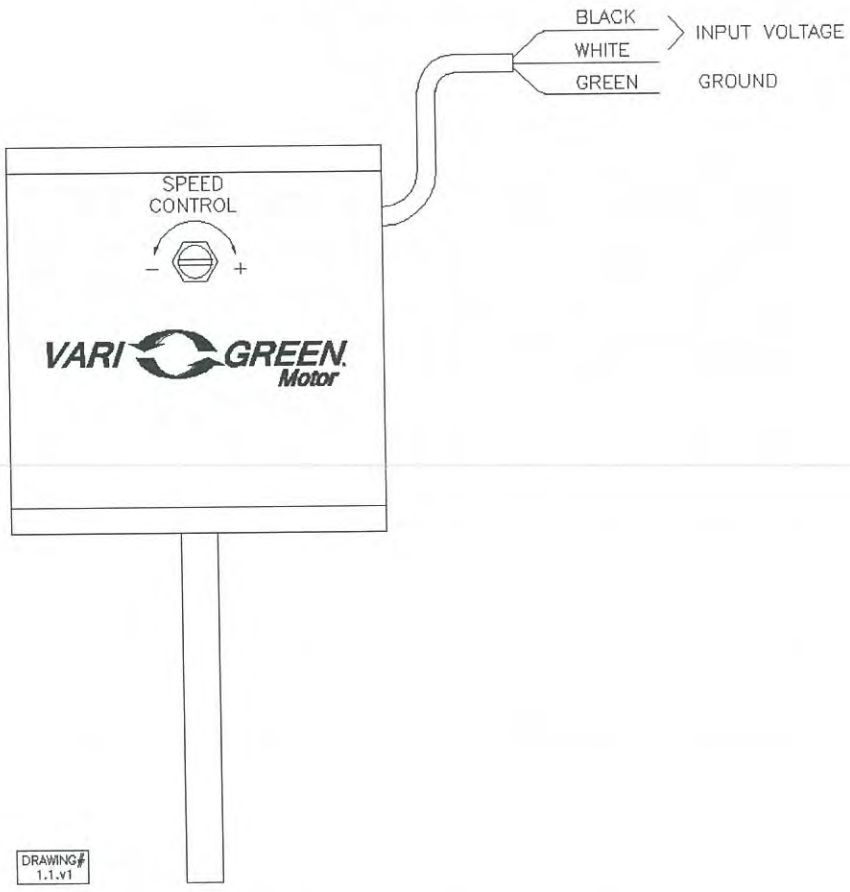

Roof Curb

Model: GPI

Material: Galvanized

Standard Construction Features:

- Roof Curb fits between the building roof and the fan mounted directly to the roof support structure - Constructed of either 18 ga galvanized steel or 0.064 in. aluminum - Straight Sided without a cant - 2 in. mounting flange - 3 lb density insulation - Height - Available from 12 in. to 42 in. as specified in 0.5 in. increments. Notes: - The maximum roof opening dimension should not be greater than the "Actual" top outside dimension minus 2 in.. - The minimum roof opening dimension should be at least 2.5 in. more than the damper dimension or recommended duct size. - The Roof Opening Dimension may or may not be the same as the Structural Opening Dimension. - Damper Tray is optional and must be specified. Tray size is same as damper size. - Security bars are optional and must be specified. Frames and gridwork are all 12 ga steel. Gridwork is welded to the frame and the frame is welded to the curb.

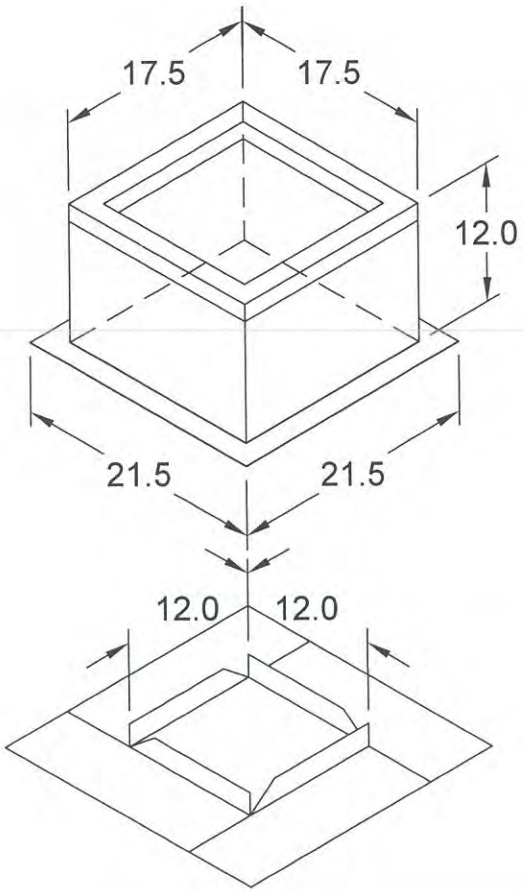

Notes: All dimensions shown are in units of in.

Horizontal Mount Exhaust Damper
Model: BD-100

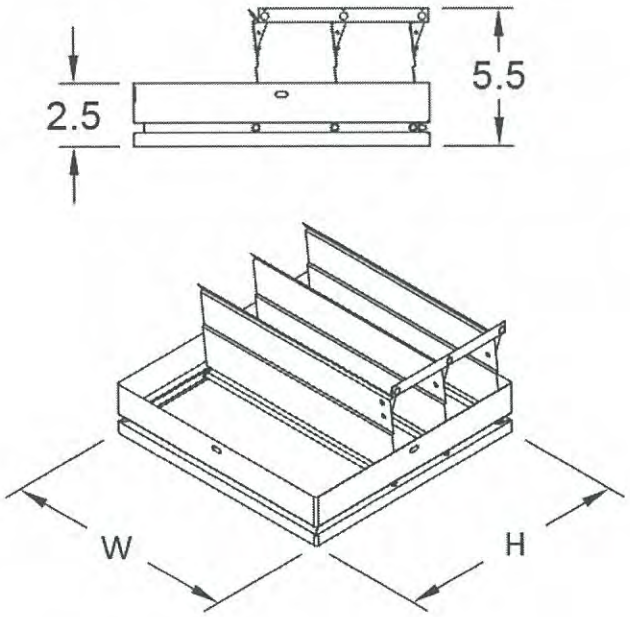

Standard Construction Features:

- Model BD-100 is a horizontal mount exhaust damper (air flow up) and is constructed of 24 ga galvanized steel with pre-punched mounting holes - Damper blades are 0.016 in. roll formed aluminum with vinyl seals on the closing edge, and spring assisted for ease of opening - Axle/bearing is constructed of fiberglass reinforced nylon

Greenheck Fan Corporation certifies that the models BD-100 shown herein is licensed to bear the AMCA Seal. The ratings shown are based on tests and procedures performed in accordance with AMCA Publication 511 and comply with the requirements of the AMCA Certified Ratings Program. The AMCA Certified Ratings Seal applies to Air Leakage and Air Performance Ratings.

Damper Configuration:

ID #:	Tag:	Quantity:	W (in.):	H (in.):	Act Qty:	Actuator Model:
2	G-098-VG	1	12	12	0	

Notes: All dimensions shown are in units of in.
Width And height furnished approximately 0.25 in. undersize

Date Received: 8/9/2018
Date Reviewed: 8/14/18

Reviewed by: T Morris	**Work Order Number:** 90170-079
Submittal Number: 233713.13-01	**Contract Number:** CA1435129
Specification Number: 233713.13	**Project:** Prince Frederick Fire & Life Safety Phase 2
Specification Name: Registers, Grilles & Diffusers	**Doc Id:** 24756

The following has been reviewed for general arrangement. Any approval is subject to compliance with all contract requirements. Detailed dimensions and quantities have not been checked.

Comments and Actions

ITEM	DESCRIPTION/COMMENT	ACTION
SD-1	2 slots, Neck size 8 inch round	AN
RG-1	18X18 inlet size	AN
RG-2	Delete not Used	RA
RG-3	8X8 neck size	AN

Action Codes:

A– Approved	**AN** – Approved as noted
ANR – Approved as noted; return record copy	**RR** – Revise and resubmit
REJ – Rejected	**RA** – Receipt acknowledged

Submittal Transmittal Cover Sheet

Gen. Contractor; SE Davis Const.	Arch./Eng. WRA	Project; SHA - Prince Frederick
Contact: Jeff Holt, PM	Contact; Kim Triszczuk	Life Safety Renovations
Address: P.O. Box 1008	Address; 138 State Highway	Address; Rte. 4 south
La Plata MD, 20646	Annaplois MD 21401	Prince Frederick MD
Phone: O 301-870-2400	Phone; 410-474-7257	P.O.C.
email; jeff@sedavisconstruction.com	email; KTriszczuk@sha.state.md.us	Phone

GC Submittal #	CA1435129-233713
Subcontractor Name	All Weather Mechanical
Subcontractor Submittal #	6
Spec. # Dwg.	233713.13
Section Title	Register Grilles & Diffusers

General Contractors stamp/initials	Architects stamp
Engineers Stamp	

Plaque Face Ceiling Diffusers
Steel • Louvered • Plaque Face
Model: DAT • 24 x 24 • Round Neck

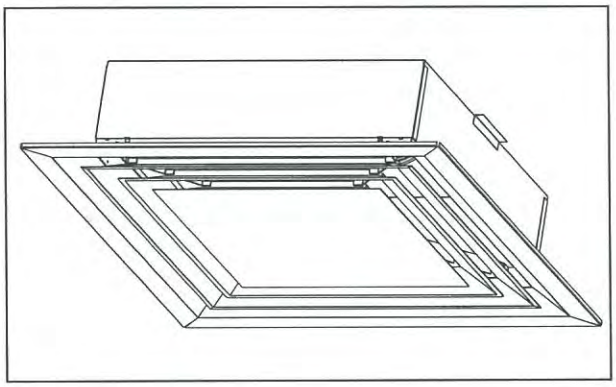

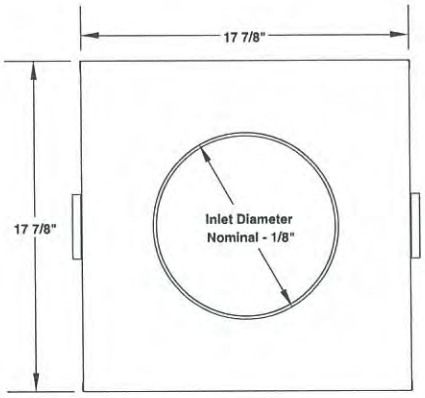

Border Type 3 (Lay-In)

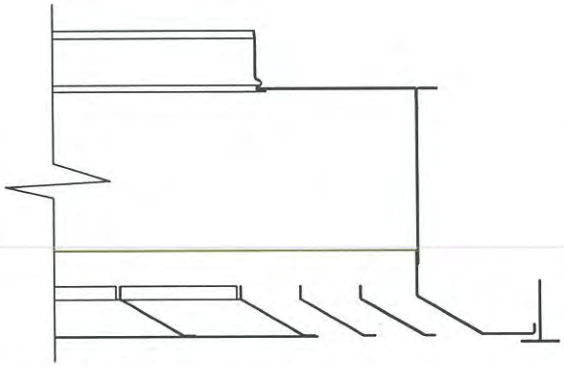

Inlet Size
Check ☐ selection

- ☐ 6" Nominal Diameter
- ☐ 8" Nominal Diameter
- ☐ 10" Nominal Diameter
- ☐ 12" Nominal Diameter
- ☐ 14" Nominal Diameter

All dimensions are in inches.

Number of Slots
Check ☒ selection

☐ 1 Slot

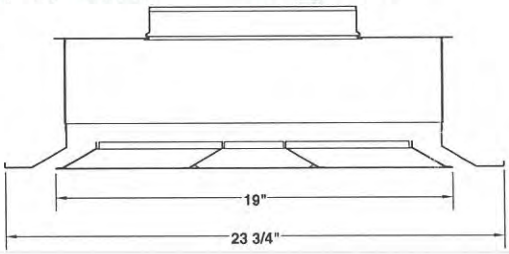

☐ 2 Slot

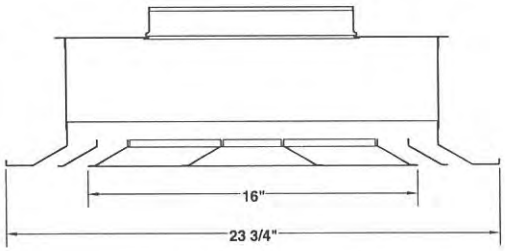

☐ 3 Slot

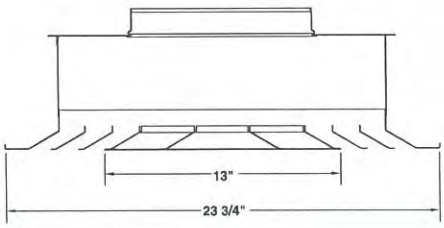

Standard Finish: #26 White

General Description

- TITUS DAT diffuser is designed to be architecturally pleasing while providing superior performance.
- The DAT maintains an unbroken horizontal flow pattern from maximum cfm down to minimum.
- Core is removable from the face of the diffuser.
- Material is heavy gauge steel.

D-36.0-S

Louvered Return Grilles • Steel

Models: ☐ **350RL** • **35° Deflection** • **Long Blades** • **¾" Blades Spacing**
☐ **350RS** • **35° Deflection** • **Short Blades** • **¾" Blades Spacing**

☐ Border Type 1 (Surface Mount)

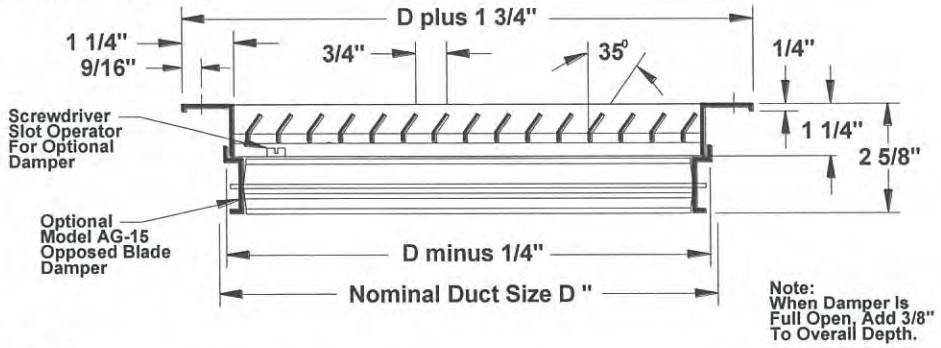

Available Sizes (D" x D")

Border Type 1 is available in sizes 6" x 4" through 48" x 48" in 1" increments in one piece construction. Odd and fractional sizes are available at additional cost. Sizes larger than 48" x 48" are shipped in multiple sections with joining strips for field assembly.

Note: Wall or duct opening should be duct size ± 1/8". All dimensions are in inches.

Fastenings

☐ Type A • External Screw ☐ Type C • Concealed Screw

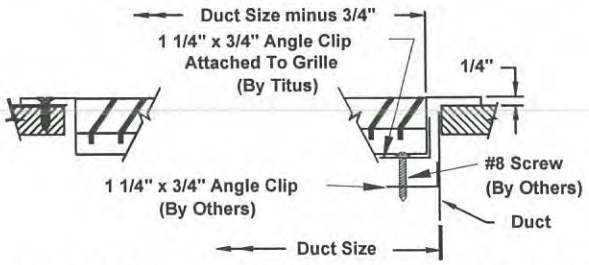

Available with Border Type 1 only. Type C fastening available with damper.

Mounting Frames

☐ PF • Steel Plaster Frame ☐ PFA • Aluminum Plaster Frame

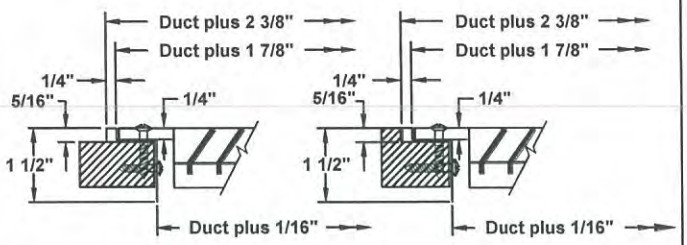

Surface Mounted Example **Recessed Mounted Example**

Note: Wall opening should be listed duct size + 1/8" to listed duct size + 1/4".

Accessories (Optional) Check ☑ if provided.

☐ Neck mounted opposed blade damper (galvanized steel)

☐ EQT • Earthquake Tabs

☐ IS • Insect Screen (1/16" square mesh – galvanized steel)

☐ DS • Debris Screen (¼" square mesh – galvanized steel)

☐ Other: _____

Standard Finish: #26 White

☐ Other Finish: _____

General Description

- Material is Steel.
- Available with louvers vertical or horizontal.
- #8 x 11/4" lg. Phillips flat head sheet metal screws painted white.
- Optional opposed blade damper has screwdriver adjustment accessible through face of grille.
- All dimensions are ± 1/16".

This submittal is meant to demonstrate general dimensions of this product. The drawings are not meant to detail every aspect of the product. Drawings are not to scale. Titus reserves the right to make changes without written notice.

All rights reserved. No part of this work may be reproduced or transmitted in any form or by any means, electronic or mechanical, including photocopying and recording, or by any information storage retrieval system without permission in writing from Air Distribution Technologies.

Optional Border Types Available

☐ Border Type 2 (Snap-in)
Panel Mounted

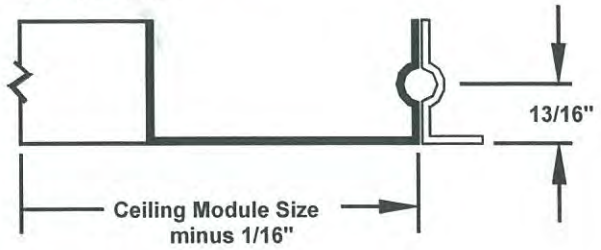

Available in 24" x 24" modules with neck sizes up to 20" x 20".

☐ Border Type 3 (Lay-in)
Panel Mounted

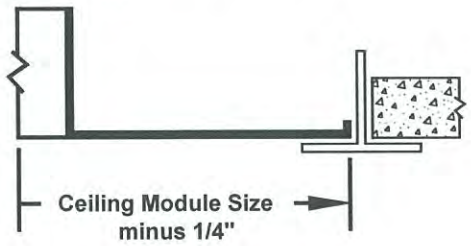

Available in all standard module sizes with neck sizes up to module size minus 2".

☐ Border Type 4 (Spline)
Panel Mounted

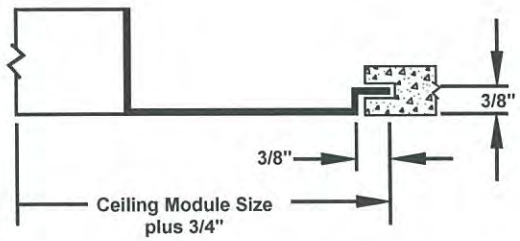

Available in 24" x 24" modules with neck sizes up to 20" x 20".
Splines on 2 opposite sides only

☐ Border Type NT (Narrow Tee)

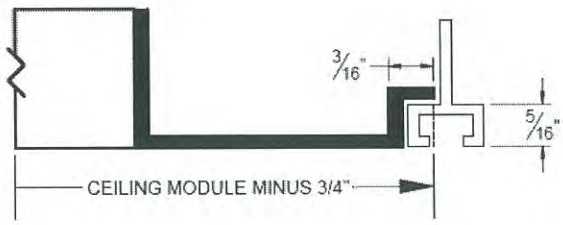

NT Border is available in module sizes 24" x 12" & 24" x 24" only.

Border Type 2, 3, 4, NT

- Accessories & Options

Check ☑ if provided.

☐ AG-15 • Neck mounted opposed blade damper (galvanized steel)

☐ IS • Insect Screen (1/16" square mesh – galvanized steel)

☐ DS • Debris Screen (1/4" square mesh – galvanized steel)

☐ EQT • Earthquake tabs

☐ Other: _____

Standard Finish: #26 White

☐ Optional finish: _____

This submittal is meant to demonstrate general dimensions of this product. The drawings are not meant to detail every aspect of the product. Drawings are not to scale. Titus reserves the right to make changes without written notice.

All rights reserved. No part of this work may be reproduced or transmitted in any form or by any means, electronic or mechanical, including photocopying and recording, or by any information storage retrieval system without permission in writing from Air Distribution Technologies.

PAR • Return

Perforated Ceiling Diffusers
Steel • Flush Face

☐ Border Type 3 (Lay-In when D=Module size -2)

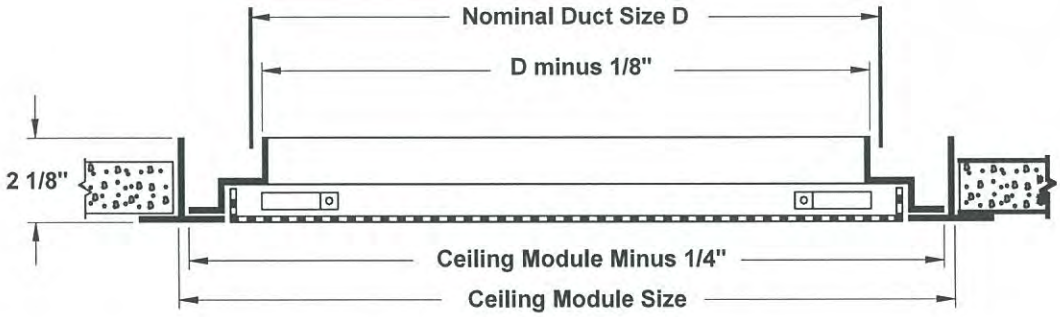

☐ Border Type 3 (Lay-In for other duct sizes shown)

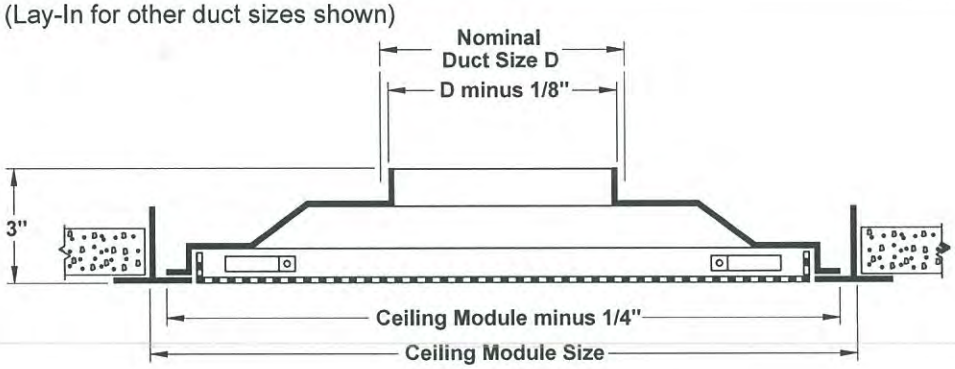

☐ Border Type 1 (Surface Mount)

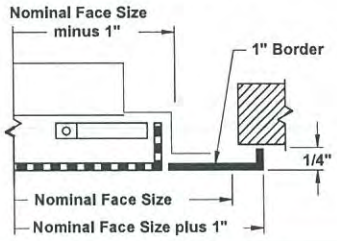

☐ Border Type 2 (Snap-In)

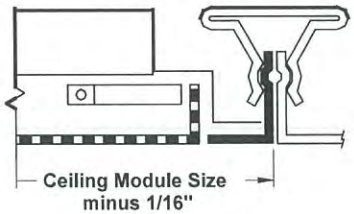

☐ Border Type 4 (Spline)

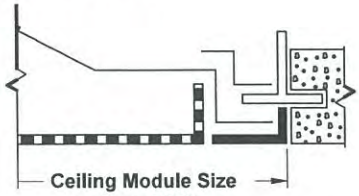

☐ Border Type 4SL (Spline Side Lock)

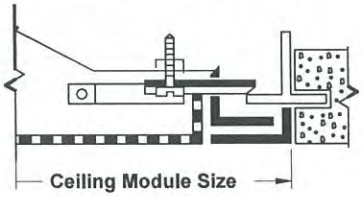

Note: 4SL can be installed after ceiling tiles are in place.

Available Sizes for Border Types 1, 2, 3, 4, 4SL																	
Face or Ceiling Module Size	Nominal Duct Size D																
	6 x 6	8 x 8	10 x 10	12 x 12	14 x 14	15 x 15	18 x 6	18 x 18	22 x 10	22 x 22	46 x 22	6" Dia.	8" Dia.	10" Dia.	12" Dia.	14" Dia.	16" Dia.
12 x 12	•		•									•					
24 x 12	•						•		•			•					
16 x 16	•	•			•							•	•	•			
20 x 20	•	•	•					•				•	•	•	•	•	
24 x 24	•	•	•	•		•		•		•		•	•	•	•	•	•
48 x 24	•	•	•	•		•					•	•	•	•	•	•	•

• Indicates available combination.

Removing Perforated Face

1. Insert small Screwdriver or other slim instrument to push latch inward from border.

2. Repeat on opposite side.

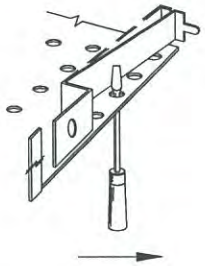

3. Face will now swing down with 2 remaining latches acting as hinges.

For complete removal, release 2 remaining latches at left.

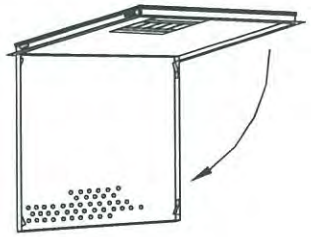

Accessories (Optional) Check ☑ if provided.

☐ Model AG-95 Opposed Blade Damper

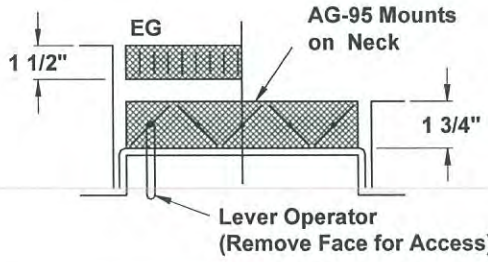

☐ Model AG-35B Opposed Blade Damper

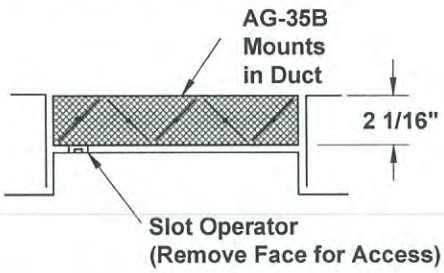

☐ TRM TITUS Rapid Mount Frame

For Surface Mounting Border Type 3

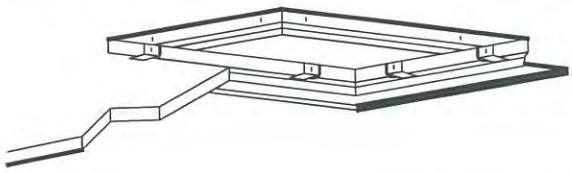

☐ IB Molded Insulation Blanket

Insulation is R-6 where blanket has the most depth. One-inch clearance on each side of neck is left for insulated duct connection. 24 x 24-inch module size only. Blanket is factory installed.

Standard Finish: #26 White

General Description

- Model PAR flush face perforated ceiling diffusers are designed for use as returns to match the Model PAS supply diffusers.
- Can be mounted in a plenum or connected to a return duct.
- Optional damper is easily adjusted by dropping the perforated face (see page 2).
- Perforated face has 3/16" diameter holes on ¼" staggered centers.
- Material is heavy gauge steel.

This submittal is meant to demonstrate general dimensions of this product. The drawings are not meant to detail every aspect of the product. Drawings are not to scale. Titus reserves the right to make changes without written notice.

Titus®
605 Shiloh Road • Plano, Texas 75074• 972-212-4800

All rights reserved. No part of this work may be reproduced or transmitted in any form or by any means, electronic or mechanical including photocopying and recording, or by any information storage retrieval system without permission in writing from Air Distribution Technologies

Louvered Return Grilles and Registers • Aero-Blade Series • Aluminum

Models: ☐ **3FL** • 45° Deflection • Long Blades • 3/4" Blade Spacing
☐ **3FS** • 45° Deflection • Short Blades • 3/4" Blade Spacing

☐ **Border Type 1 • Surface Mount**

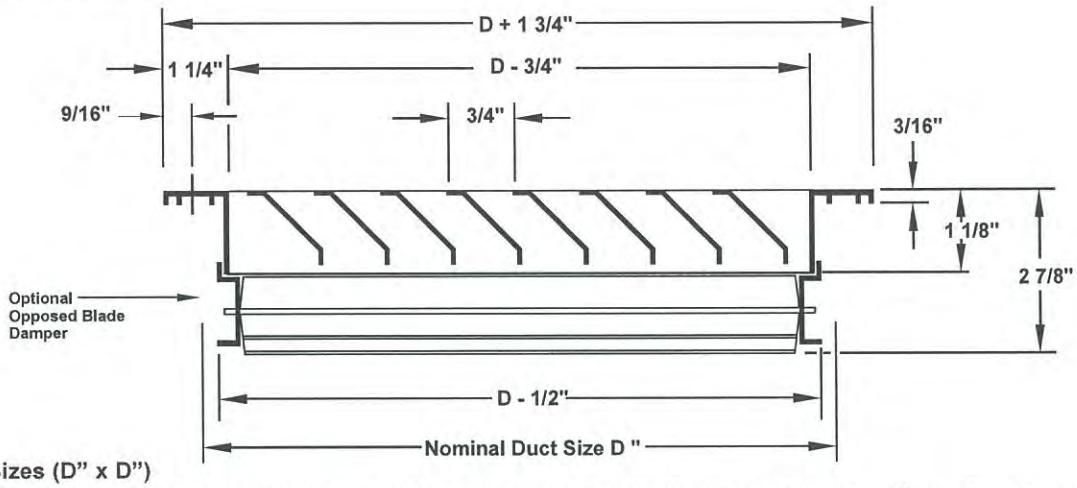

Available Sizes (D" x D")

Border Type 1 is available in sizes 6" x 4" through 48" x 48" in one piece construction. Sizes larger than 48" x 48" are shipped in multiple sections with joining strips for field assembly. Odd and fractional sizes are available at additional cost.

Note: Dimensions are in inches. Wall or duct opening should be duct size ± 1/8."

Fastenings

☐ **Type A • External Screw** ☐ **Type C • Concealed Screw**

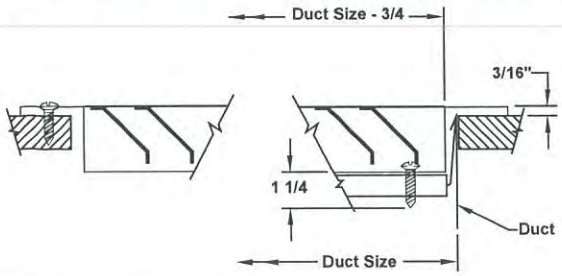

Available with Border Type 1 only.

Mounting Frames

☐ **PFAP • Aluminum Plaster Frame**

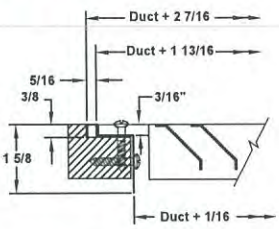

Recessed Mounted Example

Note: Wall opening should be listed duct size + 1/8" to listed duct size + 1/4".
Model PFAP Plaster Frame can be installed as either surface mount or recessed.

Accessories (Optional)

Check ☐ if provided

- ☐ Opposed blade damper (galvanized steel)
- ☐ EQT • Earthquake Tabs
- ☐ IS • Insect Screen (1/16" square mesh – galvanized steel)
- ☐ DS • Debris Screen (1/4" square mesh – galvanized steel)
- ☐ Other: _____

Standard Finish: #26 White

☐ Other Finish: _____

General Description

- One set of 45° fixed blades.
- Optional opposed blade damper has slide adjustment accessible at face of register.
- Material is heavy extruded aluminum for blades and border.
- #8 x 1 1/4" lg. Phillip's flat head sheet metal screws painted white.
- All dimensions are ± 1/16".

Titus®

Note: This submittal is meant to demonstrate general dimensions of this product. The drawings on this submittal are not meant to detail every aspect of the product with exactness. Drawings are not to scale. TITUS reserves the right to make changes without written notice.

ABG-16.0-S

605 Shiloh Road • Plano, Texas 75074 • 972-212-4800

All rights reserved. No part of this work may be reproduced or transmitted in any form or any means, electronic or mechanical, including photocopying and recording, or by any information storage retrieval system without permission in writing from Air Distribution Technologies.

(Please see reverse side for other border types.)

Optional Border Types Available

☐ **Border Type 2 (Snap-in) Panel Mounted**

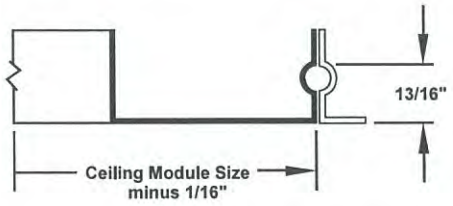

Available in 24" x 24" modules with neck sizes up to 20" x 20".

☐ **Border Type 3 (Lay-in) Panel Mounted**

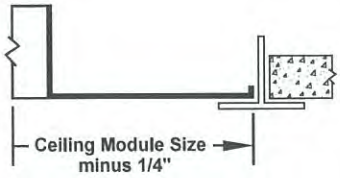

Available in all standard module sizes with neck sizes up to module size minus 2".

☐ **Border Type 4 (Spline) Panel Mounted**

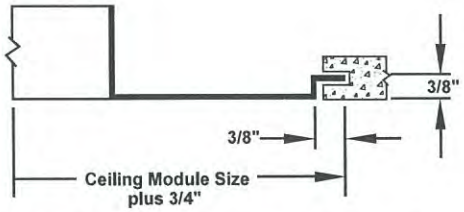

Available in 24" x 24" modules with neck sizes up to 20" x 20".
Splines on 2 opposite sides only

☐ **Border Type 7 (Channel)**

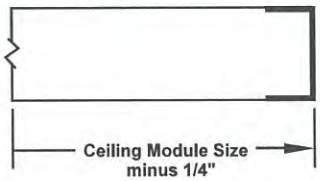

Available in sizes up to 48" x 48".

Border Type 2, 3, 4

• Accessories & Options

Check ☐ if provided

- ☐ Neck mounted opposed blade damper (galvanized steel)
- ☐ IS • Insect Screen (1/16" square mesh – galvanized steel)
- ☐ DS • Debris Screen (1/4" square mesh – galvanized steel)
- ☐ EQT • Earthquake tabs
- ☐ Other _____

Standard Finish: #26 White

☐ Optional finish _____

Border Type 7

• Accessories & Options

Check ☐ if provided

- ☐ EQT • Earthquake tabs
- ☐ Other _____

Standard Finish: #26 White

☐ Optional finish _____

All rights reserved. No part of this work may be reproduced or transmitted in any form or any means, electronic or mechanical, including photocopying and recording, or by any information storage retrieval system without permission in writing from Air Distribution Technologies.

Date Received: 8/10/2018
Date Reviewed: 8/13/18

Reviewed by: T Morris
Submittal Number: 015500-01 (238126-01)
Specification Number: 015500 (238126)
Specification Name: Heat Pump

Work Order Number: 90170-079
Contract Number: CA1435129
Project: Prince Frederick Fire & Life Safety Phase 2
Doc Id: 24759

The following has been reviewed for general arrangement. Any approval is subject to compliance with all contract requirements. Detailed dimensions and quantities have not been checked.

Comments and Actions

ITEM	DESCRIPTION/COMMENT	ACTION
Ductless Split Heat Pump	No comments	A

Action Codes:

A– Approved	**AN** – Approved as noted
ANR – Approved as noted; return record copy	**RR** – Revise and resubmit
REJ – Rejected	**RA** – Receipt acknowledged

Submittal Transmittal Cover Sheet

Gen. Contractor; SE Davis Const. Contact: Jeff Holt, PM Address: P.O. Box 1008 La Plata MD, 20646 Phone: O 301-870-2400 email; jeff@sedavisconstruction.com	Arch./Eng. WRA Contact; Kim Triszczuk Address; 138 State Highway Annaplois MD 21401 Phone; 410-474-7257 email; KTriszczuk@sha.state.md.us	Project; SHA - Prince Frederick Life Safety Renovations Address; Rte. 4 south Prince Frederick MD P.O.C. Phone

GC Submittal #	CA1435129-015500.01 R1
Subcontractor Name	All Weather Mechanical
Subcontractor Submittal #	1
Spec. # Dwg.	15500 (238126)
Section Title	Mechanical
	Daikin Ductless Split Heat Pump
	Previously HVAC Contractor selected, Protech, is unable to to fulfill this contract.
	All weather Mechanical has been selected. We submit their submittal on a
	Daikin model as specified for your review and approval.

General Contractors stamp/initials	Architects stamp
Engineers Stamp	

HAVTECH
INNOVATIVE SOLUTIONS. EXCEPTIONAL SERVICE.

(301) 206-9225 WASHINGTON
(301) 497-9610 FAX
(410) 724-3703 BALTIMORE
(410) 724-5999 FAX
9505 BERGER ROAD COLUMBIA, MD 21046

SUBMITTAL

TO:	All Weather Mechanical LLC	**PROJECT:**	SHA Ph II Prince Frederick Facility
		ENGINEER:	Whitman Requardt
		SPECIFICATION:	Daikin DSS
		DATE:	8-2-18

We are pleased to submit the following equipment on the above project:

DUCTLESS SPLIT SYSTEM COOLING / HEAT PUMP UNITS

Daikin **Model FTXS-L /RXS-L** Ductless Split System Cooling / Heat Pump Unit
Quantity: **1**
Tag: **AC/ACCU-1**

Indoor Unit Wall Mounted
- Insulated casing
- Multi-speed motor with thermal overload protection
- Copper tube, aluminum fin evaporator coil
- Standard filter
- Wall mounted thermostat
- Condensate pump / Overflow sensor: **Shipped loose to be field installed**

Outdoor Unit
- Galvanized steel cabinet with powder coated paint
- Inverter-driven scroll compressor with overload protection
- Copper tube, aluminum fin condenser coil and check valve assembly
- Low Ambient wind baffle: **Shipped loose to be field installed**

NOT INCLUDED:
- Refrigerant Piping, R410A Operating Charge and Specialties
- External Mounting Kits
- Disconnect Switches
- Housekeeping Pads / Equipment Supports
- Hauling Rigging and Setting of Equipment
- Equipment Start Up and Warranty Service

Submitted by,
Thor Fraser
HAVTECH

Job Name:	
Tag#	

Submittal Data Sheet

FTXS12LVJU / RXS12LVJU

1-Ton Wall Mounted Heat Pump System

Complete warranty details available from your local dealer or at www.daikincomfort.com. To receive the 12-Year Parts Limited Warranty, online registration must be completed within 60 days of installation. Online registration is not required in California or Quebec. *If product is installed in a commercial application, limited warranty period is 5 years.*

Indoor Specifications

	Cooling		Heating	
Airflow Rate (cfm)	H	M	H	M
	403	307	438	335
	L	SL	L	SL
	205	155	240	212
Sound (dBA) H / M / L / SL	45 / 37 / 29 / 23		45 / 39 / 29 / 26	
Dimensions (H × W × D) (in)	11-5/8 × 31-1/2 × 8-7/16			
Weight (Lbs)	22			

Outdoor Specifications

Compressor	Hermetically Sealed Swing Type			
Refrigerant	R-410A			
Factory Charge (Lbs)	2.65			
Refrigerant Oil	PVE (FVC50K)			
Airflow Rate (cfm)	Cooling		Heating	
	H	1,183	H	992
	L	989	L	840
Sound Pressure Level (dBA)	49			
Dimensions (H × W × D) (in)	21-5/8 × 30-1/8 × 11-1/4			
Weight (Lbs)	75			

Efficiency

Cooling		Heating	
SEER	23	HSPF	12.5
EER	12.8	COP	4.35

Performance

Cooling (Btu/hr)	
Rated (Min/Max)	12,000 (4,800 / 12,000)
Sensible @ AHRI	9,250
Moisture Removal gal/h	.5
Standard Operating Range	50°F – 115°F
Extended Operating Range*	0°F – 115°F

Rated Cooling Conditions: Indoor: 80°F DB/67°F WB
Outdoor: 95°F DB/75°F WB

***With field settings and wind baffle**

Heating (Btu/hr)	
1:@ 47° Rated (Min/Max)	14,400 (4,400 / 14,400)
2: @ 17° Rated	9,200
3: @ 5° Max	6,430
Operating Range	5°F – 65°F

1: Rated Heating Conditions: Indoor: 70°F DB/60°F WB
Outdoor: 47°F DB/43°F WB

2: Rated Heating Conditions: Indoor: 70°F DB/60°F WB
Outdoor: 17°F DB/15°F WB

3: Heating Conditions: Indoor: 70°F DB/60°F WB
Outdoor: 5°F DB/5°F WB

Electrical

	208/60/1	230/60/1
System MCA	8.75	8.75
System MFA	15	15
Compressor RLA	4.4	3.9
Outdoor fan motor FLA	.22	.22
Outdoor fan motor W	23	23
Indoor fan motor FLA	.15	.15
Indoor fan motor W	23	23

MFA: Max. fuse amps **MCA**: Min. circuit amps (A) **FLA**: Full load amps (A)
RLA: Rated load amps (A) **W**: Fan motor rated output (W)

Piping

Liquid (in)	1/4
Gas (in)	3/8
Drain (in)	5/8
Max. Interunit Piping Length (ft)	65.6
Max. Interunit Height Difference (ft)	49.2
Chargeless (ft)	32.8
Additional Charge of Refrigerant (oz/ft)	.21

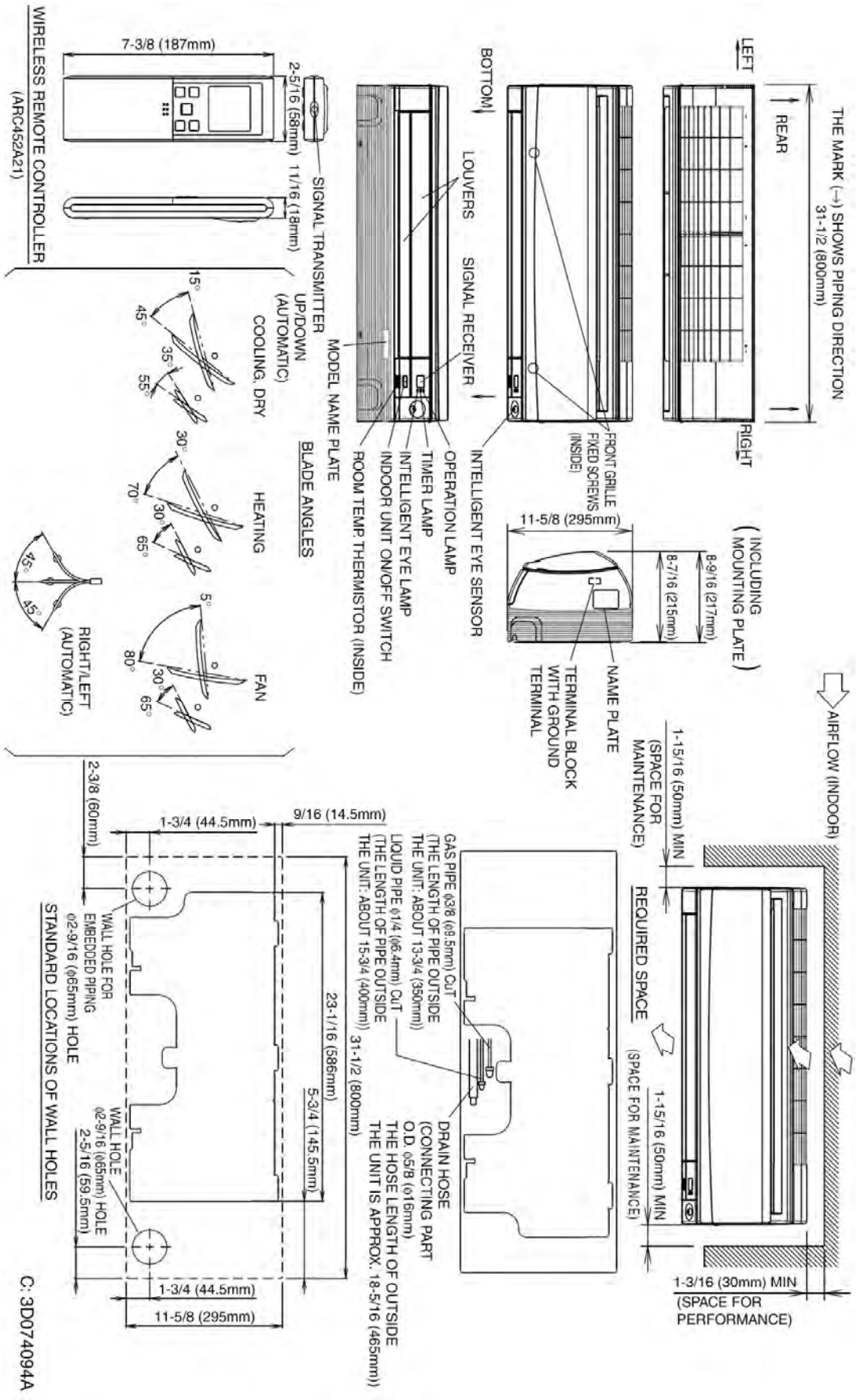
THE MARK (→) SHOWS PIPING DIRECTION
31-1/2 (800mm)
LEFT
REAR
RIGHT
BOTTOM
LOUVERS
SIGNAL RECEIVER
FRONT GRILLE
FIXED SCREWS (INSIDE)
INTELLIGENT EYE SENSOR
OPERATION LAMP
TIMER LAMP
INTELLIGENT EYE LAMP
INDOOR UNIT ON/OFF SWITCH
ROOM TEMP. THERMISTOR (INSIDE)
11-5/8 (295mm)
8-9/16 (217mm)
8-7/16 (215mm)
(INCLUDING MOUNTING PLATE)
TERMINAL BLOCK WITH GROUND TERMINAL
NAME PLATE
AIRFLOW (INDOOR)
1-15/16 (50mm) MIN
(SPACE FOR MAINTENANCE)
REQUIRED SPACE
1-15/16 (50mm) MIN
(SPACE FOR MAINTENANCE)
1-3/16 (30mm) MIN
(SPACE FOR PERFORMANCE)
WIRELESS REMOTE CONTROLLER
(ARC452A21)
7-3/8 (187mm)
2-5/16 (58mm)
11/16 (18mm)
SIGNAL TRANSMITTER
MODEL NAME PLATE
BLADE ANGLES
UP/DOWN (AUTOMATIC)
COOLING, DRY
HEATING
FAN
RIGHT/LEFT (AUTOMATIC)
15°
45°
35°
55°
30°
70°
30°
65°
45°
45°
5°
80°
30°
65°
2-3/8 (60mm)
1-3/4 (44.5mm)
9/16 (14.5mm)
GAS PIPE ø3/8 (ø8.5mm) CuT
(THE LENGTH OF PIPE OUTSIDE THE UNIT: ABOUT 13-3/4 (350mm))
LIQUID PIPE ø1/4 (ø6.4mm) CuT
(THE LENGTH OF PIPE OUTSIDE THE UNIT: ABOUT 15-3/4 (400mm))
31-1/2 (800mm)
DRAIN HOSE
(CONNECTING PART O.D. ø5/8 (ø16mm)
THE HOSE LENGTH OF OUTSIDE THE UNIT IS APPROX. 18-5/16 (465mm))
23-1/16 (586mm)
5-3/4 (145.5mm)
WALL HOLE FOR EMBEDDED PIPING ø2-9/16 (ø65mm) HOLE
WALL HOLE ø2-9/16 (ø65mm) HOLE
2-5/16 (59.5mm)
1-3/4 (44.5mm)
11-5/8 (295mm)
STANDARD LOCATIONS OF WALL HOLES
C: 3D074094A

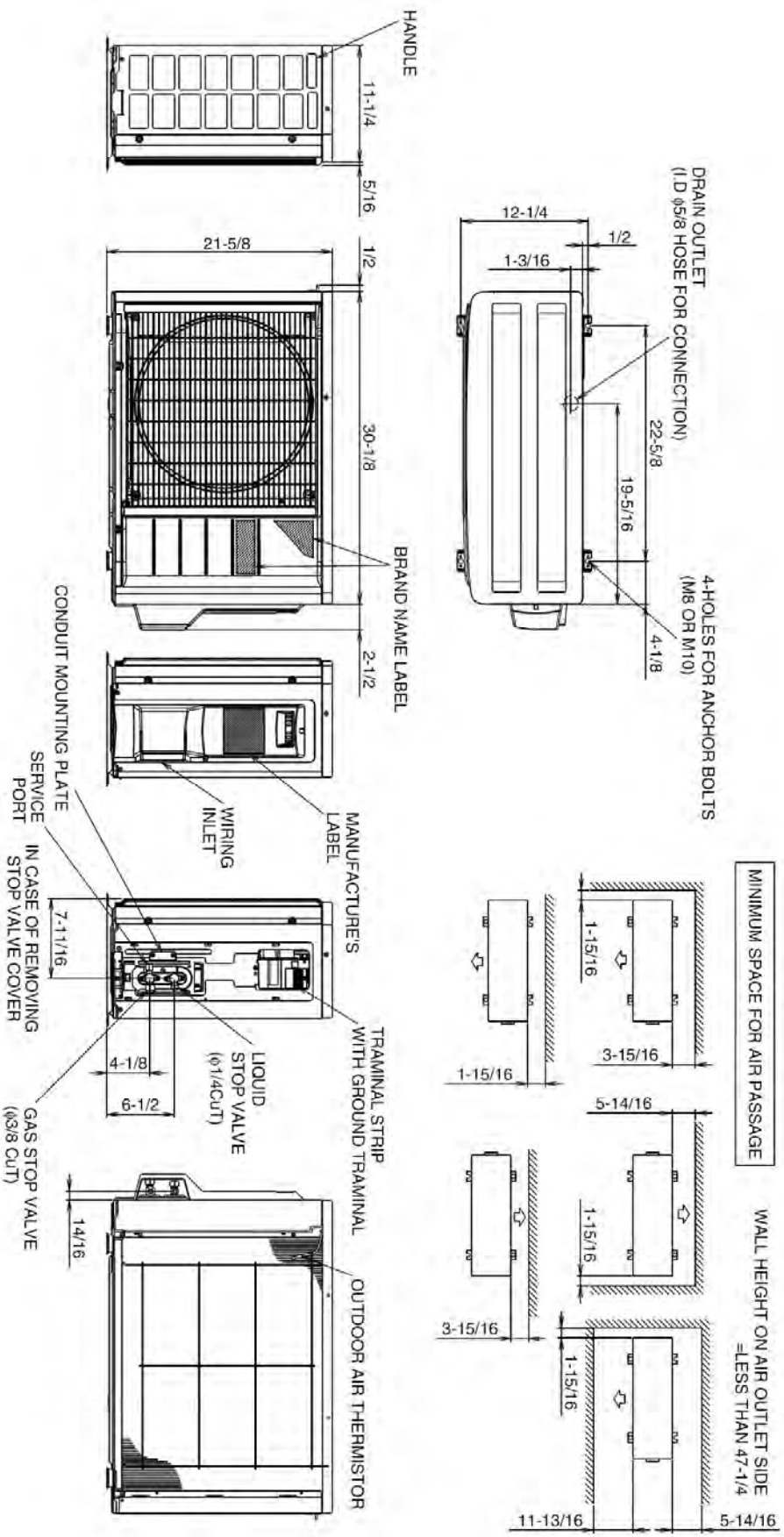
HANDLE
11-1/4
5/16
21-5/8
1/2
30-1/8
BRAND NAME LABEL
2-1/2
CONDUIT MOUNTING PLATE
SERVICE PORT
IN CASE OF REMOVING STOP VALVE COVER
WIRING INLET
MANUFACTURE'S LABEL
7-11/16
4-1/8
6-1/2
LIQUID STOP VALVE (φ1/4CUT)
GAS STOP VALVE (φ3/8 CUT)
TRAMINAL STRIP WITH GROUND TRAMINAL
14/16
OUTDOOR AIR THERMISTOR
DRAIN OUTLET (I.D φ5/8 HOSE FOR CONNECTION)
12-1/4
1/2
1-3/16
22-5/8
19-5/16
4-1/8
4-HOLES FOR ANCHOR BOLTS (M8 OR M10)
MINIMUM SPACE FOR AIR PASSAGE
1-15/16
3-15/16
1-15/16
5-14/16
1-15/16
3-15/16
1-15/16
11-13/16
5-14/16
WALL HEIGHT ON AIR OUTLET SIDE =LESS THAN 47-1/4

Optional Accessories

Indoor Unit		
Included	**Part Number**	**Description**
	BRP072A43	Wireless Interface Adapter
	BRC944B2-A08	Wired Remote Controller
	BRCW901A03	Wired Remote Controller Cable – 10ft
	BRCW901A08	Remote Controller Cable – 25ft
	DACA-TS1-1	Daikin ENVi Intelligent Thermostat Kit
	DACA-CP1-1	Inline Condensate Pump (Fits inside all Daikin wall & floor mount units)
	DACA-CP4-1	External Condensate Pump
	KRP928BB2S	Interface Adaptor for DIII-NET

Description		
Included	**Part Number**	**Description**
	DACA-WB-3	Powder-Coated Wall-Mounted Bracket
	KEH041A41	Drain Pan Heater RXS09_12LV
	KKP937A4	Drain Plug for OD Unit
	KPW937C4	Low Ambient Wind Baffle / Air Adjustment Grille (09/12 MBH)

Submittal Data: BRC944B2
RA & RA-Multi Wired Controller

Job Name:	Location:
Purchaser:	
Engineer:	
Submitted To:	For: ☐ Reference ☐ Approval ☐ Construction
Submitted By:	Date:
Unit Designation: Schedule #:	Model No.:

For use with the following Daikin RA & RA-Multi Indoor Models: FDXS Slim Duct & CTXS / FTXS Wall Mount
For use with the following Daikin RA & RA-Multi Outdoor Models: RX Std. Efficiency, RXS High Efficiency, 2MXS & 4MXS

FEATURES / BENEFITS

- Includes 8m (26ft) of cable
- Built in one time or daily timer functionality with up to 2 timer actions per day
- LCD lets you display set point temperature in either °F or °C units in 1 degree increments
- Monitors room temperature and preset temperature by microcomputer and can select cool or heat operation modes automatically based on the set-point requirement
- Selectable auto / cool / heat / dry operation modes with adjustable temperature and airflow rates
- Approximately two hour battery backup
- Required remote control adapter PCB included
- Controller can be used in conjunction with the factory supplied standard wireless remote controller

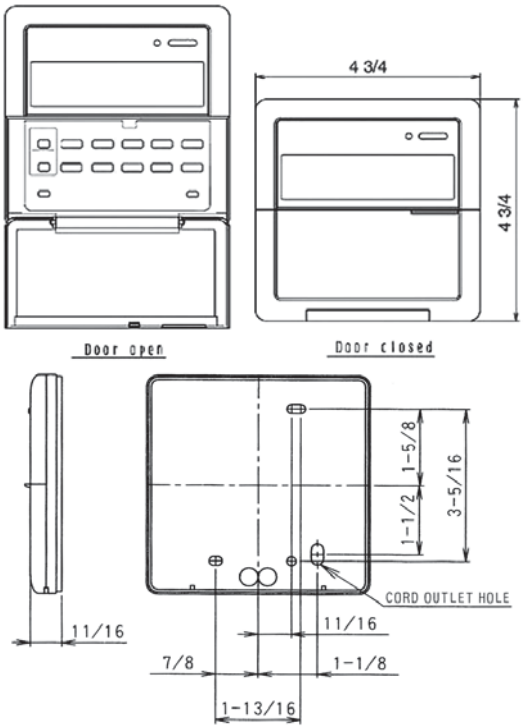

Remote Controller Functions	
OPERATION	Start / Stop
	Operation Mode
	Temperature Setting
	64°F – 90°F Set Point Range
	Fan Speed
	Airflow Direction
MONITORING	Status
	Operation Mode
	Temperature Setting
	Fan Speed
	Airflow Direction
SCHEDULING	One Time Timer
	Daily Timer

CABLE SPECIFICATIONS	
TYPE	4-wire sheathed vinyl cable
TOTAL LENGTH	BRCW901A08 – Approx. 8m (26ft)

sauermann®

Si-30

mini condensate removal pump

Sauermann Si inside

N006_00 édition 14/40

www.sauermannpumps.us

Manufactured to DAIKIN specification

- Engineered in partnership
- Best-in-class reliability, manufactured specifically for condensate removal
- Patented 5 gph pump technology
- Specific wiring schematic for Daikin models (see reverse page)
- Complete with Drain Safe Device

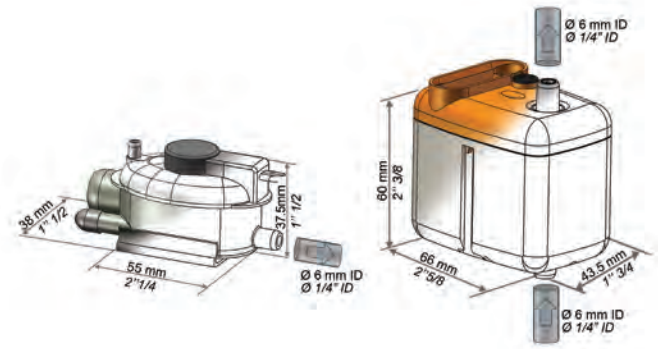

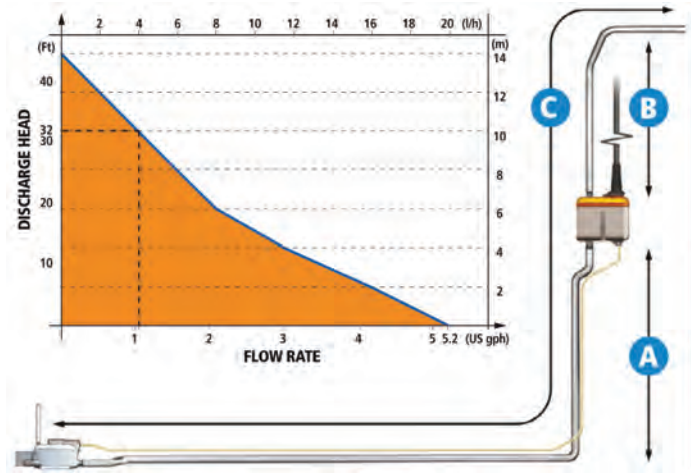

A Suction head	B Discharge head	C Total tube length using 1/4" (6mm) hose: 15 ft (4.5m)	30 ft (9m)	60 ft (18m)	100 ft (30m)
0 ft (0m)	0 ft (0m)	5.0	4.7	4.5	4.2
	6 ft (2m)	4.2	3.9	3.7	3.5
	13 ft (4m)	3	2.9	2.8	2.6
	20 ft (6m)		2.5	2	1.7
	26 ft (8m)		1.6	1.3	1.1
	33 ft (10m)		1.1	0.9	0.7
3.3 ft (1m)	0 ft (0m)	3.7	3.4	3.2	2.9
	6 ft (2m)	2.9	2.6	2.4	2.1
	13 ft (4m)	0.5	1.8	1.6	1.3
	20 ft (6m)		1.2	1.1	
6.6 ft (2m)	0 ft (0m)	2.9	2.6	2.4	2.1
	6 ft (2m)	2.4	2.1	1.8	1.6
	13 ft (4m)		1.5	1.3	1.2
10 ft (3m)	0 ft (0m)	2.6	2.4	2.1	1.8
	6 ft (2m)	2.1	1.8	1.6	1.3
	13 ft (4m)		1.3	1.1	

ONE PUMP

One pump suitable for ALL Daikin models
from 0 to 42 kBtu/hr (12.5 kW – 3.5 tons*)

- 5 gph
- High capacity, less run time = RELIABILITY

* The indicated 3.5 ton rating applies to approved Daikin models. The performance rating of the Si-30 pump allows for use on units up to 5.6 tons

SILENT OPERATION

- High performance with low operating sound levels
- Flexible & Easy to install and maintain
- Ideal for Bedroom use

COMPLETE INSTALLATION KIT INCLUDED

Everything you need for a complete installation

- Unique self sealing discharge fitting included
- Drain Safe Device
  Combines mechanical and gravity drain
  Allows condensates to clear efficiently, keeping the pump primed at all times.

DACA-CP3-1

(230 V) Mini & Multi-Split, SKYAIR & QUATERNITY INDOOR UNITS

Models: (FTXS09, 12, 15, 18, 24, 30, 36 LVJU) (FTXN09, 12 KEVJU) (FTXN15, 18, 24 KVJU) (FTXG09, 12, 15 HVJU) (CTXS07 HVJU) (CTXS07 LVJU) (CTXS09,12 HVJU) (FDXS09, 12 DVJU) (FDXS09, 12 LVJU) (CDXS15, 18 LVJU)
SkyAir: FTXS30, 36 LVJU

Wiring instructions

Si-30

Intertek 112447

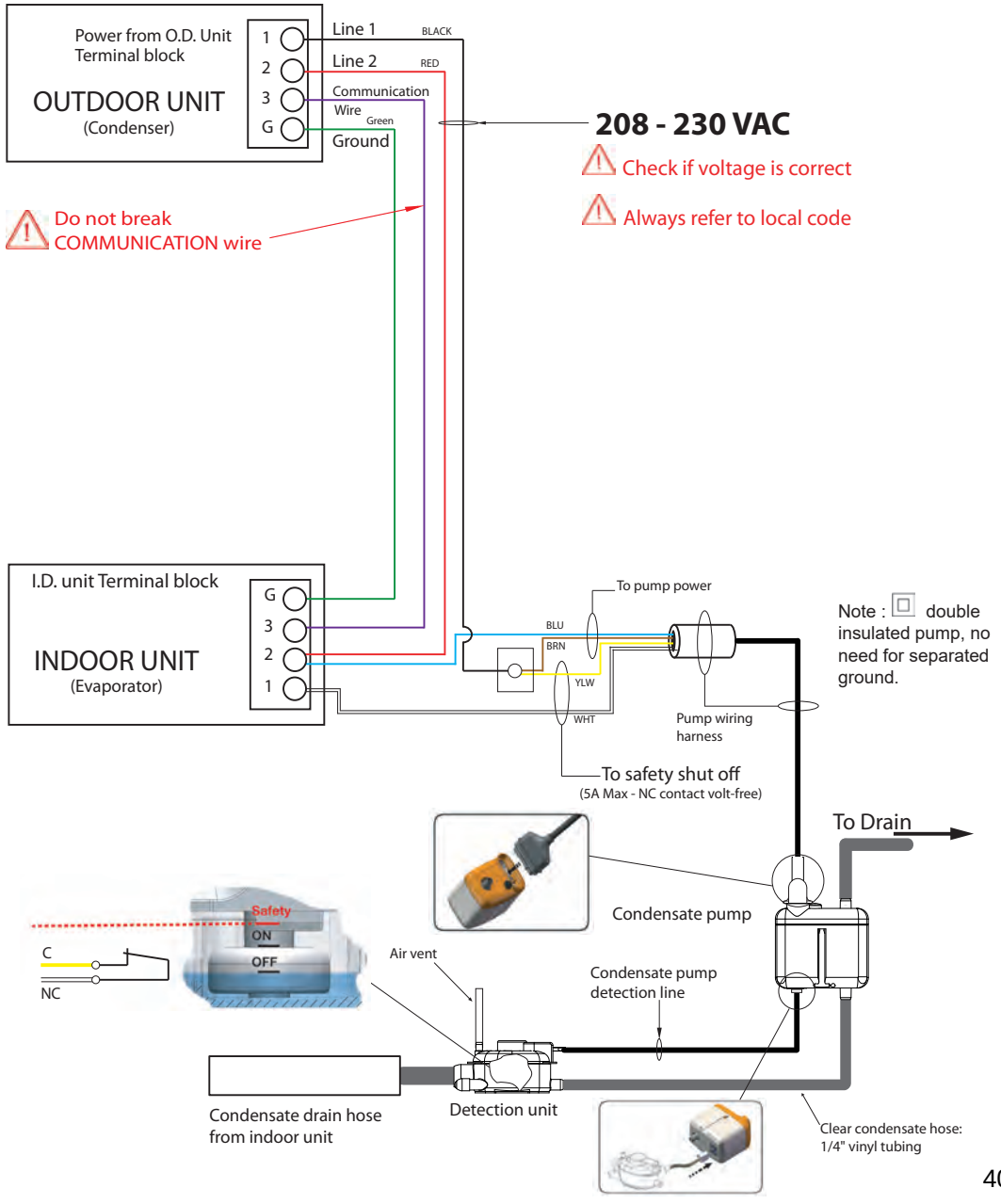

DACA-CP3-1

(230V) VRV & SKYAIR SERIES INDOOR UNITS

Models with GREEN jumper:
SkyAir: (FHQ18, 24, 30 PVJU) (FHQ36, 42 MVJU)
VRV: (FXHQ12, 24, 36 MVJU) (FXLQ12, 18, 24 MVJU) (FXNQ12, 18, 24 MVJU)

(230V) VRV & SKYAIR SERIES IN

Models with WHITE jumper:
SkyAir: (FAQ18, 24 PVJU)
VRV: (FXAQ07, 09, 12, 18, 24 PVJU)

Wiring instructions

Si-30

Intertek 112447

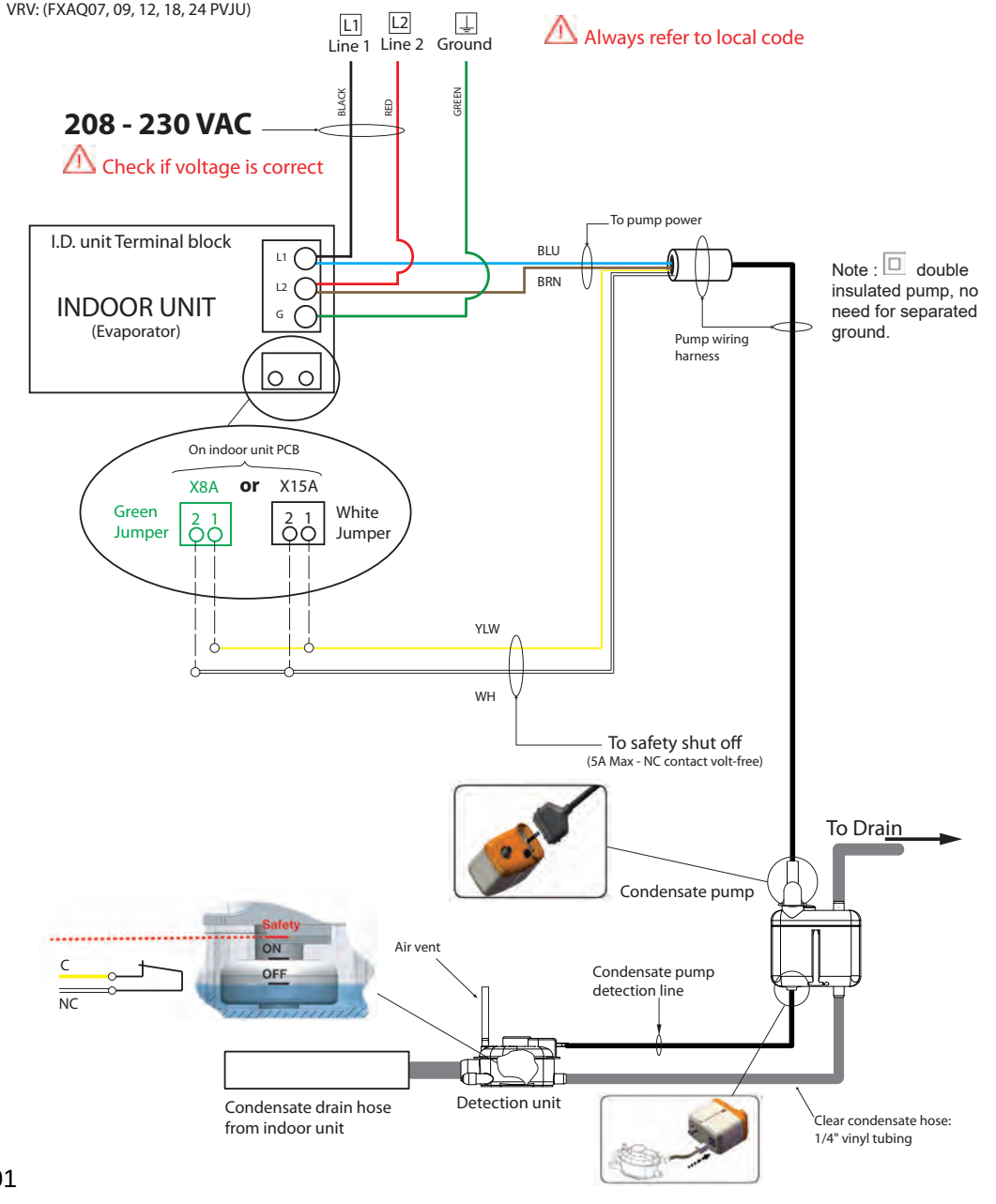

Submittal Data Sheet

DACA-CFS1

Electronic Condensate Overflow Switch

Designed for Daikin Ductless Mini-splits

Project Information:
Job Name:
Location:
Engineer:
Submitted to:
For: ❑ Reference ❑ Approval ❑ Construction
Submitted by:
Reference:

Submittal Information:
Approval:
Date:
Construction:
Unit #:
Drawing #:

(Sec. I) Ordering Information:

Product Code - DACA-CFS1
Model - DACA-CFS1
Carton Qty - 12
Carton Weight - 4 lbs.

(Sec. II) Product Specifications:

CPU Length – 2.5”
CPU Width – 1.4”
CPU Height – 1”
Power Supply – 15 to 250 Volts AC/DC
Switching Capacity – 0 to 250 Volts AC, 5A, 1250VA; 0 to 100 Volts DC, 5A, 150W
Contact – NC/NO
Probe Cable Length – 4’
Lead Cable Length – 2’
Power Consumption – 0.5 Watt

(Sec. III) Carton Contents:

(Fig. I) Product Image:

c UL us
LISTED
UL 508
5A 250V AC
5A 30V DC

(Fig. II) Part List:

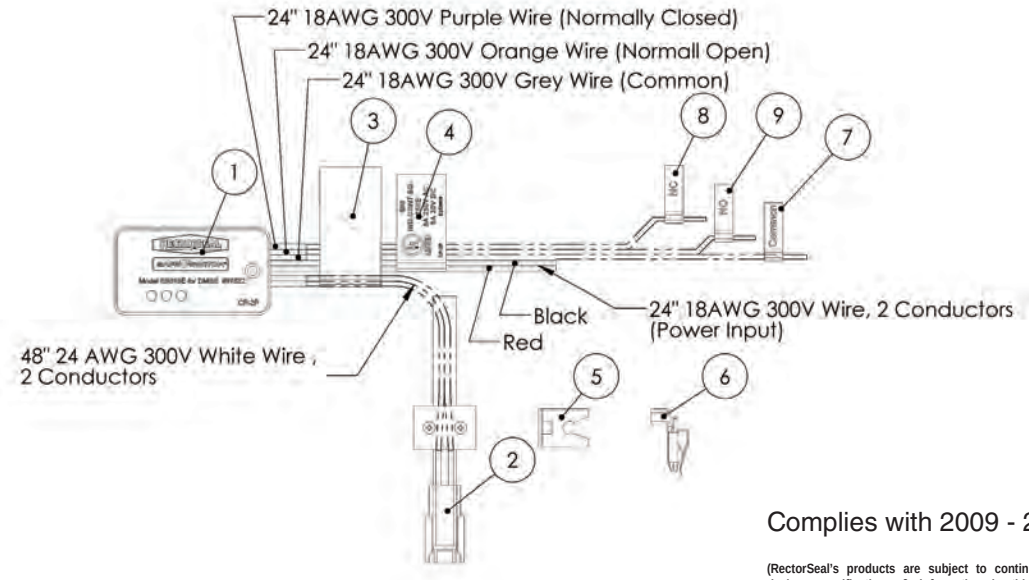

1.) CP-2P
2.) SE-4 Probe with DK-6P bracket
3.) Reset instruction tag
4.) UL tag, CP-2P
5.) Part 1 for 5mm tube BK-6P
6.) BK-5P Bracket
7.) Tag, Common
8.) Tag, Normally Closed
9.) Tag, Normally Open

Complies with 2009 - 2012 IMC & IRC

(RectorSeal’s products are subject to continuous improvements; RectorSeal reserves the right to modify product design, specifications & information in this data sheet without notice and without incurring any obligations)

www.rectorseal.com 2601 Spenwick Drive, Houston, TX 77055 713.263.8001 - 800.231.3345 713.263.7577 - 800.441.0051

©2013 RectorSeal®

Date Received: 10/16/2017
Date Reviewed: 10/17/2017

Reviewed by: Scott Miles	**Work Order Number:** 90170-079
Submittal Number: 260553-01R1	**Contract Number:** CA1435129
Specification Number: 260553	**Project:** Prince Frederick Fire & Life Safety Phase 2
Specification Name: Raceways and Boxes	**Doc Id:** 20802

The following has been reviewed for general arrangement. Any approval is subject to compliance with all contract requirements. Detailed dimensions and quantities have not been checked.

Comments and Actions

ITEM	DESCRIPTION/COMMENT	ACTION
EMT	Approved for indoor use only	AN
EMT conduit fitting	Approved for indoor use only	AN
THHN cable	Submit under correct specification reference 260519	ANR

Action Codes:

A– Approved	**AN** – Approved as noted
ANR – Approved as noted; return record copy	**RR** – Revise and resubmit
REJ – Rejected	**RA** – Receipt acknowledged

General Contractor: *Contact Name* Sue E. Davis *Firm Name* S E Davis Construction, LLC *Address* P.O. Box 1008, La Plata, MD 20646 *Telephone* 301-870-2400 *Email Address* sue@sedavisconstruction.com	*Contractor:* *Contact Name* Ryan Schneider *Firm Name* Line Load Electrical Contractors *Address* 27 Henry Ford Circle, Waldorf, MD 20602 *Telephone* 301-932-4033 *Email Address* ryan@lineload.net	*Contact Name* Ryan James *Firm Name* State Highway Administration *Address* 138 Defense Highway, Annapolis, MD 21401 *Telephone* 443-532-5824 *Email Address* rjames@sha.state.md.us

GC Submittal №:	CA1435129-260553.01R
Subcontractor:	Line Load Electrical Contractors
Supplier(s):	
Specification №/Dwg. Reference:	260553
Section Title:	Raceways and Boxes
Submittal Description/Items Submitted:	Electrical Metallic Tubing (EMT) and True Color EMT
	Electrical Metallic Tubing EMT Tubing (EMT) Elbows
	EMT Steel Compression Connectors and Couplings
	SIMpull THHN

General Contractor's Stamp	*Architect's Stamp*
Engineer's Stamp	

LINE LOAD
ELECTRICAL CONTRACTORS INC.

Product Submittal For:

State Highway Administration

Life Safety & Fire Code Improvements

Phase II

Prince Frederick, Maryland

General Electrical Material

27 Henry Ford Circle ■ Waldorf, MD 20602 ■ Phone 301-932-4033 ■ Fax 301-932-4035

Electrical Metallic Tubing (EMT) and True Color™ EMT

E-Z Pull® EMT

- Hot galvanized steel using patented inline Flo-Coat® process for long lasting exterior protection
- E-Z Pull interior coating provides a smooth raceway for fast, easier wire-pulling
- Excellent mechanical protection for conductors
- Ductility for faster and easier bending
- Optimal EMI shielding characteristics
- Listed to Underwriters Laboratories Safety Standard UL 797
- Manufactured in accordance with ANSI C80.3
- Available in sizes 1/2 (16) - 4 (103)

Quality Electrical Metallic Tubing

True Color™ EMT

- All the benefits of E-Z Pull EMT
- Instant identification of multiple circuits
- Fire Alarm® Red EMT
- Healthcare Green EMT
- Data Com Blue EMT
- Available in 8 colors
- Available in sizes 1/2 (16) - 4 (103)

Identify Important Circuits Instantly!

True Color™ Applications

Black EMT
- Blends in dark colored areas

Fire Alarm® EMT
- Emergency circuits
- Fire alarm and Security systems

Orange EMT
- Construction/research areas
- Fiber optic systems
- Auto repair/maintenance

Yellow EMT
- High voltage wiring
- Caution areas
- Special equipment

Green EMT
- Hospital and healthcare areas
- Nurse call stations
- Critical circuits

Blue EMT
- Low voltage wiring
- Data com/video
- Network security

Purple EMT
- Specialty wiring systems
- Security systems

White EMT
- Blends in light colored areas

Silver EMT
- Standard Use
- Contemporary architecture

Project Information

Company Name: _____
Address: _____
City: _____
State & Zip: _____
Phone: _____
Project Name: _____
City: _____
State: _____

www.alliedeg.com

Electrical Metallic Tubing (EMT) and True Color™ EMT

FEATURES & SPECIFICATIONS

Manufactured for Long Life

Allied Tube & Conduit® EMT is precision manufactured from high grade mild strip steel for exceptional durability and long-lasting life. Allied EMT is hot galvanized using a patented inline Flo-Coat® process. This process combines zinc, a conversion coating, and a clear organic polymer topcoat to form a triple layer of protection against corrosion and abrasion.

E-Z Pull® EMT combines strength with ductility, providing easy bending, cutting and joining while resisting flattening, kinking and splitting. Available in sizes 1/2 (16) - 4 (103).

Coatings

Allied's EMT (Electrical Metallic Tubing) has a special low friction ID coating called E-Z Pull that greatly improves the slip properties between conduit and wire. With E-Z Pull EMT, wire pulls through the EMT smoothly and easily, making installation easier and faster.

EMI Shielding

Allied EMT is very effective in reducing electromagnetic field levels for encased power distribution circuits, shielding computers and other sensitive electronic equipment from the effects of electromagnetic interference.
For more information on EMT shielding, visit www.alliedeg.com to obtain the **GEMI** (**G**rounding and **E**lectro-**M**agnetic **I**nterference) software analysis program.

Codes & Standards Compliance

Allied EMT is listed to Underwriters Laboratories Safety Standard UL 797 and meets ANSI C80.3. These standards have been adopted as federal specifications in lieu of WWC 563. EMT is recognized as an equipment grounding conductor by NEC Section 250-118. Documentation for compliance with NEC Article 250 is also available in the **GEMI** (**G**rounding and **E**lectro-**M**agnetic **I**nterference) analysis software and related research studies found at the www.alliedeg.com website.

Installation of EMT shall be in accordance with the National Electrical Code and the UL listing information. Allied EMT is listed in category FJMX. Master bundles conform to NEMA Standard RN2.

Specification Data

To specify Allied EMT, include the following: Electrical Metallic Tubing shall be equal to that manufactured by Allied Tube & Conduit Corporation. EMT shall be hot galvanized steel O.D. with an organic corrosion resistant I.D. coating, and shall be listed to UL Safety Standard 797 and manufactured in accordance with ANSI C80.3.

Electrical Metallic Tubing (EMT) and True Color™ EMT

Listed to Underwriters Laboratories Safety Standard UL 797
Manufactured in accordance with ANSI C80.3

Trade Size	Metric Designator	Outside Diameter[1]		Nominal Wall Thickness[2]		Approximate Weight Per 100 Ft. (30.5M)		Red and Galvanized Master Bundle Quantity		True Color** Bundle Qty.	
		in	mm	in	mm	lb	kg	ft	m	ft	m
1/2	16	0.706	17.93	0.042	1.07	30	13.6	7000	2135	3500	1066.8
3/4	21	0.922	23.42	0.049	1.24	46	20.9	5000	1525	2500	762.0
1	27	1.163	29.54	0.057	1.45	67	30.4	3000	915	1500*	457.2
1-1/4	35	1.510	38.35	0.065	1.65	101	45.8	2000	610	2000	609.6
1-1/2	41	1.740	44.20	0.065	1.65	116	52.6	1500	457.5	1500	457.2
2	53	2.197	55.80	0.065	1.65	148	67.1	1200	366.0	1200	365.7
2-1/2	63	2.875	73.03	0.072	1.83	216	98.0	610	186.1	610	185.9
3	78	3.500	88.90	0.072	1.83	263	119.3	510	155.6	510	155.4
3-1/2	91	4.000	101.60	0.083	2.11	349	158.3	370	112.9	370	112.7
4	103	4.500	114.30	0.083	2.11	393	178.3	300	91.5	300	91.5

[1]Outside diameter tolerances: +/- .005 in. (.13mm) for trade sizes 1/2 (16mm) through 2 (53mm);
+/- .010 in. (.25mm) for trade sizes 2-1/2 (63mm);
+/- .015 in. (.38mm) for trade size 3 (78mm);
+/- .020 in. (.51mm) for trade sizes 3-1/2 (91mm) and 4 (103mm).

*Blue trade size 1 master bundle size: 3000 ft / 915 m
** Other Color Trade Sizes 2 - 4 are available thru special order
NOTE: Length = 10 ft. (3.05m) with a tolerance of +/- .25 in. (6.35 mm)

NOTE: Special orders are non-cancelable, non-returnable and non-refundable

16100 S. Lathrop Ave., Harvey, IL 60426
Phone / 708.339.1610 • Toll-Free / 800.882.5543
www.alliedeg.com

Electrical Metallic Tubing (EMT) Elbows

EMT 90° Elbows

Listed to Underwriters Laboratories Safety Standard UL 797
Manufactured in accordance with ANSI C80.3

Trade Size	Metric Designator	Radius (A)[1]		Offset (B)[2]		Straight (D)[1]		Approximate Weight Per 100 Pieces		Standard Package
		in	mm	in	mm	in	mm	lb	kg	
1/2	16	4	102	5 7/8	149	1 1/2	38	25	11.3	25
3/4	21	4 1/2	114	7	178	1 1/2	38	46	20.9	50
1	27	5 3/4	146	8 3/4	222	1 7/8	48	84	38.1	25
1 1/4	35	7 1/4	184	10 1/8	257	2	51	144	65.3	20
1 1/2	41	8 1/4	210	11 3/4	298	2	51	193	87.5	15
2	53	9 1/2	241	14	356	2	51	296	134.3	10
2 1/2	63	10 1/2	267	16 1/4	413	3	76	504	228.6	1
3	78	13	330	18 3/4	476	3 1/8	79	701	318.0	1
3 1/2	91	15	381	21 1/4	540	3 1/4	83	1047	474.9	1
4	103	16	406	23 3/8	594	3 3/8	86	1310	594.2	1

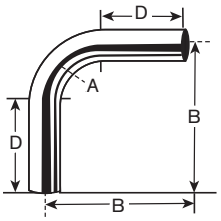

[1]Minimum requirement as per UL Standard
[2]Dimensions and weights are approximate
Sizes 2-1/2 (63) and larger shipped in palletized cartons or bulk.
Also available in the following Degrees (60°, 45°, 30°, 22-1/2°, 15° & 11-1/4°)

EMT 45° Elbows

Listed to Underwriters Laboratories Safety Standard UL 797
Manufactured in accordance with ANSI C80.3

Trade Size	Metric Designator	Radius (A)[1]		Offset (B)[2]		Offset (C)[2]		Straight (D)[1]		Approximate Weight Per 100 Pieces		Standard Package
		in	mm	in	mm	in	mm	in	mm	lb	kg	
1/2	16	4	102	6 1/8	156	2 1/2	64	1 1/2	38	18	8.2	25
3/4	21	4 1/2	114	7 3/8	187	3 1/8	79	1 1/2	38	33	15.0	50
1	27	5 3/4	146	8 3/4	222	3 5/8	92	1 7/8	48	56	25.4	25
1 1/4	35	7 1/4	184	10 1/8	257	4 1/8	105	2	51	97	44.0	20
1 1/2	41	8 1/4	210	13 1/8	333	5 3/8	137	2	51	145	65.8	15
2	53	9 1/2	241	13 1/8	333	5 1/2	140	2	51	185	83.9	10
2 1/2	63	10 1/2	267	17 1/2	445	7 1/4	184	3	76	360	163.3	1
3	78	13	330	17 1/2	445	7 1/4	184	3 1/8	79	438	198.7	1
3 1/2	91	15	381	26 1/8	664	10 7/8	276	3 1/4	83	873	396.0	1
4	103	16	406	26 1/4	667	10 7/8	276	3 3/8	86	983	445.9	1

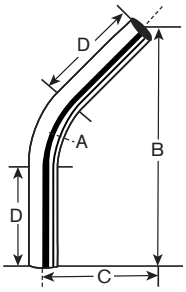

[1]Minimum requirement as per UL Standard
[2]Dimensions and weights are approximate
Sizes 2-1/2 (63) and larger shipped in palletized cartons or bulk.
Also available in the following Degrees (90°, 60°, 30°, 22-1/2°, 15° & 11-1/4°)

NOTE: Special orders are non-cancelable, non-returnable and non-refundable

16100 S. Lathrop Ave., Harvey, IL 60426
Phone / 708.339.1610 • Toll-Free / 800.882.5543
www.alliedeg.com

Electrical Metallic Tubing (EMT) Elbows

EMT Large Radius 90° Elbows

Listed to Underwriters Laboratories Safety Standard UL 797
Manufactured in accordance with ANSI C80.3

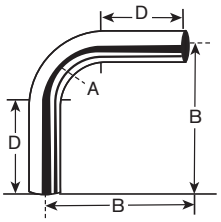

Trade Size	Metric Designator	Radius (A)		Offset (B)[2]		Straight (D)[2]		Approximate Weight Per 100 Pieces	
		in	mm	in	mm	in	mm	lb	kg
1	27	12	305	20 5/8	524	8 5/8	219	201	91.2
1	27	15	381	24 1/4	616	9 1/4	235	235	106.6
1	27	18	457	27 7/8	708	9 7/8	251	268	121.6
1	27	24	610	34 5/8	879	10 5/8	270	329	149.2
1	27	30	762	41	1041	11	279	385	174.6
1	27	36	914	46 3/4	1187	10 3/4	273	436	197.8
1	27	42	1067	54	1372	12	305	503	228.2
1	27	48	1219	60 1/4	1530	12 1/4	311	558	253.1
1 1/4	35	12	305	20 5/8	524	8 5/8	219	303	137.4
1 1/4	35	15	381	24 1/4	616	9 1/4	235	354	160.6
1 1/4	35	18	457	27 7/8	708	9 7/8	251	404	183.3
1 1/4	35	24	610	34 5/8	879	10 5/8	270	497	225.4
1 1/4	35	30	762	41	1041	11	279	581	263.5
1 1/4	35	36	914	46 3/4	1187	10 3/4	273	657	298.0
1 1/4	35	42	1067	54	1372	12	305	758	343.8
1 1/4	35	48	1219	60 1/4	1530	12 1/4	311	842	381.9
1 1/2	41	15	381	24 1/4	616	9 1/4	235	406	184.2
1 1/2	41	18	457	27 7/8	708	9 7/8	251	464	210.5
1 1/2	41	24	610	34 5/8	879	10 5/8	270	570	258.6
1 1/2	41	30	762	41	1041	11	279	667	302.6
1 1/2	41	36	914	46 3/4	1187	10 3/4	273	754	342.0
1 1/2	41	42	1067	54	1372	12	305	870	394.6
1 1/2	41	48	1219	60 1/4	1530	12 1/4	311	967	438.6
2	53	15	381	24 1/4	616	9 1/4	235	518	235.0
2	53	18	457	27 7/8	708	9 7/8	251	592	268.5
2	53	24	610	34 5/8	879	10 5/8	270	728	330.2
2	53	30	762	41	1041	11	279	851	386.0
2	53	36	914	46 3/4	1187	10 3/4	273	962	436.4
2	53	42	1067	54	1372	12	305	1110	503.5
2	53	48	1219	60 1/4	1530	12 1/4	311	1233	559.3
2 1/2	63	18	457	27 7/8	708	9 7/8	251	864	391.9
2 1/2	63	24	610	34 5/8	879	10 5/8	270	1062	481.7
2 1/2	63	30	762	41	1041	11	279	1242	563.4
2 1/2	63	36	914	46 3/4	1187	10 3/4	273	1404	636.9
2 1/2	63	42	1067	54	1372	12	305	1620	734.8
2 1/2	63	48	1219	60 1/4	1530	12 1/4	311	1800	816.5

[2]For information only, not a requirement as per UL Standard
Sizes 2-1/2 (63) and larger shipped in palletized cartons or bulk.
Also available in the following Degrees (60°, 45°, 30°, 22-1/2°, 15° & 11-1/4°)

Chart continued on the next page

NOTE: Special orders are non-cancelable, non-returnable and non-refundable

16100 S. Lathrop Ave., Harvey, IL 60426
Phone / 708.339.1610 • Toll-Free / 800.882.5543
www.alliedeg.com

Electrical Metallic Tubing (EMT) Elbows

EMT Large Radius 90° Elbows (continued)

Listed to Underwriters Laboratories Safety Standard UL 797
Manufactured in accordance with ANSI C80.3

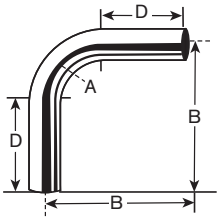

Trade Size	Metric Designator	Radius (A)		Offset (B)[2]		Straight (D) [2]		Approximate Weight Per 100 Pieces	
		in	mm	in	mm	in	mm	lb	kg
3	78	15	381	24 1/4	616	9 1/4	235	921	417.8
3	78	18	457	27 7/8	708	9 7/8	251	1052	477.2
3	78	24	610	34 5/8	879	10 5/8	270	1293	586.5
3	78	30	762	41	1041	11	279	1512	685.8
3	78	36	914	46 3/4	1187	10 3/4	273	1710	775.7
3	78	42	1067	54	1372	12	305	1973	895.0
3	78	48	1219	60 1/4	1530	12 1/4	311	2192	994.3
3 1/2	91	18	457	27 7/8	708	9 7/8	251	1396	633.2
3 1/2	91	24	610	34 5/8	879	10 5/8	270	1716	778.4
3 1/2	91	30	762	41	1041	11	279	2007	910.4
3 1/2	91	36	914	46 3/4	1187	10 3/4	273	2269	1029.2
3 1/2	91	42	1067	54	1372	12	305	2618	1187.5
3 1/2	91	48	1219	60 1/4	1530	12 1/4	311	2908	1319.1
4	103	24	610	34 5/8	879	10 5/8	270	1932	876.4
4	103	30	762	41	1041	11	279	2260	1025.1
4	103	36	914	46 3/4	1187	10 3/4	273	2555	1158.9
4	103	42	1067	54	1372	12	305	2948	1337.2
4	103	48	1219	60 1/4	1530	12 1/4	311	3275	1485.5

[2]For information only, not a requirement as per UL Standard
Sizes 2-1/2 (63) and larger shipped in palletized cartons or bulk.
Also available in the following Degrees (60°, 45°, 30°, 22-1/2°, 15° & 11-1/4°)

NOTE: Special orders are non-cancelable, non-returnable and non-refundable

16100 S. Lathrop Ave., Harvey, IL 60426
Phone / 708.339.1610 • Toll-Free / 800.882.5543
www.alliedeg.com

EMT Steel Compression Connectors & Couplings

Type 7000S Connectors

Use:
To ground and secure EMT raceway to boxes and enclosures.

Features:
- Male hub threads NPS
- Available with insulated throat
- Concretetight
- 2½" through 4" rated for threadless aluminum RMC and steel IMC.

Material:
Steel Body & Nut
Finish:
Zinc Electroplated

Third Party Certification:
UL Listed: E-14895
Listed Concretetight ½" - 4"

Applicable Third Party Standards:
UL Standard: 514B
CSA Standard: C22.2 No. 18
NEMA: FB-1
Federal Spec: W-F-408E

Trade Size (inches)	Catalog Number	Insulated Throat Catalog Number	Dimensions in Inches Body Length	Max Dia.	Thread Length
½	7050S	7050ST	1 1/8	1 1/16	3/8
¾	7075S	7075ST	1 1/32	1 1/4	7/16
1	7100S	7100ST	1 1/4	1 9/16	9/16
1¼	7125S	7125ST	1 13/16	2	9/16
1½	7150S	7150ST	2	2 3/16	9/16
2	7200S	7200ST	2 1/4	2 11/16	11/16
2½	7250S	7250ST	2 3/8	3 11/32	7/8
3	7300S	7300ST	2 7/8	4	7/8
3½	7350S	7350ST	3	4 1/2	1
4	7400S	7400ST	3 3/16	5 1/16	1

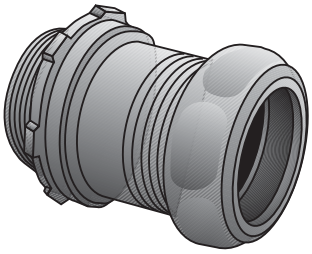

Type 7050S — Type 7400S

Type 6000S Couplings

Use:
To ground and secure EMT raceway sections together.

Features:
- Concretetight
- 2½" through 4" rated for threadless aluminum RMC and steel IMC.

Material:
Steel Body & Nut

Finish:
Zinc Electroplated

Third Party Certification:
UL Listed: E-14895
Listed Concretetight ½" - 4"

Applicable Third Party Standards:
UL Standard: 514B
CSA Standard: C22.2 No. 18
NEMA: FB-1
Federal Spec: W-F-408E

Trade Size (inches)	Catalog Number	Dimensions in Inches Body Length	Max. Dia.
½	6050S	3/8	27/32
¾	6075S	1 1/2	1 3/8
1	6100S	1 21/32	1 5/16
1¼	6125S	2 1/2	1 11/16
1½	6150S	2 1/2	1 15/16
2	6200S	2 1/2	2 3/8
2½	6250S	4 1/4	3 1/8
3	6300S	4 1/2	3 3/4
3½	6350S	4 3/4	4 1/4
4	6400S	5	4 3/4

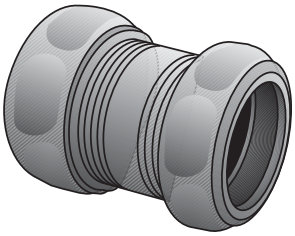

Type 6050S — Type 6400S

Copyright 2007

EMT Steel Compression Connectors & Couplings

Type 7000US Connectors

Features:
- Male hub threads NPS
- Available with insulated throat
- Concretetight

Material/Finish:
Steel/Zinc Plated ½" through 2"
Malleable Iron/Zinc Plated 2½" through 4"

Third Party Certification:
UL Listed: E-14895

Applicable Third Party Standards:
UL Standard: 514B
CSA Standard: C22.2 No. 18
NEMA: FB-1
Federal Spec: W-F-408E

Trade Size (inches)	Catalog Number	Insulated Throat Catalog Number	Dimensions in Inches Body Length	Max Dia.	Thread Length
½	7050US	7050UST	1-1/16	31/32	3/8
¾	7075US	7075UST	1-1/8	1-7/32	13/32
1	7100US	7100UST	1-1/4	1-1/2	7/16
1¼	7125US	7125UST	1-7/16	1-29/32	1/2
1½	7150US	7150UST	1-9/16	2-5/32	17/32
2	7200US	7200UST	1-11/16	2-11/16	19/32
2½	7250US	7250UST	4-1/16	4-1/8	1-1/4
3	7300US	7300UST	4-1/8	4-11/16	1-3/8
3½	7350US	7350UST	4-1/4	5-11/32	1-13/32
4	7400US	7400UST	4-1/2	5-7/8	1-1/2

Made in the USA

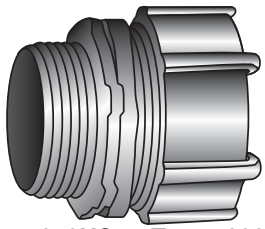
Type 7050US — Type 7200US

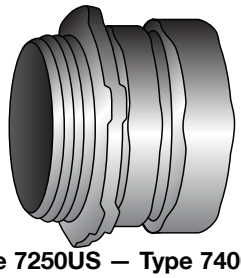
Type 7250US — Type 7400US

Type 6000US Couplings

Features:
- Concretetight

Material/Finish:
Steel/Zinc Plated ½" through 2"
Malleable Iron/Zinc Plated 2½" through 4"

Third Party Certification:
UL Listed: E-14895

Applicable Third Party Standards:
UL Standard: 514B
CSA Standard: C22.2 No. 18
NEMA: FB-1
Federal Spec: W-F-408E

Trade Size (inches)	Catalog Number	Dimensions in Inches Body Length	Max. Dia.
½	6050US	1-11/32	31/32
¾	6075US	1-11/32	1-7/32
1	6100US	1-13/32	1-1/2
1¼	6125US	1-3/4	1-29/32
1½	6150US	1-7/8	2-5/32
2	6200US	2-1/8	2-11/16
2½	6250US	5-1/2	4-1/8
3	6300US	5-1/2	4-11/16
3½	6350US	5-5/8	5-11/32
4	6400US	5-3/4	5-7/8

Made in the USA

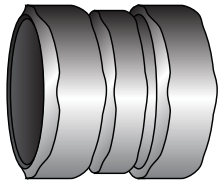
Type 6050US — Type 6200US

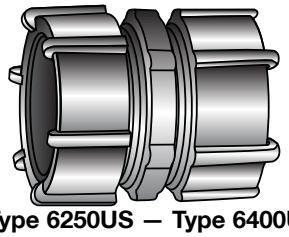
Type 6250US — Type 6400US

Copyright 2008

LINE-LOAD
ELECTRICAL CONTRACTORS INC.

Product Submittal For:

State Highway Administration

Life Safety & Fire Code Improvements

Phase II

Prince Frederick, Maryland

LV Conductors

27 Henry Ford Circle ■ Waldorf, MD 20602 ■ Phone 301-932-4033 ■ Fax 301-932-4035

SIMpull THHN®

600 Volts. Copper Conductor
Thermoplastic Insulation/SIM Nylon Sheath
Heat, Moisture, Gasoline, and Oil Resistant [1]
Also Rated MTW and THWN-2
SIM Technology® for easier pulling

APPLICATIONS

Southwire SIMpull THHN ® or THWN-2 conductors are primarily used in conduit and cable trays for services, feeders, and branch circuits in commercial or industrial applications as specified in the 2008 National Electrical Code. When used as Type THHN, or T90 Nylon conductor is suitable for use in dry locations at temperatures not to exceed 90 °C. When used as Type THWN-2 or TWN75, conductor is suitable for use in wet or dry locations at temperatures not to exceed 90 °C or not to exceed 75 °C when exposed to oil. When used as Type MTW, conductor is suitable for use in wet locations or when exposed to oil at temperatures not to exceed 60 °C or dry locations at temperatures not to exceed 90 °C (with ampacity limited to that for 75 °C conductor temperature per NFPA 79). Conductor temperatures not to exceed 105 °C in dry locations when rated AWM and used as appliance wiring material or when used asT90 Nylon. Voltage for all applications is 600 volts. This cable should be installed without application of pulling lubricant.

SPECIFICATIONS

Southwire SIMpull THHN ® or THWN-2 or MTW (also AWM) meet or exceed

- All applicable ASTM specifications
- UL Standard 83, 1581, and 1063(MTW)
- CSA
- NOM-ANCE 90° C
- Federal Specification A-A-59544
- The National Electrical Code
- VW-1 - Sizes 14 through 1 AWG
- CT - UL 1685, Sizes 1/0 AWG and larger for CT use
- FT1 - Sizes through 500 kcmil
- T90 Nylon - Sizes through 500 kcmil
- TWN 75 - Sizes through 500 kcmil
- RoHS Compliant
- Sunlight Resistant - Marked and listed in all colors 2 AWG and larger
- NEMA WC 70 Construction Requirements

CONSTRUCTION

Southwire SIMpull THHN ® or THWN-2 or MTW copper conductors are annealed (soft) copper, unilay compressed strand, insulated with a tough heat and moisture resistant polyvinyl chloride (PVC), over which a SIM (SLIKQWIK® Infused Membrane) nylon (polyamide) or UL Recognized equal jacket is applied. Available in black, white, red, blue, purple, green, yellow, brown, orange, and gray. Some colors standard, some subject to economic order quantity. THWN-2 available on sizes #8 AWG and larger.

[1] Oil and gasoline resistant II as defined by Underwriters Laboratories.

Southwire
One Southwire Drive
Carrollton, Ga. 30119 USA

NoLube™

Copyright 2007, Southwire Company.
All Rights Reserved.
®Southwire is a registered trademark of Southwire Company

SIMpull THHN

Conductor		Insulation Thickness (mils)	Jacket Thickness (mils)	Nominal O.D. (mils)		Approx. Net Weight Per 1000 ft. (lbs)		Allowable Ampacities+			Standard Package
Size (AWG or kcmil	Num. Strands			Sol.	Str.	Sol.	Str.	60 °C	75 °C	90 °C	
14	19	15	4	102	109	15	16	15	15	15	DNF
12	19	15	4	119	128	23	24	20	20	20	DNF
10	19	20	4	150	161	36	38	30	30	30	DQF
8	19	30	5	--	213	--	63	40	50	55	F
6	19	30	5	--	249	--	95	55	65	75	E
4	19	40	6	--	318	--	152	70	85	95	C
3	19	40	6	--	346	--	189	85	100	110	BC
2	19	40	6	--	378	--	234	95	115	130	C
1	19	50	7	--	435	--	299	110	130	150	B
1/0	19	50	7	--	474	--	372	125	150	170	B
2/0	19	50	7	--	518	--	462	145	175	195	B
3/0	19	50	7	--	568	--	575	165	200	225	B
4/0	19	50	7	--	624	--	718	195	230	260	B
250	37	60	8	--	678	--	851	215	255	290	B
300	37	60	8	--	730	--	1012	240	285	320	B
350	37	60	8	--	777	--	1174	260	310	350	B
400	37	60	8	--	821	--	1334	280	335	380	B
500	37	60	8	--	902	--	1655	320	380	430	B
600	61	70	9	--	998	--	1987	355	420	475	C
750	61	70	9	--	1126	--	2464	400	475	535	C
1000	61	70	9	--	1275	--	3257	455	545	615	C

**Sizes 14 - 10 AWG not available with patented SIM Technology® No Lube® jacket.
Sizes 8 and larger available with patented SIM Technology®.
+ Allowable ampacities shown are for general uses as specified by the National Electrical Code, 2008 Edition, section 310.15 unless the equipment is marked for use at higher temperatures the conductor ampacity shall be limited to the following.
60 °C - When terminated to equipment for circuits rated 100 amperes or less or marked for size 14 through 1 AWG conductors. MTW wet locations or when exposed to oil or coolant.
75 °C - When terminated to equipment for circuits rated over 100 amperes or marked for conductors larger than size 1 AWG.
THWN-2 when exposed to oil or coolant. MTW dry locations.
90 °C - THHN dry locations. THWN-2 wet or dry locations. For ampacity derating purposes.
For derating purposes use Article 315 of the National Electrical Code

Southwire
One Southwire Drive
Carrollton, Ga. 30119 USA

NoLube™

Copyright 2007, Southwire Company.
All Rights Reserved.

®Southwire is a registered trademark of Southwire Company

Date Received: 9/15/2017
Date Reviewed: 10/02/2017

Reviewed by: S. Miles	**Work Order Number:** 90170-079
Submittal Number: 260923-01	**Contract Number:** CA1435129
Specification Number: 260923	**Project:** Prince Frederick Fire & Life Safety Phase 2
Specification Name: Lighting Controls	**Doc Id:** 20400

The following has been reviewed for general arrangement. Any approval is subject to compliance with all contract requirements. Detailed dimensions and quantities have not been checked.

Comments and Actions

ITEM	DESCRIPTION/COMMENT	ACTION
General	Transmittal listed incorrect spec reference number 260533 revise to correct reference 260923	ANR
Ceiling Occupancy Sensor "OS"	No Comments	A

Action Codes:

A– Approved	**AN** – Approved as noted
ANR – Approved as noted; return record copy	**RR** – Revise and resubmit
REJ – Rejected	**RA** – Receipt acknowledged

General Contractor: *Contact Name* Sue E. Davis *Firm Name* S E Davis Construction, LLC *Address* P.O. Box 1008, La Plata, MD 20646 *Telephone* 301-870-2400 *Email Address* sue@sedavisconstruction.com	*Contractor:* *Contact Name* Ryan Schneider *Firm Name* Line Load Electrical Contractors *Address* 27 Henry Ford Circle, Waldorf, MD 20602 *Telephone* 301-932-4033 *Email Address* ryan@lineload.net	*Contact Name* Ryan James *Firm Name* State Highway Administration *Address* 138 Defense Highway, Annapolis, MD 21401 *Telephone* 443-532-5824 *Email Address* rjames@sha.state.md.us

GC Submittal №:	CA1435129-260553.01
Subcontractor:	Line Load Electrical Contractors
Supplier(s):	
Specification №/Dwg. Reference:	260553
Section Title:	Lighting Controls
Submittal Description/Items Submitted:	OMNI Low Voltage Dual Tech Ultrasonic and PIR

General Contractor's Stamp	*Architect's Stamp*
Engineer's Stamp	

Shepherd electric supply Since 1892	Job Name:	SHA PHASE II PRINCE FREDERICK SHOP	Type:
	Catalog Number:	OMNIDT2000	COS

OMNI® Low Voltage Dual Technology Ultrasonic and PIR

CEILING MOUNT OCCUPANCY SENSORS

TITLE 24 COMPLIANCE · UL LISTED · OCCUPANCY SENSING · IntelliDAPT

PROJECT INFORMATION

Project Name

Catalog No. Date

OMNIDT2000

The *OMNI* DT combines ultrasonic (US) and passive infrared (PIR) technologies to turn lighting on and off based on occupancy. This dual technology provides accurate turn-ons while virtually eliminating false-offs. This sensor features Hubbell Controls' patented IntelliDAPT® technology, which makes all the sensor adjustments automatically.

Throughout the product's lifespan, *IntelliDAPT* software analyzes the controlled area and makes digital adjustments to sensitivity and timer settings. Occupancy sensors with *IntelliDAPT* technology provide a maintenance-free install-and-forget operation.

PRODUCT FEATURES

- *IntelliDAPT* self-adaptive technology - no manual adjustment required
- All-digital dual technology (ultrasonic [US] and passive infrared [PIR]) sensor
- Non-volatile memory for sensor settings
- 500–2,000 square-foot coverage area (depending on model)
- Optional relay and photocell control
- Optional Quick to Install (QTI) connector
- UL and cUL listed
- California Title 24 compliant
- Five-year limited warranty
- Low Voltage 24 Vdc

Shepherd electric supply Since 1892	Job Name: SHA PHASE II PRINCE FREDERICK SHOP	Type:
	Catalog Number: OMNIDT2000	COS

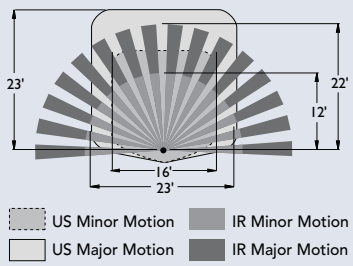

OMNIDT500

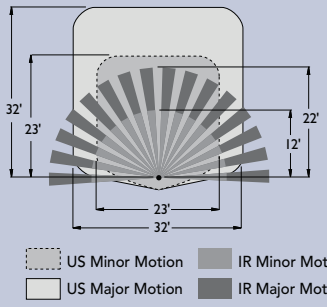

OMNIDT1000

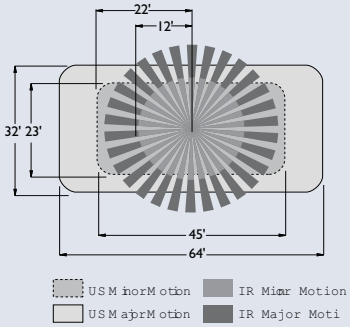

OMNIDT2000

General Specifications

IntelliDAPT® Technology	Auto reset from test setting Self-adjusting timer Self-adjusting passive infrared thresholds Automatic false-on/false-off corrections
LED lamp	Red - infrared motion Green - ultrasonic detection
Timer timeout	Automatic mode: 8–30 min. (self-adjusts based on occupancy) Test mode: 8 seconds (for an easy check at installation)
Ultrasonic (US) output	OMNIDT500: 40kHz output OMNIDT1000 and OMNIDT2000: 32kHz
Passive infrared (PIR)	Dual-element pyrometer and 12-element cylindrical segmented Fresnel lens, integral filter excludes excess PIR energy from sunlight
RP option	Relay and photocell included Relay: N/O + N/C contacts; SPDT; 500 mA rated @ 24VDC; three-wire isolated relay Photocell: adjustable natural-light override ranges from 0 to 100 foot-candles (0 to 1,000 lux)
Coverage	500 - 2,000 square feet
Power requirements	24VDC, 33mA (uses UVPP and MP- Series power pack- not included)
Output	24VDC active high-logic control signal with short circuit protection and optional dry contact (see RP options)
Operating environment	Indoor use only Operating temperature: 32° to 104°F (0° to 40°C) Relative humidity (non-condensing): 0% to 95%
Construction	Casing- rugged, high-impact, injection-molded plastic KJB ABS Cycolac (UL-945VA) flame class rating, UV inhibitors Color-coded leads are 6" long [152.4 mm]
Dimensions	Ø4.5", 1.5" h [Ø114.3mm, 38.1mm h]
Weight	5.0 oz [142g]
Color	Off-white
Mounting	Mounting base provided Recommended mounting height: 8ft with a max mounting height of 12ft.
Certifications	UL and cUL listed
Warranty	Five-year limited

Ordering Information

OMNI®	DT			
MODEL	**TECHNOLOGY**	**COVERAGE**	**RELAY / PHOTOCELL OPTION**	**QTI**
OMNI	**DT** Dual Technology	**500** 500 sq. ft. **1000** 1,000 sq. ft. **2000** 2,000 sq. ft.	**RP** Relay & Photocell **Blank** No Option	**QTI** Quick to Install **Blank** No QTI

Universal Voltage Power Packs

Power Packs and Relays

TITLE 24 COMPLIANCE

UL LISTED

PROJECT INFORMATION

Project Name

Catalog No. Date

UVPP

The Universal Voltage Power Pack (UVPP) is a self-contained transformer and relay designed for low-voltage 24VDC occupancy sensors. The power pack supports and automatically detects the line-voltage input within the 100–277VAC range. This eliminates the need for voltage-specific power packs. The Universal Voltage Power Pack with Manual ON/OFF control (UVPPM) provides a unique solution for lighting applications where users require both manual ON/OFF control as well as automatic OFF control.

Both power packs are capable of switching 20A loads and feature Zero Arc Point Switching, minimizing relay-contact wear from high inrush loads. A single power pack can power either 4 sensors or 3 sensors and the MPSA auxiliary relay for multiple circuits. The power packs are plenum rated and easily mount inside or outside of a junction box or inside a fixture.

PRODUCT FEATURES

- Universal voltage: 100–277VAC; 50/60Hz
- Automatic voltage detection
- Electrical load switching capability: maximum of 20 Amps
- Regulated 24VDC current; 150mA output
- Zero Arc Point Switching
- Plenum rated
- Mounts: inside or outside a junction box; inside a fixture
- Available with exclusive Quick-to-Install (QTI) connector
- Companion auxiliary relay device available (MPSA)
- UL and cUL listed
- Five-year limited warranty
- Low voltage device: 24 Vdc

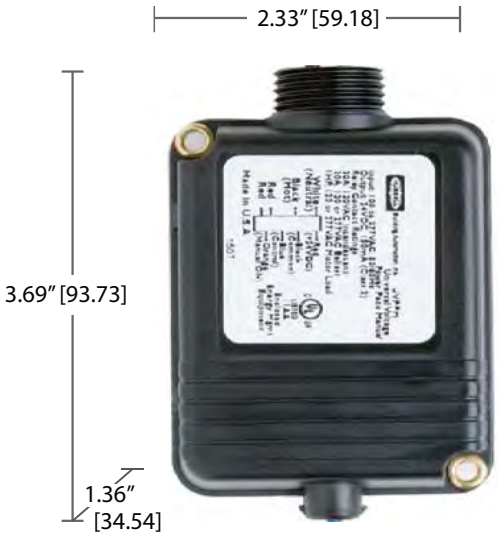

UVPPM

Shepherd electric supply Since 1892	Job Name: SHA PHASE II PRINCE FREDERICK SHOP	Type: PP
	Catalog Number: UVPP / UVPPM	

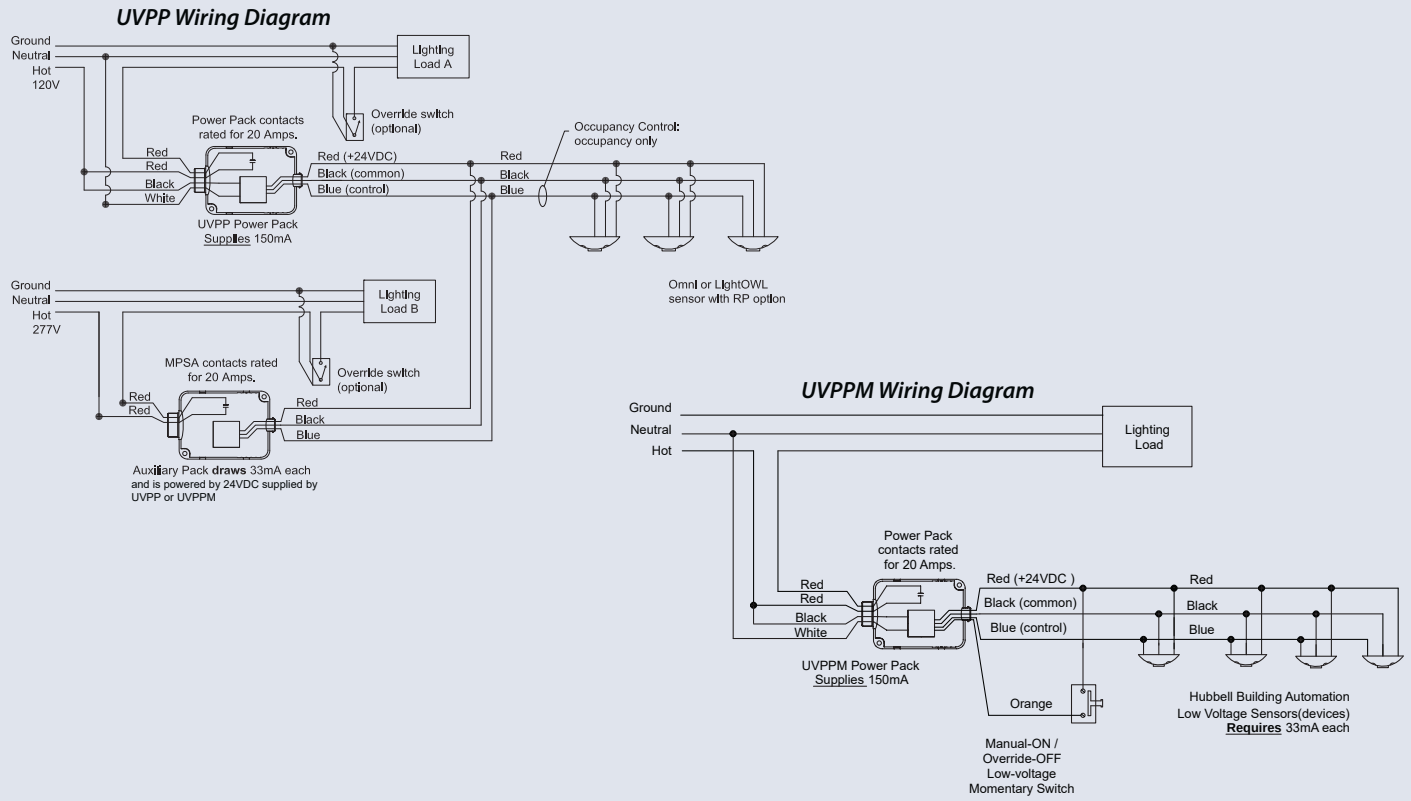

General Specification

Power requirements	100–277VAC; 50/60Hz
Output (UVPP/UPPM)	24VDC; 150mA nominal, isolated, and regulated
Relay contact rating	20A: 120VAC Incandescent 20A: 120 or 277VAC Ballast 1HP: 120 or 277VAC Motor Load
Plenum rated	Complies with requirements for use in a plenum area Plenum rated for external junction box mounting
Operating environment	Indoor use only Operating temperature: 32° to 104°F (0° to 40°C) Relative humidity (non-condensing): 0% to 95%
Dimensions	3.69" [93.73mm] x 2.33" [59.18mm] x 1.36" [34.54mm]
Weight	15 oz. [425.24 g]
Color	Black
Certifications	UL and cUL listed
Warranty	Five-year limited

Ordering Information

MODEL	
UVPP	Universal Voltage Power Pack
UVPPQTI	Universal Voltage Power Pack with QTI Connector
MPSA	Auxiliary Relay Device
UVPPM	Universal Voltage Power Pack with Manual ON/OFF Control

Date Received: 9/14/2017
Date Reviewed: 10/02/2017

Reviewed by: Scott Miles	**Work Order Number:** 90170-079
Submittal Number: 262726-01	**Contract Number:** CA1435129
Specification Number: 262726	**Project:** Prince Frederick Fire & Life Safety Phase 2
Specification Name: Wiring Devices	**Doc Id:** 20353

The following has been reviewed for general arrangement. Any approval is subject to compliance with all contract requirements. Detailed dimensions and quantities have not been checked.

Comments and Actions

ITEM	DESCRIPTION/COMMENT	ACTION
Receptacles	Provide type BR20W.	AN
GFCI receptacles	Provide type 2095TRWRW Exterior location requires in use weather proof cover not submitted.	AN
Light switches	Provide type CS20AC3-W	AN
Wall plates	Provide white thermoset type for all applications	AN

Action Codes:

A– Approved	**AN** – Approved as noted
ANR – Approved as noted; return record copy	**RR** – Revise and resubmit
REJ – Rejected	**RA** – Receipt acknowledged

General Contractor: *Contact Name* Sue E. Davis *Firm Name* S E Davis Construction, LLC *Address* P.O. Box 1008, La Plata, MD 20646 *Telephone* 301-870-2400 *Email Address* sue@sedavisconstruction.com	*Contractor:* *Contact Name* Ryan Schneider *Firm Name* Line Load Electrical Contractors *Address* 27 Henry Ford Circle, Waldorf, MD 20602 *Telephone* 301-932-4033 *Email Address* ryan@lineload.net	*Contact Name* Ryan James *Firm Name* State Highway Administration *Address* 138 Defense Highway, Annapolis, MD 21401 *Telephone* 443-532-5824 *Email Address* rjames@sha.state.md.us

GC Submittal №:	CA1435129-262726
Subcontractor:	Line Load Electrical Contractors
Supplier(s):	
Specification №/Dwg. Reference:	262726
Section Title:	Wiring Devices
Submittal Description/Items Submitted:	Commercial Specification Grade Receptacles
	Switches Commercial Grade
	Wall Plates
	Toggle Switch Openings
	Duplex Receptacle and Decorator Openings Weather Resistent GFCI Receptacles

General Contractor's Stamp	*Architect's Stamp*
Engineer's Stamp	

Straight Blade Receptacles
Commercial Specification Grade Receptacles

15 & 20A, 125V

Pass & Seymour

legrand

Features

- Corrosion-resistant, plated steel strap locked in to face and back body to resist pulling away from face/body assembly.
- .032 inch thick, brass, triple-wipe power contacts for lasting retention.
- Easily accessed break-off, line-contact connecting tab for fast, easy split-circuit wiring.
- Impact-resistant nylon face and thermoplastic back body.
- CR Series: #14 – #10 AWG solid side wire only. BR Series: side and internal screw-pressure-plate back wire capable of accepting #14 – #10 AWG solid or stranded copper or copper-clad wire.
- Terminal compartments isolated from each other for positive conductor containment.
- Tri-drive terminal and mounting screws.
- Auto-ground clip assures positive ground.

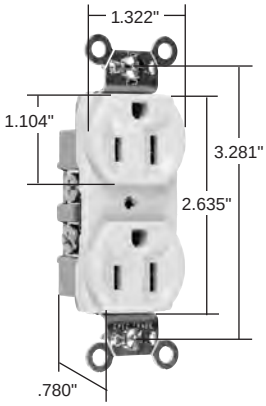

CR15I

Catalog Number	Rating A.	V.	Color	NEMA Config. No.	3rd Party Compliance UL498	C22.2 No. 42
Duplex Receptacles Side Wire						
CR15I	15	125	Ivory	5-15R	•	•
CR15W	15	125	White	5-15R	•	•
CR15	15	125	Brown	5-15R	•	•
CR15GRY	15	125	Gray	5-15R	•	•
CR15LA	15	125	Light Almond	5-15R	•	•
CR20I	20	125	Ivory	5-20R	•	•
CR20W	20	125	White	5-20R	•	•
CR20	20	125	Brown	5-20R	•	•
CR20GRY	20	125	Gray	5-20R	•	•
CR20BK	20	125	Black	5-20R	•	•
NEW **CR20RED**	20	125	Red	5-20R	•	•
CR20LA	20	125	Light Almond	5-20R	•	•
Duplex Receptacles Back & Side Wire						
BR15I	15	125	Ivory	5-15R	•	•
BR15W	15	125	White	5-15R	•	•
BR15	15	125	Brown	5-15R	•	•
BR15GRY	15	125	Gray	5-15R	•	•
BR15LA	15	125	Light Almond	5-15R	•	•
BR20I	20	125	Ivory	5-20R	•	•
BR20W	20	125	White	5-20R	•	•
BR20	20	125	Brown	5-20R	•	•
BR20GRY	20	125	Gray	5-20R	•	•
NEW **BR20BK**	20	125	Black	5-20R	•	•
BR20LA	20	125	Light Almond	5-20R	•	•

2 Pole, 3 Wire

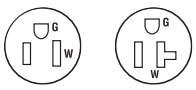

NEMA 5-15R NEMA 5-20R

For Configurable Solutions, see Page U-1.

All devices listed on this page conform to NEMA WD-1 and WD-6.

Switches
Commercial Grade
15 & 20A, 120/277VAC

CS15AC1, CS15AC3, CS20AC1, CS20AC3

Commercial ruggedness in traditional side wire switches.

Like our other commercial switches, these reliable performers feature high-strength polycarbonate toggles, single-piece brass alloy contact arms, nylon covers and heavy-gauge steel straps to withstand hard use and ensure a long service life. Fast make and positive break action minimizes arcing.

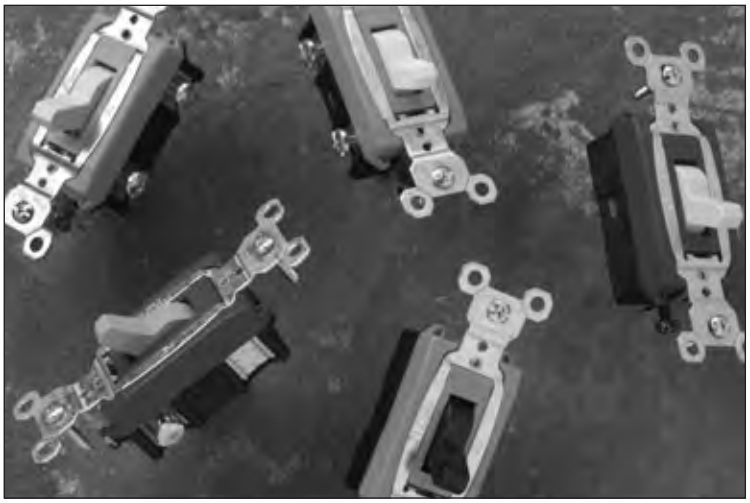

Features & Benefits

One-piece plated steel strap for corrosion-resistance.

Heavy-duty bumpers for quiet, smooth operation.

Oversized silver-alloy contacts for long life and better heat dissipation.

Heavy-duty, brass alloy, one-piece contact arm virtually eliminates contact bounce.

Shallow design for easier installation.

CS20AC1-LA

Glass-reinforced nylon back body for durability and strength.

Cam control and spring actuator for positive "makes and breaks" with a minimum of arcing.

Locking support provides resistance to face and back body separation.

Side wire with #14 – #10 AWG copper or copper-clad wire.

Field Uses/Vertical Markets

- Retail
- Office
- Hospitality/Lodging
- Multiple Dwelling

Switches
Commercial Grade
15 & 20A, 120/277VAC

Ordering Information

Catalog Number		Rating		
Single Pole	Three-Way	A.	VAC	Color
Toggle Switches Side Wire				
CS15AC1-I	CS15AC3-I	15	120/277	Ivory
CS15AC1-W	CS15AC3-W	15	120/277	White
CS15AC1	CS15AC3	15	120/277	Brown
CS15AC1-GRY	CS15AC3-GRY	15	120/277	Gray
CS15AC1-LA	CS15AC3-LA	15	120/277	Light Almond
CS20AC1-I	CS20AC3-I	20	120/277	Ivory
CS20AC1-W	CS20AC3-W	20	120/277	White
CS20AC1	CS20AC3	20	120/277	Brown
CS20AC1-GRY	CS20AC3-GRY	20	120/277	Gray
CS20AC1-LA	CS20AC3-LA	20	120/277	Light Almond

For more information on these and other P&S products refer to our Catalog or visit our web site.

Switches
Commercial Grade
15 & 20A, 120/277VAC

legrand®
Pass & Seymour

Technical Specifications

3rd Party Compliance

UL Listed, File Number E140597, Standard UL20, General Use Snap Switches.
Federal Specification WS896.
cULus Listed, File Number LR17446, Standard CSA-C22.2 No. 111, General Use Snap Switches.
Conforms to NEMA WD-1 and WD-6.

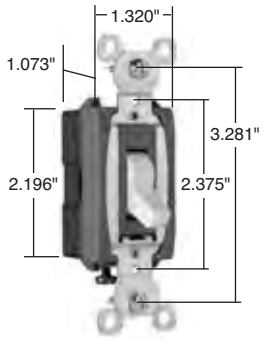

Dimensions for 15 & 20 Amp

Performance

Electrical	
Dielectric Withstand Voltage	1500V Minimum
Maximum Working Voltage	277VAC
Overload	Minimum 4.8 times rated current for 100 cycles
Temperature Rise	30°C maximum at rated current
Maximum Continuous Current	277VAC
Endurance	50,000 cycles minimum, resistive, inductive, tungsten filament lamp load (Fed Spec)
Mechanical	
Terminal Accommodations	#14 AWG – #10 AWG
Environmental	
Flammability	UL94 V2
Operating Temperature	Maximum continuous +115°C, minimum -40°C

Materials

Back Body	Glass-Reinforced Nylon	Contacts	Silver Cadmium Oxide
Front Body	Nylon	Spring Arm	Brass
Toggle	Thermoplastic Polycarbonate	Bumper	Rubber
Terminals	Brass	Spring	Zinc-Plated Steel
Terminal Screws	Tri-Drive Brass-Plated Steel	Ground Terminal	Brass
Strap	Plated Steel	Ground Screw	Tri-Drive Zinc-Plated Steel

15 Amp Cover	Blue
20 Amp Cover	Red

Warranty

1 Year

Pass & Seymour
legrand

Wall Plates
Specifications

Thermoset
SP Series

Application

Pass & Seymour/Legrand's broad line of Standard Size Plastic and Metal Wall Plates features the most complete range of types, sizes, colors, and finishes available. Choose from more than 1,900 standard plates in non-combustible thermoset plastic material, self-extinguishing nylon material, screwless polycarbonate material, or attractively finished metal, for residential, commercial, institutional, and industrial applications. All plastic wall plates color match to Pass & Seymour/Legrand devices.

Thermoset Plastic Wall Plates Features

- Molded of non-combustible mar-proof material.
- Available in "SP" series in Standard, Junior-Jumbo, and Jumbo sizes.
- Seven standard colors available – Ivory, White, Brown, Gray, Black, Red, and Light Almond.
- Individually wrapped with color-matching screws.
- Resistant to discoloration, grease, oil, solvent and moisture.
- Nominal thickness, .070"

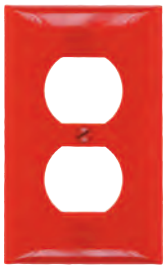

Nylon
TP Series

TradeMaster® Thermoplastic Wall Plates Features

- Molded of rugged, practically indestructible self-extinguishing nylon. ("TP" series only.)
- Available in "TP" series, extra 3/16" width and height than Standard size plates; and "TPJ" series, extra 3/16" width and height than Junior-Jumbo size plates.
- Available in Ivory, White, Brown, Gray, Black, Blue, Orange, Red, and Light Almond.
- Preferred for hospital, industrial, institutional, and other high-abuse applications.
- Nominal thickness, .070"

Screwless
Polycarbonate
SWP & SW Series

Screwless Polycarbonate Wall Plates Features

- Molded of .065" thick polycarbonate with matte finish.
- 2-piece plastic subplate made of polycarbonate ("SWP" Series only).
- Metal subplate made of .042" zinc-plated steel ("SW" Series only).
- Extra 1/8" width and height than Standard size plates.
- Available in Ivory, White, Brown, Gray, Black, and Light Almond.
- Oversized opening to accommodate all NEMA 26 decorator-style openings.

Metal Wall Plates Features

- Constructed of corrosion-resistant stainless steel, brass, aluminum, chrome, brushed bronze or galvanized steel.
- Standard, Jumbo, and Tandem size plates available, as well as special Panel size plates up to 5-gangs high and 10-gangs wide.
- Packaged in protective film, with finish-matching screws.
- Variety of special plated finishes. Paintable to match plastic plates.
- Can be silk-screened or engraved, and custom punched with over 300 opening styles.

Materials

- Type 302 Stainless Steel, non-magnetic, .032" nominal thickness, brushed finish. This alloy contains 18% chromium and 8% nickel for superior resistance to corrosion. Recommended for use in food processing plants, dairies, chemical plants, and other industrial, institutional, and commercial applications where corrosive atmospheres exist.
- Type 430 Stainless Steel, magnetic, .032" nominal thickness, brushed finish. Less corrosion-resistant than Type 302, but ideal for general service in high abuse applications in industrial plants, commercial, and institutional buildings.
- Chrome, Brushed and Polished Brass, .040" thick. 70% copper, 30% zinc alloy gives warm, appealing finish to modern decor as well as retrofit applications. Lacquered to prevent corrosion.
- Aluminum, .040" thick. Lustrous satin finish. Lacquered to prevent corrosion.
- Galvanized Steel. Used only for Handy Box Plates.
- Brushed Bronze, .040" thick. 90% copper, 10% zinc. Lacquered to prevent corrosion.

302
Stainless Steel

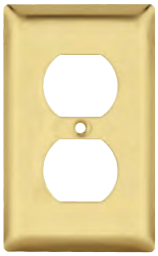

Polished Brass

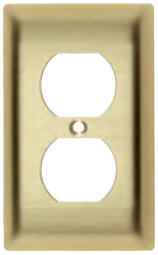

Brushed Brass

Aluminum

Standard Size Wall Plates

- Standard size wall plates for all applications.
- Best fit for surface mount boxes.
- Available in plastic and metal only.

Dimensions

1 gang	2.75" x 4.5"	**4 gang**	8.125" x 4.5"	**7 gang**	13.62" x 4.5"
2 gang	4.56" x 4.5"	**5 gang**	10" x 4.5"	**8 gang**	15.44" x 4.5"
3 gang	6.375" x 4.5"	**6 gang**	11.812" x 4.5"		

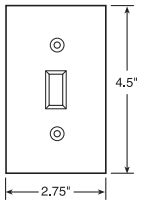

STANDARD

TradeMaster® Wall Plates

- Extra 3/16" width and height than Standard size wall plates.
- Provide better sheet rock coverage with standard size appearance.
- Available in unbreakable nylon 6 construction only.
- Screws pre-installed in the duplex, toggle, and decorator single gang plates.

Dimensions

1 gang	2.9375" x 4.6875"	**3 gang**	6.563" x 4.6875"	**5 gang**	10.188" x 4.6875"
2 gang	4.75" x 4.6875"	**4 gang**	8.375" x 4.6875"	**6 gang**	12" x 4.6875"

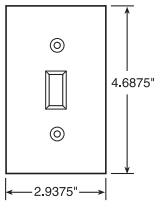

TRADEMASTER STANDARD

Screwless Polycarbonate Wall Plates

- Extra 1/8" width and height than Standard size wall plates.
- Provide better sheet rock coverage with standard size appearance.
- Molded of .065" thick polycarbonate.
- 2-piece plastic subplate made of polycarbonate ("SWP" Series only).
- Metal subplate made of .042" zinc-plated steel ("SW" Series only).
- Available in 5 metallic and 3 wood finishes.
- Oversized opening to accommodate all NEMA 26 decorator-style openings.

Wall Plate Dimensions

1 gang	3.10" x 4.87"	**3 gang**	6.724" x 4.87"	**5 gang**	10.348" x 4.87"
2 gang	4.912" x 4.87"	**4 gang**	8.536" x 4.87"	**6 gang**	12.16" x 4.87"

Subplate Dimensions

1 gang	2.85" x 4.62"	**3 gang**	6.474" x 4.62"	**5 gang**	10.098" x 4.62"
2 gang	4.662" x 4.62"	**4 gang**	8.286" x 4.62"	**6 gang**	11.910" x 4.62"

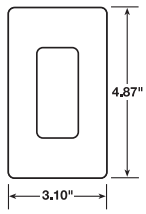

SCREWLESS

Junior-Jumbo Wall Plates

- Extra 3/8" width and height than Standard size wall plates.
- Additional coverage for sheet rock gaps.
- Available in plastic and metal only.

Dimensions

1 gang	3.125" x 4.87"	**3 gang**	6.75" x 4.87"
2 gang	4.93" x 4.87"	**4 gang**	8.56" x 4.87"

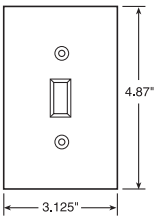

JUNIOR-JUMBO

TradeMaster Jumbo Wall Plates

- Extra 3/16" width and height than Junior-Jumbo size wall plates.
- Provide additional coverage for sheet rock gaps, matching the appearance of the TradeMaster Plates.
- Available in unbreakable nylon 6 construction only.
- Screws pre-installed in the duplex, toggle, and decorator single gang plates.

Dimensions

1 gang	3.3125" x 5.0625"	**3 gang**	6.9375" x 5.0625"
2 gang	5.125" x 5.0625"	**4 gang**	8.75" x 5.0625"

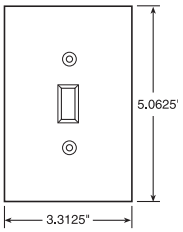

TRADEMASTER JUMBO

Jumbo Wall Plates

- Extra 3/4" width and height than Standard size wall plates.
- Largest size wall plates to cover larger wall damage.
- Available in plastic and metal only.

Dimensions

1 gang	3.5" x 5.25"	**3 gang**	7.12" x 5.25"
2 gang	5.31" x 5.25"	**4 gang**	8.93" x 5.25"

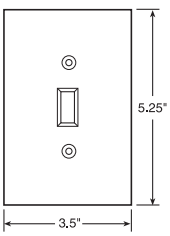

JUMBO

Pass & Seymour

legrand

Wall Plates
Dimensions

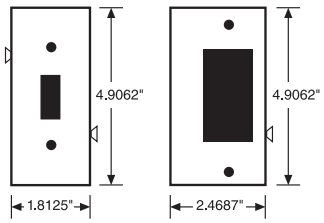

CENTER PANEL

END PANEL

Sectional Wall Plates Features

- End and center panels with each of five most-used configurations make it possible to improvise custom wall plates on the job. Panels lock securely together on installation. Blank sections furnished with mounting strap.

Wall Plate Mountings

Illustrated are the five standard methods of plate mounting. There are many other non-standard methods which depend upon the special device used. Exact mounting hole specifications for every device appear in the Selector Guide.

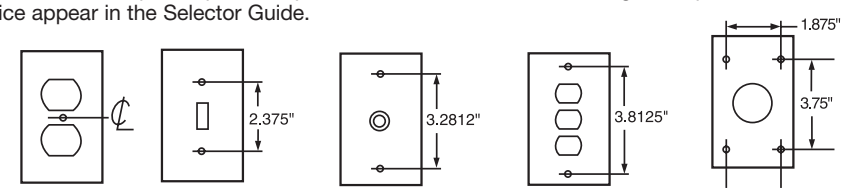

Center | Strap | Box | Decorator and Interchangeable | FS (4 Screw)

Wall Plate Sizes

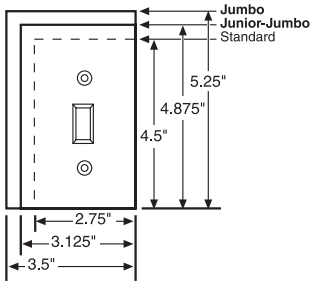

SP Plates

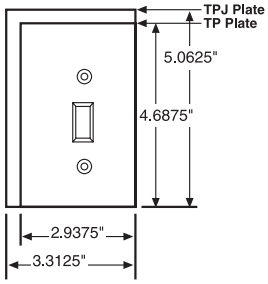

TP Plates

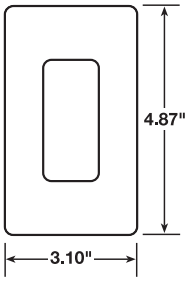

SW Plates

Standard Size
Available in plastic and metal

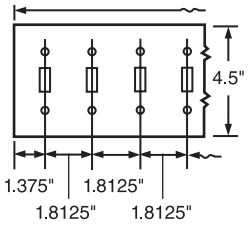

Junior-Jumbo

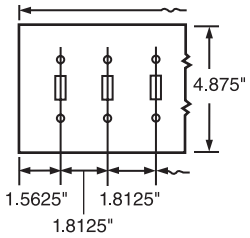

Jumbo

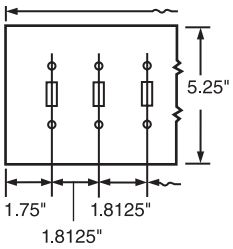

TradeMaster® Size
Available in nylon only

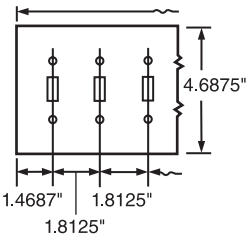

TradeMaster Jumbo
Available in nylon only

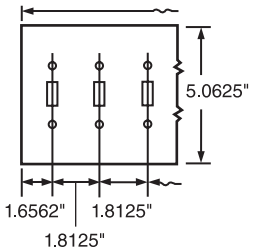

Tandem Wall Plates

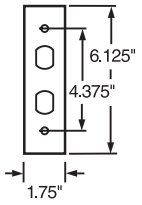

Metal only. Plate mounting dimensions are non-standard. Refer to Page S-25 for details and devices that can be used.

Screwless Wall Plate Metal Subplate

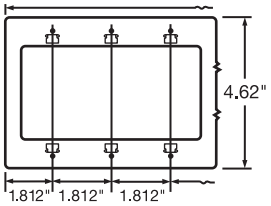

For Screwless Wall Plate dimensions refer to Page S-3.

Screwless Wall Plate Plastic Subplate

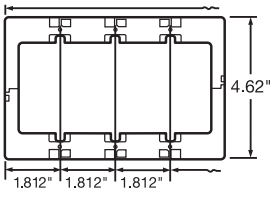

Wall Plates
Toggle Switch Openings
Standard Size Plastic & Metal

Pass & Seymour
legrand

Description	Color	Nylon TradeMaster® Plates	Thermoset Smooth	Metal Material	Metal Smooth
Toggle Switch Openings					
One Gang	Ivory	TP1I	SP1I	Aluminum	SA1
	White	TP1W	SP1W	Brass	SB1
	Brown	TP1	SP1	Polished Brass	SB1PB
	Gray	TP1GRY	SP1GRY	430S/S	SL1
	Black	TP1BK		302S/S	SS1
	Red	TP1RED		Brushed Bronze	SB1BZ
	Light Almond	TP1LA	SP1LA	Chrome	SB1CH
Two Gang	Ivory	TP2I	SP2I	Aluminum	SA2
	White	TP2W	SP2W	Brass	SB2
	Brown	TP2	SP2	Polished Brass	SB2PB
	Gray	TP2GRY	SP2GRY	430S/S	SL2
	Black	TP2BK		302S/S	SS2
	Red	TP2RED		Brushed Bronze	SB2BZ
	Light Almond	TP2LA	SP2LA	Chrome	SB2CH
Three Gang 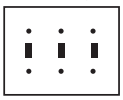	Ivory	TP3I	SP3I	Aluminum	SA3
	White	TP3W	SP3W	Brass	SB3
	Brown	TP3	SP3	Polished Brass	SB3PB
	Gray	TP3GRY	SP3GRY	430S/S	SL3
	Black	TP3BK		302S/S	SS3
	Red	TP3RED		Brushed Bronze	SB3BZ
	Light Almond	TP3LA	SP3LA	Chrome	SB3CH
Four Gang 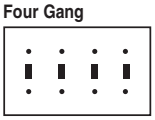	Ivory	TP4I	SP4I	Aluminum	SA4
	White	TP4W	SP4W	Brass	SB4
	Brown	TP4	SP4	Polished Brass	SB4PB
	Gray	TP4GRY	SP4GRY	430S/S	SL4
	Black	TP4BK		302S/S	SS4
	Red	TP4RED			
	Light Almond	TP4LA	SP4LA		
Five Gang 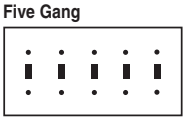	Ivory	TP5I	SP5I		
	White	TP5W	SP5W	Brass	SB5
	Brown	TP5	SP5	Polished Brass	SB5PB
	Gray	TP5GRY	SP5GRY		
	Black	TP5BK		302S/S	SS5
	Light Almond	TP5LA	SP5LA		
Six Gang 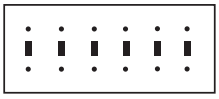	Ivory	TP6I	SP6I		
	White	TP6W	SP6W	Polished Brass	SB6PB
	Brown	TP6			
	Gray	TP6GRY	SP6GRY	302S/S	SS6
	Black	TP6BK			
	Light Almond	TP6LA	SP6LA		
Seven Gang				302S/S	SS601
				302S/S Painted Ivory	SS601I
				302S/S Painted White	SS601W
Eight Gang 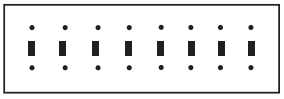				302S/S	SS602
				302S/S Painted Ivory	SS602I
				302S/S Painted White	SS602W

These products listed to UL514, Cover Plates for Flush-Mounted Wiring Devices, CSA Certified.

Pass & Seymour
legrand

Wall Plates
Duplex Receptacle & Decorator Openings
Standard Size Plastic & Metal

Description	Color	Nylon TradeMaster® Plates	Thermoset Smooth	Metal Material	Metal Smooth
Duplex Receptacle Openings					
One Gang	Ivory	TP8I	SP8I		
	White	TP8W	SP8W	Aluminum	SA8
	Brown	TP8	SP8	Brass	SB8
	Gray	TP8GRY	SP8GRY	Polished Brass	SB8PB
	Black	TP8BK		430S/S	SL8
	Red	TP8RED		302S/S	SS8
	Light Almond	TP8LA	SP8LA	Brushed Bronze	SB8BZ
	Blue	TP8BL		Chrome	SB8CH
	Orange	TP8OR			
Two Gang	Ivory	TP82I	SP82I		
	White	TP82W	SP82W	Aluminum	SA82
	Brown	TP82	SP82	Brass	SB82
	Gray	TP82GRY	SP82GRY	Polished Brass	SB82PB
	Black	TP82BK		430S/S	SL82
	Red	TP82RED		302S/S	SS82
	Light Almond	TP82LA	SP82LA	Brushed Bronze	SB82BZ
	Orange	TP82OR		Chrome	SB82CH
Three Gang 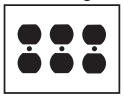	Ivory		SP83I		
	White		SP83W	Brass	SB83
	Brown		SP83	Polished Brass	SB83PB
	Gray		SP83GRY		
	Light Almond		SP83LA	302S/S	SS83
Four Gang 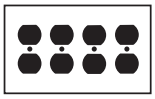	Ivory		SP84I		
	White		SP84W	Polished Brass	SB84PB
	Brown		SP84		
	Gray		SP84GRY	302S/S	SS84
Five Gang				302S/S	SS85
Six Gang				302S/S	SS86
Decorator Openings					
One Gang	Ivory	TP26I	SP26I		
	White	TP26W	SP26W	Aluminum	SA26
	Brown	TP26	SP26	Brass	SB26
	Gray	TP26GRY	SP26GRY	Polished Brass	SB26PB
	Black	TP26BK	SP26BK	430S/S	SL26
	Red	TP26RED		302S/S	SS26
	Light Almond	TP26LA	SP26LA	Brushed Bronze	SB26BZ
	Blue	TP26BL		Chrome	SB26CH
	Orange	TP26OR			

These products listed to UL514, Cover Plates for Flush-Mounted Wiring Devices, CSA Certified.

Description	Color	Nylon TradeMaster® Plates	Thermoset Smooth	Metal Material	Metal Smooth
Decorator Openings					
Two Gang	Ivory	**TP262I**	**SP262I**		
	White	**TP262W**	**SP262W**	Aluminum	**SA262**
	Brown	**TP262**	**SP262**	Brass	**SB262**
	Gray	**TP262GRY**	**SP262GRY**	Polished Brass	**SB262PB**
	Black	**TP262BK**	**SP262BK**	430S/S	**SL262**
	Red	**TP262RED**		302S/S	**SS262**
	Light Almond	**TP262LA**	**SP262LA**		
	Blue	**TP262BL**			
	Orange	**TP262OR**			
Three Gang 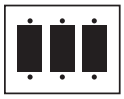	Ivory	**TP263I**	**SP263I**		
	White	**TP263W**	**SP263W**	Brass	**SB263**
	Brown	**TP263**		Polished Brass	**SB263PB**
	Gray	**TP263GRY**	**SP263GRY**		
	Black	**TP263BK**	**SP263BK**	302S/S	**SS263**
	Red	**TP263RED**			
	Light Almond	**TP263LA**	**SP263LA**		
Four Gang	Ivory	**TP264I**	**SP264I**		
	White	**TP264W**	**SP264W**	Brass	**SB264**
	Brown	**TP264**	**SP264**	Polished Brass	**SB264PB**
	Gray	**TP264GRY**	**SP264GRY**		
	Black	**TP264BK**	**SP264BK**	302S/S	**SS264**
	Red	**TP264RED**			
	Light Almond	**TP264LA**	**SP264LA**		
Five Gang 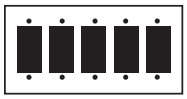	Ivory	**TP265I**	**SP265I**		
	White	**TP265W**	**SP265W**		
	Brown	**TP265**		302S/S	**SS265**
	Gray	**TP265GRY**	**SP265GRY**		
	Black	**TP265BK**	**SP265BK**		
	Red		**SP265RED**		
	Light Almond	**TP265LA**	**SP265LA**		
Six Gang 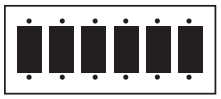	Ivory	**TP266I**	**SP266I**		
	White	**TP266W**	**SP266W**		
	Brown	**TP266**	**SP266**	302S/S	**SS266**
	Gray	**TP266GRY**	**SP266GRY**		
	Black	**TP266BK**	**SP266BK**		
	Light Almond	**TP266LA**	**SP266LA**		
Seven Gang 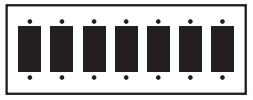				302S/S	**SS267**
				302S/S Painted Ivory	**SS267I**
				302S/S Painted White	**SS267W**
Eight Gang 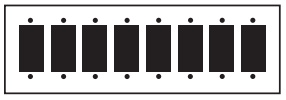				302S/S	**SS268**
				302S/S Painted Ivory	**SS268I**
				302S/S Painted White	**SS268W**

These products listed to UL514, Cover Plates for Flush-Mounted Wiring Devices, CSA Certified.

Weather-Resistant GFCI Receptacles

2 Pole, 3 Wire Grounding 15 & 20A, 125VAC

Pass & Seymour

legrand

Features

- Weather-Resistant: Meets 2008 National Electrical Code® Weather-Resistant requirements.
- Tamper-Resistant: Meets 2008 National Electrical Code® Tamper-Resistant requirements.
- Protects children: patented shutter system helps prevent improper insertion of foreign objects.
- Listed to the Weather-Resistant supplement of UL498, meeting demanding UL requirements including:
  - Ultraviolet light exposure test
  - Cold impact test
  - Accelerated aging test
  - Stringent material requirements for current-carrying parts, wire binding screws and mounting straps to ensure superior corrosion resistance.
- SafeLock™ Protection: if critical components are damaged and ground fault protection is lost, power to receptacle is disconnected.
- Prevents line-load reversal miswire: no power to the face or downstream receptacles if wired incorrectly.
- Exceeds UL943 voltage surge requirements; survives 100x the required UL 3kA/6kV voltage surge test cycles.
- FSUL Listed (Federal Specification WC596).
- Trip indicator light (red LED).
- Side or internal screw-pressure-plate back wire with #10 – #14 AWG solid or stranded copper wire.
- Two back wire holes per terminal.
- Ground screw has a back wire clamp for easy installation.
- 1/4" thinner than competitors' GFCIs; leaves more room for wires in the box.
- Mounting screws are shipped captive in the device and wall plate for easier installation.
- High-impact-resistant thermoplastic construction.
- Extra-long nickel post-plated steel mounting strap.
- Button colors match the device face.
- Dual-direction test and reset buttons.
- Class A rated GFCI.
- Supplied with matching TP26 nylon wall plate.
- Tri-drive screws.

Specifications

- Supply Voltage: 125VAC, 60 Hz
- Supply Voltage Range: 102-132 VAC
- Trip Threshold: 5± 1mA
- Trip Time: 0.025 sec., nominal per UL Standard
- 20 Amp feed-thru capacity

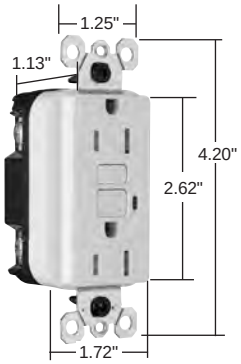

1595TRWRW

2095TRWRW

Catalog Number	Rating A.	VAC	Color	NEMA Config. No.	3rd Party Compliance: UL943 C22.2 No. 144	UL498 C22.2 No. 42	FSUL WC596
NEW TradeMaster®/Spec Grade Weather-Resistant 15 Amp Duplex GFCI							
1595TRWRI	15	125	Ivory	5-15R	•	•	•
1595TRWRW	15	125	White	5-15R	•	•	•
1595TRWR	15	125	Brown	5-15R	•	•	•
1595TRWRLA	15	125	Light Almond	5-15R	•	•	•
NEW Specification Grade Weather-Resistant 20 Amp Duplex GFCI							
2095TRWRI	20	125	Ivory	5-20R	•	•	•
2095TRWRW	20	125	White	5-20R	•	•	•
2095TRWR	20	125	Brown	5-20R	•	•	•
2095TRWRGRY	20	125	Gray	5-20R	•	•	•
2095TRWRLA	20	125	Light Almond	5-20R	•	•	•

NEMA 5-15R

NEMA 5-20R

For Configurable Solutions, see Page U-1.

2008 National Electrical Code® Section 406.8 Receptacles in Wet or Damp Locations.

Requires that all 15- and 20-amp, 125- and 250-volt non-locking receptacles installed in wet or damp locations shall be weather-resistant receptacles.

All devices listed on this page conform to NEMA WD-1 and WD-6.

Date Received: 8/4/2017
Date Reviewed: 8/18/2017

Reviewed by: IL KIM	**Work Order Number:** 90170-079
Submittal Number: 026410-01	**Contract Number:** CA1435129
Specification Number: 026410	**Project:** Prince Frederick Fire & Life Safety Phase 2
Specification Name: Electrical - Panelboards and Gear	**Doc Id:** 19466

The following has been reviewed for general arrangement. Any approval is subject to compliance with all contract requirements. Detailed dimensions and quantities have not been checked.

Comments and Actions

ITEM	DESCRIPTION/COMMENT	ACTION
Panel P5	Provide separate main circuit breaker and 28 20A/1P circuit breakers.	AN
Enclosed CB		A
Safety Switches		A

Action Codes:

A– Approved	**AN** – Approved as noted
ANR – Approved as noted; return record copy	**RR** – Revise and resubmit
REJ – Rejected	**RA** – Receipt acknowledged

General Contractor: *Contact Name* Sue E. Davis *Firm Name* S E Davis Construction, LLC *Address* P.O. Box 1008, La Plata, MD 20646 *Telephone* 301-870-2400 *Email Address* sue@sedavisconstruction.com	*Contractor:* *Contact Name* Ryan *Firm Name* Line-Load Electrical Contractors, Inc. *Address* 27 Henry Ford Circle, Waldorf, MD 20602 *Telephone* 301-932-4033 *Email Address* ryan@lineload.net	*Contact Name* Ryan James *Firm Name* State Highway Administration *Address* 138 Defense Highway, Annapolis, MD 21401 *Telephone* 443-532-5824 *Email Address* rjames@sha.state.md.us

GC Submittal №:	CA1435129-026410.01
Subcontractor:	Line-Load Electrical Contractors, Inc.
Supplier(s):	
Specification №/Dwg. Reference:	026410
Section Title:	Electrical
Submittal Description/Items Submitted:	Panelboards
	Gear

General Contractor's Stamp	*Architect's Stamp*
Engineer's Stamp	

PROJECT

PRINCE FREDERICK SHA PH2

CONTRACTOR

LINE LOAD ELECTRICAL CONT., INC

27B HENRY FORD CIRCLE
WALDORF, MD 20602

Capital Tristate Electrical Distributor
8511 Pepco Place Upper Marlboro, MD 20772
301-909-6500

Scott Wainer – Switchgear Estimator
scott.wainer@capitaltristate.com
301-909-6508

SECTION 1 : PANELBOARDS
SECTION 2 : ENCLOSED BREAKERS
SECTION 3 : SAFETY SWITCHES

1 **Designation:** PNL P5 NQ430L1C PNLBD INT NQ 100A MLO 30 CKT 3P CU
Consisting of
208Y/120V 3Ph 4W 60Hz SCCR: 10kA Fully Rated
Single Main: 100A/3P QOB Circuit Breaker
Incoming Conductors: 1 - #4 - 2/0 AWG
Bus: Copper: Silver/Tin Plated
CU Ground Bar
30 Circuit Interior
Type 1,Box: 32H x 20W x 5.75D
Incoming: Top Trim: Flush - Hinged
Box Cat No: MH32 Front Cat No: NC32FHR
Ref. Drawing: PBA703HR
Feeders:
1 - 15A/2P QOB
25 - 20A/1P QOB
Optional Features:
Standard Panel (Box Ahead),Copper Solid Neutral, Copper Ground Bar

REV	DESCRIPTION	BY	DATE	–	----	--	--/--/--
–	----	--	--/--/--	–	----	--	--/--/--

CKT NO	ACCESSORIES	TYPE	RATING AMP/P	S/N
1		QOB	15/2	
3				
5		QOB	20/1	
7		QOB	20/1	
9		QOB	20/1	
11		QOB	20/1	
13		QOB	20/1	
15		QOB	20/1	
17		QOB	20/1	
19		QOB	20/1	
21		QOB	20/1	
23		QOB	20/1	
25		QOB	20/1	
27		QOB	20/1	
29		QOB	20/1	

A B C

S/N	RATING AMP/P	TYPE	ACCESSORIES	CKT NO
	100/3	QOB	BRANCH MOUNTED MAIN	2
				4
				6
	20/1	QOB		8
	20/1	QOB		10
	20/1	QOB		12
	20/1	QOB		14
	20/1	QOB		16
	20/1	QOB		18
	20/1	QOB		20
	20/1	QOB		22
	20/1	QOB		24
	20/1	QOB		26
	20/1	QOB		28
	20/1	QOB		30

PHYSICAL DATA

ENCLOSURE Type 1
Flush – Hinged
FRONT CAT#: NC32FHR
BOX CAT#: MH32
DIMENSIONS:
32''H x 20''W x 5.75''D
WIRE BENDING SPACE:
TOP – 9.6
BOTTOM – 3.25
SIDE – 6.13
PBA: 703HR
BUSSING: Copper
Silver/Tin Plated
OPTIONAL FEATURES:
Copper GROUND BAR
COPPER SOLID NEUTRAL

ELECTRICAL DATA

SYSTEM: 208Y/120V 3Ph 4W 60Hz
System Ampacity: 100A
10kA SYMS. SCCR
MAIN: MAIN BREAKER QOB 100A
Top FEED
10kA AIR
INCOMING CONDUCTORS(S) PER NEC
Wire Bending Space:
#4 – 2/0 AWG

----------BRANCH SUMMATION----------

1 – 15A/2P QOB
25 – 20A/1P QOB

JOB NAME:	PRINCE FREDERICK SHA PH2	EQUIPMENT DESIGNATION:	PNL P5
JOB LOCATION:	PRINCE FREDERICK MD	EQUIPMENT TYPE:	NQ (Circuit Breaker Type) PANEL 1 OF 1
DRAWN BY:	(Q2C)	DRAWING TYPE:	ONE LINE DIAGRAM
ENGR:			SQUARE D by Schneider Electric
DATE:	July 24 2017		
DRAWING STATUS:	QUOTE	DWG# 040213109-01	PG 1 OF 1 REV –

NQ Lighting Panelboards

Developed with electrical contractor input, the NQ family of lighting and appliance panelboards sets new standards for ease of installation and durability. Plus, new design innovations increase the availablity of these panelboards by offering complete ready to install products.

Features

- 240Vac, 48Vdc maximum
- 600A maximum main circuit breakers or main lugs
- 150A maximum branch circuit breakers
- 10,000A through 200,000A SCCR
- Both fully rated and series rated systems are available
- Interiors are field convertible to top or bottom feed
- Interiors are available in plated copper or aluminum bus
- Interiors accept both bolt-on and plug-on branch circuit breakers
- Complete line of UL/cUL listed interiors with 200% rated neutrals for non-linear loads
- Suitable for use as service entrance equipment
- 20" wide trims and boxes common for NQ and NF panelboards
- Mono-flat® or hinged trims

Factory Options

- 1P3W or 3P4W – 600A main lugs and main breaker panelboards
- Sub-feed and thru-feed lugs
- Sub-feed circuit breakers
- Optional 200% rated neutrals up to 400A
- Split bus bars
- TVSS
  - 100,000A – 240,000A surge current rating
  - All voltage systems
- Lighting contactors
- Customer equipment space

"Ready-to-Install" Panels and Kits Available from Stock

- 100A – 600A MLO 1P3W and 3P4W Interiors
- NEMA 1 and 3R/12 enclosures
- 100A – 400A main circuit breaker kits
- TVSS interiors
  - 120,000A or 160,000A surge current ratings
- 100A – 400A sub-feed and thru-feed lugs
- Sub-feed circuit breaker kits
  - 1 – 225A sub-feed circuit breaker per 225A panelboard
  - 2 – 225A sub-feed circuit breakers per 400A panelboard
- 200% neutral kits up to 400A
- Copper neutrals and equipment ground bars

QO Miniature Circuit Breakers

QO™ Circuit Breakers

Circuit Breaker Type	Plug-on	QO			QO-H	QO-VH					QH		QOT	QO-CAFI	QO-VHCAFI	QO-DF	QOVH-DF
	Bolt-on	QOB			QOB-H	—	—	—	QOB-VH		QHB		—	QOB-CAFI	QOB-VHCAFI	QOB-DF	QOB-VHDF
	Unit Mount	—			—	—	—	—	—	—	—	—	—	—	—	—	—
Number of Poles		1	2	3	2	1	2	3	1	2, 3 [1]	1,2	3	1	1, 2	1, 2	1	1
Current Range (A)		10–70	10–200 [2]	10–100	15–100	15–70	15–125	15–100	15–70	15–150	15–30	15–30	15–30	15–20	15–20	15–20	15–20
Interrupting Ratings																	
UL/CSA Rating (kA) (50/60 Hz)	120 Vac	10	10	10	10	22	22	22	22	22	65	65	10	10	22	10	22
	120/240 Vac	10	10	10	10	22	22	22	22	22	65	65	10	10	22	—	—
	208Y/120	—	—	—	—	—	—	—	—	—	—	—	—	—	—	—	—
	240 Vac [3]	—	—	10	10	—	—	22	—	22 [4]	—	65	—	—	—	—	—
	277 Vac	—	—	—	—	—	—	—	—	—	—	—	—	—	—	—	—
	480Y/277 Vac	—	—	—	—	—	—	—	—	—	—	—	—	—	—	—	—
DC Ratings	48 Vdc	5 [5]	5 [5]	5 [5]	—	—	—	—	—	—	—	—	—	—	—	—	—
	60 Vdc	—	—	—	—	—	—	—	—	—	—	—	—	—	—	—	—
	65 Vdc	—	—	—	—	—	—	—	—	—	—	—	—	—	—	—	—
	125 Vdc	—	—	—	—	—	—	—	—	—	—	—	—	—	—	—	—
	250 Vdc	—	—	—	—	—	—	—	—	—	—	—	—	—	—	—	—
	500 Vdc	—	—	—	—	—	—	—	—	—	—	—	—	—	—	—	—
IEC 60947-2 (50/60 Hz) [6]	IEC (Icu)	—	—	—	—	—	—	—	—	—	—	—	—	—	—	—	—
		—	—	—	—	—	—	—	—	—	—	—	—	—	—	—	—
Special Ratings																	
CCC		—	—	—	—	—	—	—	—	—	—	—	—	—	—	—	—
Fed. Specs W-C-375B/GEN		X	—	—	—	X	—	—	—	—	X	—	X	X	—	X	X
Other Standard		HACR [7] NQM			HACR [7]						—	—	—	HACR [7]	—	HACR [7]	HACR [7]
Accessories and Modifications																	
Shunt Trip [8]		X	X	X	X	X	X	X	X	X [9]	X	X	X	—	—	—	—
Undervoltage Trip		—	—	—	—	—	—	—	—	—	—	—	—	—	—	—	—
Auxiliary Switches [8]		X	X	X	X	X	X	X	X	X [9]	X	X	X	—	X	—	—
Alarm Switch [8]		X	X	X	X	X	X	X	X	X [9]	X	X	X	—	X	—	—
Handle Operators		—	—	—	—	—	—	—	—	—	—	—	—	—	—	—	—
Handle Padlock Attachment		X	X	X	X	X	X	X	X	X	X	X	X	X	X	X	X
Trip System Type																	
Thermal-magnetic		X	X	X	X	X	X	X	X	X	X	X	X	X	X	X	X
Molded Case Switch		X	X	X	—	—	—	—	—	—	—	—	—	—	—	—	—
Dimensions (1P Unit Mount)																	
Dimensions (1P Unit Mount) in. (mm)	Height	3.5 (89) [1]												4.75 (121)			
	Width	0.75 (19) [1]															
	Depth	2.92 (74) [1]															
Pages		page 7-11															

[1] For dimensions for QOB2150VH, QOB3110VH, QOB3125VH and QOB3150VH, see page 7-73
[2] 2P 150–200 A requires 4P width.
[3] See the Supplemental Digest, Section 3 for 3Ø corner grounded systems.
[4] 22 kA @ 240 Vac for 3P only.
[5] 1P and 2P, 10–70 A and 3P 10–60 A only.
[6] See the Supplemental Digest Section 10 for circuit breakers with IEC ratings.
[7] HACR on QO, QOB 1P 10–70 A, 2P 15–100 A, 3P 10–100 A; QOB-VH 1P 15–70 A, 2P 15–125 A, 3P 15–100 A.
[8] Factory-installed option only.
[9] Factory-installed accessories are not available on QOB-VH 2P150 A and 3P 110–150 A.

© 2016 Schneider Electric
All Rights Reserved
6/30/2016

1 **Designation:** ECB Q23225NS ENCLOSURE CIRCUIT BREAKER 240V 225A
1 **Designation:** ECB QBL32100 MOLDED CASE CIRCUIT BREAKER 240V 100A
1 **Designation:** ECB PKOGTA2 EQUIP GRD ASSY 240V + 600V 100-200

QBL 2P
70–250 A

QBL 3P
70–250 A

Table 7.44: PowerPact Q-Frame▲250 A Thermal-Magnetic Circuit Breaker (240 Vac)

Ampere Rating	Fixed AC Magnetic Trip		Interrupting Rating B		D		G		J		Terminal Wire Range
	Hold	Trip	Cat. No.	$ Price	Cat. No.	$ Price	Cat. No.	$ Price	Cat. No.	$ Price	
2P, 240 Vac											
70 A	1000 A	1800 A	QBL22070	**474.00**	QDL22070	**1143.00**	QGL22070	**1521.00**	QJL22070	**1890.00**	#4 AWG - 300 kcmil Al/Cu
80 A	1000 A	1800 A	QBL22080	**474.00**	QDL22080	**1143.00**	QGL22080	**1521.00**	QJL22080	**1890.00**	
90 A	1000 A	1800 A	QBL22090	**474.00**	QDL22090	**1143.00**	QGL22090	**1521.00**	QJL22090	**1890.00**	
100 A	1200 A	2400 A	QBL22100	**474.00**	QDL22100	**1143.00**	QGL22100	**1521.00**	QJL22100	**1890.00**	
110 A	1200 A	2400 A	QBL22110	**474.00**	QDL22110	**1143.00**	QGL22110	**1521.00**	QJL22110	**1890.00**	
125 A	1200 A	2400 A	QBL22125	**474.00**	QDL22125	**1143.00**	QGL22125	**1521.00**	QJL22125	**1890.00**	
150 A	1200 A	2400 A	QBL22150	**474.00**	QDL22150	**1143.00**	QGL22150	**1521.00**	QJL22150	**1890.00**	
175 A	1200 A	2400 A	QBL22175	**474.00**	QDL22175	**1143.00**	QGL22175	**1521.00**	QJL22175	**1890.00**	
200 A	1200 A	2400 A	QBL22200	**474.00**	QDL22200	**1143.00**	QGL22200	**1521.00**	QJL22200	**1890.00**	
225 A	1200 A	2400 A	QBL22225	**474.00**	QDL22225	**1143.00**	QGL22225	**1521.00**	QJL22225	**1890.00**	
250 A■	1200 A	2400 A	QBL22250	**693.00**	QDL22250	**1544.00**	QGL22250	**1970.00**	QJL22250	**2348.00**	
3P, 240 Vac											
70 A	1000 A	1800 A	QBL32070	**1248.00**	QDL32070	**1784.00**	QGL32070	**2442.00**	QJL32070	**2796.00**	#4 AWG - 300 kcmil Al/Cu
80 A	1000 A	1800 A	QBL32080	**1248.00**	QDL32080	**1784.00**	QGL32080	**2442.00**	QJL32080	**2796.00**	
90 A	1000 A	1800 A	QBL32090	**1248.00**	QDL32090	**1784.00**	QGL32090	**2442.00**	QJL32090	**2796.00**	
100 A	1200 A	2400 A	QBL32100	**1248.00**	QDL32100	**1784.00**	QGL32100	**2442.00**	QJL32100	**2796.00**	
110 A	1200 A	2400 A	QBL32110	**1248.00**	QDL32110	**1784.00**	QGL32110	**2442.00**	QJL32110	**2796.00**	
125 A	1200 A	2400 A	QBL32125	**1248.00**	QDL32125	**1784.00**	QGL32125	**2442.00**	QJL32125	**2796.00**	
150 A	1200 A	2400 A	QBL32150	**1248.00**	QDL32150	**1784.00**	QGL32150	**2442.00**	QJL32150	**2796.00**	
175 A	1200 A	2400 A	QBL32175	**1248.00**	QDL32175	**1784.00**	QGL32175	**2442.00**	QJL32175	**2796.00**	
200 A	1200 A	2400 A	QBL32200	**1248.00**	QDL32200	**1784.00**	QGL32200	**2442.00**	QJL32200	**2796.00**	
225 A	1200 A	2400 A	QBL32225	**1248.00**	QDL32225	**1784.00**	QGL32225	**2442.00**	QJL32225	**2796.00**	
250 A■	1200 A	2400 A	QBL32250	**1812.00**	QDL32250	**2442.00**	QGL32250	**3150.00**	QJL32250	**3465.00**	

▲ Replacement lugs and electrical accessories are not available for PowerPact Q-frame circuit breakers.
■ 250 A requires the use of copper cables only.

Table 7.45: Q-Frame Termination Options

Termination Letter
A = I-Line (See Section 9)
E = Bolt-on I-Line (See Section 9)
F = No lugs
L = Lugs both ends
M = Lugs ON end, studs on OFF end
P = Lugs OFF end, studs on ON end

For factory-installed termination, place termination letter in the third block of the circuit breaker catalog number.

QGL32200
└Termination Letter

▼ Add TS suffix for studs on both ends without nuts and washers. See Catalog **0734CT0201** for additional information.

Table 7.46: Q-Frame Interrupting Ratings

Voltage	Interrupting Rating B	D	G	J
240 Vac♦	10 kA	25 kA	65 kA	100 kA★

♦ Q-frame circuit breakers are 240 Vac only.
★ 3P QJ circuit breakers are rated at 208Y/120 Vac only.

DimensionsPage 7-55
EnclosuresPage 7-56

© 2012 Schneider Electric
All Rights Reserved

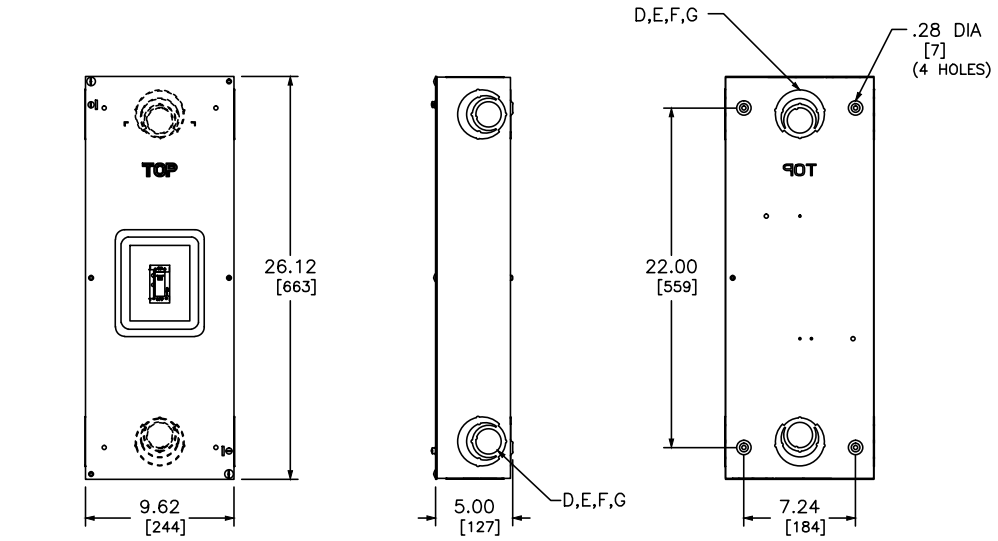

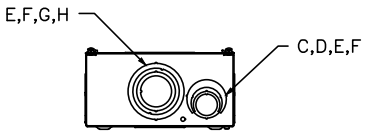

KNOCKOUTS						
SYMBOL	C	D	E	F	G	H
IN	1.00	1.25	1.50	2.00	2.50	3.00
MM	25	32	38	51	64	76

DUAL DIMENSIONS: INCHES / MILLIMETERS

SERVICE	AMPERE RATING	GENERAL PURPOSE NEMA TYPE 1	CIRCUIT BREAKER (ORDER SEPARATELY)			NEUTRAL ASSEMBLY TERMINAL LUG WIRE SIZAE AWG/KCMIL	
			CATALOG NUMBER	UL LISTED INTERRUPTING RATING RMS SYM AMPERES	TERMINAL LUG WIRE SIZE AWG AL/CU	NEUTRAL TERMINALS	GROUNDING TERMINALS ⏚
TWO POLE S N 240VAC	70–225A	Q2–3225NF/S	QBL QDL QGL QJL	10,000 25,000 65,000 100,000	#4–300	#4–300 AL/CU	#12–1/0 AL OR #14–1/0 CU
THREE POLE S N 240VAC	70–225A		QBL QDL QGL QJL	10,000 25,000 65,000 100,000▲			

NOTES:
FINISH – GRAY BAKED ENAMEL ELECTRODEPOSITED OVER CLEANED PHOSPATIZED STEEL.
UL LISTED – FILE E–136861
NEUTRALS – INSULATED GROUNDABLE.
ENCLOSURES WITH "C" SUFFIX IN CATALOG NUMBER HAVE NEUTRAL BONDED TO ENCLOSURE AND INTENDED FOR USE IN CANADA. CSA CERTIFIED – FILE LL–89067
⏚ EQUIPMENT GROUND KIT FACTORY INSTALLED.
SUITABLE FOR USE AS SERVICE ENTRANCE EQUIPMENT.
▲ WHEN INSTALLED IN ENCLOSURES THE MAXIMUM AIR IS 65,000 AT 240V AND 100,000 AT 208V.

CIRCUIT BREAKER ENCLOSURES
70–225A NEMA TYPE 1
GENERAL PURPOSE INDOOR ENCLOSURE

SQUARE D
by Schneider Electric

DWG# NO. 3047

JANUARY 2015

3047

FA100S

FA100RB

FA100DS

- Circuit breaker enclosures are UL Listed, CSA Certified and are suitable for use as service equipment except as footnoted.
- The short circuit rating of an enclosed circuit breaker is equal to the rating of the circuit breaker installed, except as footnoted.
- Circuit breakers are ordered and shipped separately for field installation.
- For enclosure accessories and dimensions refer to page 7-58.
- See Supplemental Digest page 3-35 for NEMA 7 and 9 enclosures for FAL circuit breakers.

Table 7.137: Circuit Breaker Enclosures

Circuit Breaker			Enclosure					
Cat. No. Prefix	Rating	Poles	Cat. No.	$ Price	Cat. No.	$ Price	Cat. No.	$ Price
			NEMA 1 Flush		NEMA 1 Surface		NEMA 3R▲	
FAL, FHL, FCL	15–100 A	1, 2, 3	FA100F	189.00	FA100S	189.00	FA100RB	500.00
QBL, QDL, QGL, QJL	100–200 A	2	—	—	Q22200NS■	176.00	Q22200NRB■	380.00
	100–225 A	2, 3	Q23225NF■	218.00	Q23225NS■	218.00	Q23225NRB■	417.00
HDL, HGL, HJL, HLL	15–150 A	2, 3	J250F♦★▼	285.00	J250S♦★▼	285.00	J250R♦★▼	840.00
JDL, JGL, JJL, JLL	150–250 A	2, 3						
HDL	15–100 A	3	—	—	HD100S△□♦▼☆	285.00	—	—
JDL	150–250 A	3	—	—	JD250S☆□△♦▼	285.00	—	—
LAL, LHL, Q4L	125–400 A	2, 3	LA400F	356.00	LA400S	356.00	LA400R	1655.00
LAL	125–400 A	3	—	—	LA400LS□☆w	356.00	—	—
MGL, MJL, PGL, PJL, PKL, PLL	300–800 A	2, 3	—	—	M800S▽◒	783.00	M800R▽◆	2159.00
PGL, PJL, PKL, PLL	250–1200 A	2, 3	—	—	P1200S◒	1260.00	P1200R◆	2790.00
			NEMA 4, 4X, 5, 3, 3R Stainless Steel (Hubs—See page 3-9)		NEMA 12/3R, 12K (Hubs—See page 3-9)			
					With Knockouts (NEMA 12K)		Without Knockouts◑ (NEMA 12/3R, 5)	
FAL, FHL, FCL	15–100 A	1, 2, 3	FA100DS	1431.00	FA100A	351.00	FA100AWK	335.00
HDL, HGL, HJL, HLL	15–150 A	2, 3	J250DS♦★▼	3405.00	—	—	J250AWK♦★▼	582.00
JDL, JGL, JJL, JLL	150–250 A	2, 3						
KIL◆, KCL	110–250 A	2, 3	IK250DS	5238.00	—	—	IK250AWK	878.00
LAL, LHL, Q4L	125–400 A	2, 3	LA400DS	5673.00	—	—	LA400AWK	903.00
LEL, LXL, LXIL	100–600 A	3	—	—	—	—	LX600AWK	3728.00
LCL, LIL	300–600 A	2, 3	—	—	—	—	LX600AWK	3728.00
MGL, MJL, PGL, PJL, PKL, PLL	300–800	2, 3	M800DS✪	10125.00	—	—	M800AWK✪	2459.00
PGL, PJL, PKL, PLL✱	600–1200	2, 3	—	—	—	—	P1200AWK✪	5700.00
			Nema 7‡ Cast Aluminum		Nema 9u Cast Aluminum			
JDL, JGL†●v	150–250 A	2, 3	J225X	4083.00	J225Y	2834.00		

▲ Enclosures with NRB or RB suffix have provisions for 3/4 in. through 2-1/2 in. bolt-on hubs in top endwall. Enclosures with R suffix have blank endwalls and require field cut opening. For details and hub catalog numbers see page 3-9.
■ Not CSA Certified.
♦ Accepts standard rated 80% breakers. Not rated at 100%.
★ Maximum short circuit rating is 25 kAIR at 600 Vac, 65 kAIR at 480 Vac, 125 kAIR at 240 Vac.
▼ Earth Leakage Module and Ground Fault Module are not compatible with these enclosures.
△ Maximum short circuit rating is 25 kAIR, 240 Vac.
□ Order service ground kit PKOGTA2 if required.
◊ Maximum short circuit rating is 18 kAIR, 480 Vac and 240 Vac.
☆ Copper wire only.
▽ When using a CT in the M800S and R enclosure the unit will no longer accommodate a 200% neutral solution.
◒ CE certified per IEC60439-1, IP20D, PE type TN-C or TN-S
✱ Accepts MGL or MJL standard rated (80%) breakers. Accepts PGL, PJL or PLL circuit breakers rated 80% (1200 A maximum) or 100% rated breakers, (800A maximum).
◆ CE certified per IEC60439-1, IP24D, PE type TN-C or TN-S
◑ Suitable for rainproof NEMA 3R application by removing drain screw from bottom endwall.
✪ CE certified per IEC60439-1, IP56, PE type TN-C or TN-S
◪ LEL 100% rated circuit breaker except for 600 A sensor.
◊ Short circuit rating is 100 k AIR at 480 Vac maximum.
‡ NEMA 7—Indoor Hazardous Locations—Division 1 and 2, Class I, Groups C and D; Class II, Groups E, F,and G; Class III.
† 80% rated circuit breakers only; SCCR 65 kA @ 240 Vac, 25 kA @ 480 Vac, 18 kA @ 600 Vac.
● Not UL Listed due to wire bending space.
u NEMA 9—Indoor Hazardous Locations—Division 1 and 2, Class II, Groups E, F,and G; Class III.
v Has a tapped 2-1/2 in. conduit opening on top and bottom end wall
w Short circuit current rating is 30 k AIR at 480 Vac.

316 Grade Stainless Steel Circuit Breaker Enclosures—NEMA 3, 3R, 4X, 5 and 12

Type 316 stainless steel circuit breaker enclosures offer superior corrosion resistance to a wider range of chemicals than Type 304 stainless steel enclosures. Type 316 better resists chloride and is often used in marine, waste treatment and transportation applications. Use watertight hubs from Section 3 page 10 of Digest 176. For other accessories reference Table 7.142 and Table 7.143. For dimensional information, reference Table 7.144.

Table 7.138: 316 Grade Stainless Steel CIrcuit Breaker Enclosures

Circuit Breakery			NEMA 3, 3R, 4X, 5 and 12	
Cat. No. Prefix...Suffix	Ampere Rating	Poles	Enclosure Cat. No.	$ Price
HDL, HGL, HJL, HLL	15–150 A	2, 3	J250SS	4698.00
JDL, JGL, JJL, JLL	150–250 A	2, 3		
MGL, MJL, PGL, PJL	300–800 A	2, 3	M800SS	13972.00
PKL, PLL				

Table 7.139: DC CIrcuit Breaker Enclosures for MA and MH DC-Rated Circuit Breakers

Circuit Breakery			NEMA 1 Surface Enclosurex	
Cat. No. Prefix...Suffix	Ampere Rating	Poles	Enclosure Cat. No.	$ Price
MAL, MHL	125–1000 A	2, 3	MA1200S	1355.00

x UL Listed Only
y Use 500 Vdc or 250 Vdc rated circuit breakers only.

Accessories . . . . . Page 7-58
Dimensions. . . . . Page 7-58

© 2012 Schneider Electric
All Rights Reserved

1 **Designation:** SW H221NRB SWITCH FUSIBLE HD 240V 30A 2P NEMA3R
1 **Designation:** SW GTK03 KIT EQUIPMENT GROUND CU/AL

Table 7.142: Insulated Groundable Neutral Assembly

Circuit Breaker		Neutral Assembly For Use With						Terminal Lug Data—Total Available (Line plus Load) AWG/kcmil
Cat. No. Prefix	Ampere Rating	NEMA 1 & 3R		NEMA 4, 4X, 5, 12 & 12K		NEMA 7 & 9		
		Cat. No.	$ Price	Cat. No.	Price	Cat. No.	$ Price	
FAL, FHL, FCL	100	SN100FA	**72.00**	SN100FA	**72.00**	—	—	(4) 14–1/0 Cu or (4) 12–1/0 Al
FAL, FHL, FIL	100	—	—	—	—	100SNA	**150.00**	FA060X/Y—(1) 14– 6 Cu, plus (1) 14–4 Cu FA100X/Y—(1) 14– 3 Cu, plus (1) 14–4 Cu
HDL,HGL,HJL,HLL	15–100	SN100FA	**72.00**	SN100FA	**72.00**	—	—	(4) 14–1/0 Cu or (4) 12–1/0 Al
HDL,HGL,HJL,HLL	125-150	SN400LA	**251.00**	SN400LA	**251.00**	225SNA	**198.00**	(2) 1–600 or (4) 1–250 Al/Cu, plus (2) 4–300 Al/Cu
JDL,JGL,JJL,JLL	150–250	SN400LA	**251.00**	SN400LA	**251.00**	—	—	(2) 1–600 or (4) 1–250 Al/Cu, plus (2) 4–300 Al/Cu
KIL, KCL	225	SN225KA	**201.00**	—	—	—	—	(2) 4–300 Al/Cu, plus (2) 14–1/0 Al/Cu
	225	—	—	SN225KA	**201.00**	—	—	(2) 4–300 Al/Cu, plus (2) 14–1/0 Al/Cu
	225	—	—	—	—	—	—	(4) 6–300 Cu
	250	—	—	SN400LA	**251.00**	—	—	(2) 1–600 or (4) 1–250 Al/Cu, plus (2) 4–300 Al/Cu
FAL...WB, FHL...WB	200	Requires (2) SN20A plus (1) SN20NI link	**(2) @$200.00 ea plus (1) @$27.60 ea**	—	—	—	—	(4) 6–250 Al/Cu, plus (2) 14–1/0 Al/Cu
LAL, LHL, Q4L LAL, LHL, Q4L, LCL, LIL LXL, LXIL	400	400SN	**248.00**	—	—	—	—	(2) 1–600 or (4) 1–250 Al/Cu, plus (2) 4–300 Al/Cu
	400	—	—	SN400LA	**251.00**	—	—	(2) 1–600 or (4) 1–250 Al/Cu, plus (2) 4–300 Al/Cu
LCL, LIL, LXL ■, LXIL ■	400	—	—	SNC400LX♦	**1152.00**	—	—	(2) 2–600 Cu, plus (2) 6–250 Cu
LCL, LXL LIL, LXIL, LEL	600	—	—	SNC800LX♦	**1506.00**	—	—	(4) 2–600 Cu, plus (1) 2–4/0 Cu
LCL, LXL■, LIL, LXIL■, LEL■	1000★	AL800SN	**365.00**	—	—	—	—	(6) 3/0–500 Al/Cu, plus (2) 6–250 Al/Cu
	1000★	—	—	SN1000MA	**365.00**	—	—	(6) 3/0–500 Al/Cu, plus (1) 1–4/0 Al/Cu
MGL, MJL▼	300–800 A	AL800SN	**365.00**	AL800SN	**365.00**	—	—	(6) 3/0–500 Al/Cu, plus (2) 6–250 Al/Cu
PGL, PJL, PKL, PLL△	250–1200 A	SN1200	**1034.00**	SN1200	**1034.00**	—	—	(8) 3/0–500 Al/Cu, plus (2) 350 4–300 Al/Cu

▲ For applications above 200 A requiring a neutral, use copper wire only.
■ When using MXL, MEL, LXL, LEL or LXIL circuit breaker with integral ground fault protection on a 3Ø4W system, neutral assembly SN1000MA or SNC800LX must be used for neutral CT. Order neutral CT separately.
♦ All Cu neutral assembly.
★ Rated maximum 900 A when used with Al wire.
▼ For NEMA 1 and 3R 200% neutral applications order Jumper kit SN800SNI and 2 of kit SN1200. (No 200% neutral is available for NEMA 4X or 12 devices.)
△ For applications with integral ground fault protection order Neutral Mounting Kit S33576MK and Neutral CT S33576 (400–1200 A only).

NEMA Type 1
Q2, FA, J, SWB
LA, MG, PG

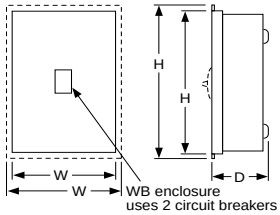

NEMA Type 3R
Q2, FA, LA, MG, J, PG, RWB
(uses side hinge cover)

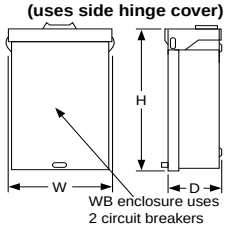

NEMA Type 7, Type 9
FA, JDL, JGL

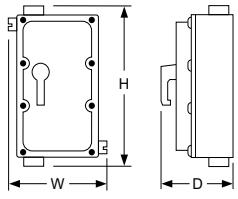

NEMA Type 4, 4X, 5, 12, 12K
IK, FA, J, LA, LX, MG, PG

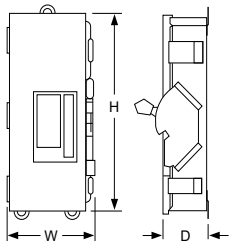

Table 7.143: Service Ground Kits

Circuit Breaker Cat. No. Prefix	Ground Bar Cat. No.	Number of Terminals	Conductors Per Terminal	Wire Range AWG/kcmil	$ Price	
					Field-Installable	Factory-Installed
QBL, QDL, QGL, QJL FAL, FHL, FCL, FIL, FAL...WB, FHL...WB KCL, KIL, LAL, LHL, Q4L	PKOGTA2□	2	1	10–2/0 Cu or 6–2/0 Al	**56.00**	**191.00**
HDL,HGL,HJL,HLL,JDL,JGL,JJL,JLL	PKOGTJ250	2	1	6–300 Al/Cu	**75.00**	**195.00**
LCL, LEL, LIL, LXL, LXIL MGL, MJL PGL, PJL, PKL, PLL	PKOGTA4	4	1	6–250 Al or Cu	**213.00**	**263.00**

□ Quantity (2) required if ground wires are run in parallel.

Table 7.144: Dimensions

Cat. No.	Approximate Dimension							
	Series	H		W		D		
		in.	mm	in.	mm	in.	mm	
FA100A, AWK	E2	19.50	495	9.13	232	4.88	124	
FA100DS	E2	19.50	495	9.13	232	4.88	124	
FA100F	E2	19.50	495	9.88	251	4.13	105	
FA100RB	E2	18.00	457	8.88	226	4.88	124	
FA100S	E2	18.13	461	8.63	219	4.13	105	
IK250AWK	E2	42.25	1073	13.88	353	7.50	191	
IK250DS	E2	42.25	1073	13.88	353	7.50	191	
HD100S	A1	17.00	431.8	7.90	200.7	4.75	120.7	
J250F	A01	32.40	823	15.40	391	6.00	152	
J250S	A01	31.36	797	14.36	365	6.00	152	
J250R	A01	31.05	789	14.47	368	6.28	160	
J250DS	A01	32.26	819	9.72	247	7.94	202	
J250SS	A01	32.26	819	9.72	247	7.94	202	
J250AWK	A01	32.26	819	9.72	247	7.94	202	
JD250S	A1	26.40	670.6	8.90	226.1	5.50	139.7	
J225X	A1	22.70	577	10.93	278	7.70	196	
J225Y	A1	22.70	577	10.93	278	7.70	196	
KA250SWB	E2	20.00	508	19.00	483	5.63	143	
KA250RWB	E2	20.25	514	19.00	483	7.12	181	

Cat. No.	Approximate Dimension						
	Series	H		W		D	
		in.	mm	in.	mm	in.	mm
LA400AWK	E2	42.25	1073	13.75	349	7.25	184
LA400DS	E2	42.25	1073	13.75	349	7.25	184
LA400F	E2	45.63	1159	16.50	419	6.50	165
LA400R	E2	44.00	1118	15.38	391	7.88	200
LA400S	E2	44.50	1130	15.38	391	6.50	165
LA400LS	A1	27.40	696.0	15.40	391.2	6.625	168.3
M800S	A1	40-3/8	1025.52	21	533.4	9-3/4	247.65
M800R	A1	40-3/8	1025.52	21	533.4	9-3/4	247.65
M800DS	A1	40-7/8	1036.96	20-3/4	527.05	9-1/2	241.3
M800SS	A1	40-7/8	1036.96	20-3/4	527.05	9-1/2	241.3
M800AWK	A1	40-7/8	1036.96	20-3/4	527.05	9-1/2	241.3
P1200S	A1	52-1/8	1323.98	21	533.4	9-3/4	247.65
P1200R	A1	52-1/8	1323.98	21	533.4	9-3/4	247.65
P1200AWK	A1	53	1346.20	20-3/4	527.05	9-1/2	241.3
Q22200NRB	E3	23.38	594	7.63	194	4.75	121
Q22200NS	E3	23.13	588	7.63	194	4.25	108
Q23225NF	E3	26.25	667	9.88	251	4.75	121
Q23225NRB	E3	26.25	667	9.88	251	5.50	140
Q23225NS	E3	26.25	667	9.88	251	4.75	121

See Supplemental Digest 3-37 and 3-38 for:

- Special paint
- Stainlee steel fronts
- Pilot lights, push buttons
- Lock-on SPL0
- Key interlock systems
- Legend plates

© 2012 Schneider Electric
All Rights Reserved

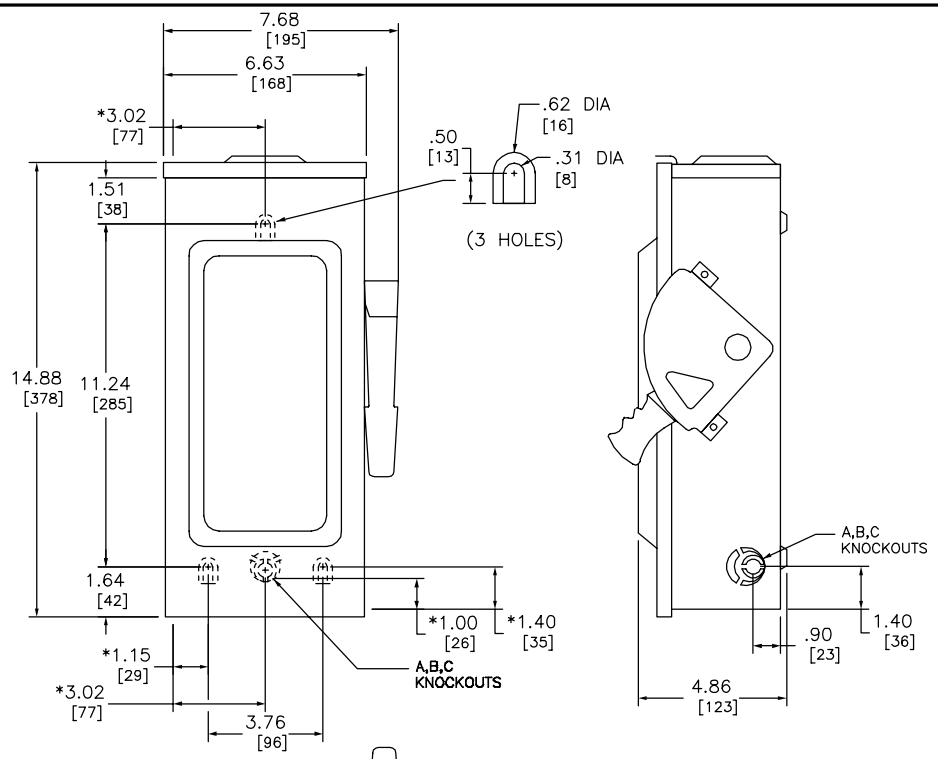

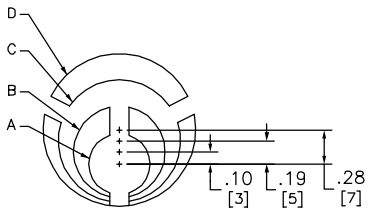

TANGENT KNOCKOUT

(DIMENSION ON DRAWING TO CENTERLINE OF "A" KNOCKOUT)

WIRING DIAGRAMS

FUSIBLE	NOT FUSIBLE

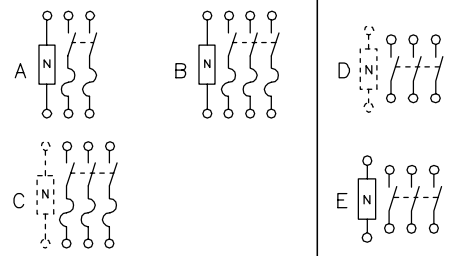

TERMINAL LUGS			
AMPERES	MAX WIRE	MIN WIRE	TYPE
30	#6 AWG	#14 AWG	AL OR CU

KNOCKOUTS				
SYMBOL	CONDUIT SIZE		DIAMETER	
	IN	MM	IN	MM
A	.50	13	.88	22
B	.75	19	1.13	29
C	1.00	25	1.38	35
D	1.25	32	1.75	44

NEMA TYPE 3R

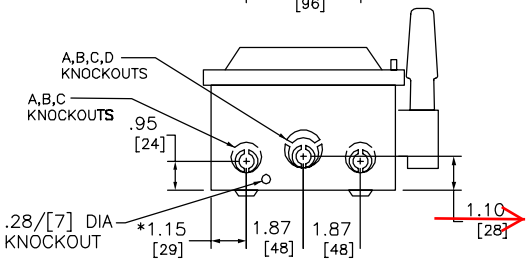

*DIMENSIONS TO BOX (NOT COVER)

DUAL DIMENSIONS: INCHES / MILLIMETERS

CATALOG NUMBER	VOLTAGE RATINGS	AMPERAGE RATINGS	WIRING DIAG	HORSEPOWER RATINGS															
				240VAC				480VAC				600VAC				250 VDC		600 VDC	
				STD		MAX		STD		MAX		STD		MAX					
				1Ø	3Ø	1Ø	3Ø	1Ø	3Ø	1Ø	3Ø	1Ø	3Ø	1Ø	3Ø	STD		MAX	
H221NRB	240VAC,250VDC	30	A	1 1/2●	3‡	3 ●	7 1/2‡	–	–	–	–	–	–	–	–	5 ●	–	–	–
H321NRB	240VAC,250VDC	30	B	1 1/2▲	3‡	3 ▲	7 1/2‡	–	–	–	–	–	–	–	–	5▲	–	–	–
H361NRB	600VAC,600VDC	30	B	–	–	–	–	3 ▲	5‡	7 1/2▲	15‡	–	7 1/2	–	20	5▲	–	10▲	15▲
H361RB	600VAC,600VDC	30	C	–	–	–	–	3▲	5 ■	7 1/2▲	15 ■	–	7 1/2	–	20	5▲	–	10▲	15▲
HU361RB	600VAC,600VDC	30	D	–	–	5▲	10■	–	–	7 1/2▲	20 ■	–	–	10 ▲	30	–	5▲	–	15▲
HU361RBEI	600VAC,600VDC	30	D	–	–	5▲	10■	–	–	7 1/2 ▲	20 ■	–	–	10 ▲	30	–	5▲	–	15▲
HU361NRB	600VAC,600VDC	30	E	–	–	5▲	10 ‡	–	–	7 1/2 ▲	20‡	–	–	10 ▲	30	–	5▲	–	15▲

NOTES;
UL LISTED – E2875
FINISH – GRAY BAKED ENAMEL
ALL NEUTRALS – INSULATED
WHEN MOUNTING THESE SWITCHES, ALLOW 3.00/[76] MIN CLEARANCE BETWEEN ENCLOSURES FOR OPENING OF SIDE HINGED DOOR.

▲ USE BOTH OUTER SWITCHING POLES
● USE BOTH SWITCHING POLES
■ IF CORNER GROUNDED DELTA, INSTALL NEUTRAL AND USE OUTER SWITCHING POLES FOR UNGROUNDED CONDUCTORS.
‡ FOR CORNER GROUNDED DELTA ONLY, USE OUTER SWITCHING POLES FOR UNGROUNDED CONDUCTORS.

HEAVY DUTY SAFETY SWITCHES
VISIBLE BLADE TYPE
30 AMPERE
ENCLOSURE – NEMA TYPE 3R RAINPROOF

SQUARE D COMPANY

DWG# NO. 2229

APRIL 2005

2229

Neutral Assemblies—Field-Installed Neutral Assemblies for Fusible and Non-Fusible 240 and 600 Volt Safety Switches

Amperes	Series Number (See pages 3-13, 3-14)	Standard Neutral Kit Cat. No.	Terminal Data AWG/kcmil	$ Price	Optional Copper Only Neutral Kit Cat. No.	Terminal Data AWG/kcmil	$ Price
30	F1, F5–F6	SN03▲	(3) 2 Max. Al/Cu	**83.00**	SN03C▲	(3) 6 Max. Cu	**102.00**
60	F1–F3, F5–F6 (600 V)	SN0610	(2) 1/0 Max. Al/Cu (2) 6 Max. Al/Cu	**107.00**	SN0610C	(2) 1/0 Max. Cu (2) 6 Max. Cu	**114.00**
	F4, F5–F6 (240 V)	SN03▲	(3) 2 Max. Al/Cu	**83.00**	SN03C▲	(3) 6 Max. Cu	**102.00**
100	F2–F6	SN0610	(2) 1/0 Max. Al/Cu (2) 6 Max. Al/Cu	**107.00**	SN0610C	(2) 1/0 Max. Cu (2) 6 Max. Cu	**114.00**
200■	F5–F6	SN20A	(2) 250 Max. Al/Cu (1) 1/0 Max. Al/Cu	**200.00**	SN20C	(2) 250 Max. Cu (1) 1/0 Max. Cu	**246.00**
400 and 600	E1–E4	H600SN	(4) 750 Max. Al/Cu (1) 300 Max. Al/Cu	**327.00**	H600SNC	(2) 600 Max. Cu (2) 350 Max. Cu (1) 250 Max. Cu	**452.00**
800	E2–E4	H800SNE4	(6) 750 Max. Al/Cu (2) 350 Max. Al/Cu	**753.00**	—	—	—
1200	E2–E4	H1200SNE4	(8) 750 Max. Al/Cu (2) 350 Max. Al/Cu	**1034.00**	—	—	—

Note: Neutrals cannot be installed in 4P, 6P, or 200 A NEMA 4X fiberglass reinforced polyester safety switches.

▲ The following Series F5–F6 devices use SN0610(C): H-361-2, H-361-2RB, H-361-2A and H-361-2AWK.

■ For 200% neutral, order (2) neutral kits and (1) SN20NI neutral jumper kit. (2) 350 Max. Al/Cu.

Equipment Grounding Kits□

Equipment grounding kits are field-installed and UL Listed in 30–1200 A heavy duty switches. For factory installation of equipment grounding kit, add suffix GL to standard Cat. No. (Example: H361GL).
Price = Switch + Kit Price.

Equipment Grounding Kits—Field- or Factory-Installed Equipment Grounding Kits–240 and 600 V

Amperes	Series Number (See pages 3-13, 3-14)	Standard Cat. No.	Terminal Data AWG/kcmil	$ Price	Optional Copper Only Cat. No.	Terminal Data AWG/kcmil	$ Price
30	F1, F5–F7	GTK03♦	(2) 12 Cu or (2) 10 Al or (1) 4 Max. Al/Cu	**11.40**	GTK03C♦	(1) 6 Max. Cu	**13.40**
60★	F1–F3★, F5–F7 (600 V)	GTK0610★	(2) 1/0 Max. Al/Cu	**18.90**	GTK0610C★	(2) 4 Max. Cu	**22.70**
60	F4, F5–F6 (240 V)	GTK03	(2) 12 Cu or (2) 10 Al or (1) 4 Max. Al/Cu	**11.40**	GTK03C	(1) 6 Max. Cu	**13.40**
100	F2–F7	GTK0610	(2) 1/0 Max. Al/Cu	**18.90**	GTK0610C	(2) 4 Max. Cu	**22.70**
200	F5–F7	PKOGTA2	(2) 2/0 Max. Al/Cu	**55.00**	PKOGTC2	(2) 4 Max. Cu	**58.00**
400 and 600	E2–E4	PKOGTA2▼ (2 Required)	(2) 2/0 Max. Al/Cu	**55.00**	PKOGTC3	(3) 1/0 Max. Cu	**107.00**△
800	E2–E4	PKOGTA7	(4) 350 Max. Al/Cu	**198.00**△	—	—	—
1200	E2–E4	PKOGTA8	(8) 350 Max. Al/Cu	**203.00**△	—	—	—

♦ The following Series F5–F6 devices use GTK0610(C): H-361-2 and H-361-2RB.

★ 4- and 6-pole 30 A F Series.

▼ Two required if grounding conductors are run in parallel.

△ PE1A Discount Schedule

□ Equipment Ground Kits are factory-installed standard in 30–200 A series F NEMA 4-4X-5 (stainless) and 12. Equipment Ground Kits are standard on all NEMA Types, Series F 30–200 A 4 and 6 pole switches.

Table 3.25: Square D Gray Paint

Description	Cat. No.	$ Price
16 oz. Aerosol Paint Can, Square D Gray Paint	PK49SP	**39.00 ea.**

Note: Shipped in quantities of 6.

Special Paint

UL Listed heavy duty switches are available painted with special safety colors. To order safety colored switches add suffixes as noted in Table 3.26 to the standard switch commercial reference number.

All colors comply with OSHA Standard 1910.144 and ANSI Specification Z535.1 for marking physical hazards.

Table 3.26: Safety Colors

Safety Color	Suffix
Black	SP0
Red	SP2
Orange	SP3
Yellow	SP4
Green	SP5
Blue	SP6
Purple	SP7
Gray	SP8
Gray ANSI 61	SP861▲
White	SP9

▲ Standard Square D ANSI 49 grey paint, when selecting this suffix, switches will receive additional coat of paint.

A minimum quantity of 10 is required. Not available for NEMA Type 7/9 or stainless steel products.

Price Adder Each Switch

Quantity	$ Price							
	30 A	60 A	100 A	200 A	400 A	600 A	800 A	1200 A
10	**242.00**	**278.00**	**434.00**	**479.00**	**1137.00**	**2801.00**	**3501.00**	**4376.00**

Lock-Off Guard Kits★

Available factory- or field-installed the lock-off guard works by covering the lockout/tagout opening whenever the switch is in the ON position. This prevents a padlock from being inadvertantly inserted into the switch lockplate. The device is designed to help prevent accidental misapplication of a lockout device. These kits are marked cURus (UL Component Recognized) for field or factory installation.

Amperes♦	Kit Cat. No.	Field-Installed $ Price	Factory-Installed $ Price
30 A 60 A 240 V	LOGK1	**44.30**	**146.00**
60 A 600 V 100 and 200 A	LOGK2	**45.00**	**177.00**

■ For factory installation, add suffix "LOG" to the switch catalog number.

♦ For use with 30–200 Ampere Series F NEMA 1, 3R, 12 and 12K switches only.

★ Factory install and kits are available for NEMA 1, 3R, 12 and 12K switch enclosures only.

© 2012 Schneider Electric
All Rights Reserved

Date Received: 8/30/2017
Date Reviewed: 9/12/2017

Reviewed by: Scott Miles	**Work Order Number:** 90170-079
Submittal Number: 265116-01	**Contract Number:** CA1435129
Specification Number: 265116	**Project:** Prince Frederick Fire & Life Safety Phase 2
Specification Name: Lighting	**Doc Id:** 19901

The following has been reviewed for general arrangement. Any approval is subject to compliance with all contract requirements. Detailed dimensions and quantities have not been checked.

Comments and Actions

ITEM	DESCRIPTION/COMMENT	ACTION
Type A	No Comments	A
Type EM	No Comments	A
Type X	No Comments	A

Action Codes:

A– Approved	**AN** – Approved as noted
ANR – Approved as noted; return record copy	**RR** – Revise and resubmit
REJ – Rejected	**RA** – Receipt acknowledged

General Contractor: *Contact Name* Sue E. Davis *Firm Name* S E Davis Construction, LLC *Address* P.O. Box 1008, La Plata, MD 20646 *Telephone* 301-870-2400 *Email Address* sue@sedavisconstruction.com	*Contractor:* *Contact Name* *Firm Name* Lineload Electrical Contractors, Inc. *Address*27 Henry Ford Circle, Waldorf, MD 20602 *Telephone* 301-932-4033 *Email Address* ryan@lineload.net	*Contact Name* Ryan James *Firm Name* State Highway Administration *Address* 138 Defense Highway, Annapolis, MD 21401 *Telephone* 443-532-5824 *Email Address*rjames@sha.state.md.us

GC Submittal №:	CA1435129-265116.01
Subcontractor:	Lineload Electrical Contractors, Inc.
Supplier(s):	
Specification №/Dwg. Reference:	265116
Section Title:	Lighting
Submittal Description/Items Submitted:	Columbia Lighting 2'x4' Dedicated T8 Lensed Troffer
	Dual Lite LZ Series Emergency Lighting Unit
	Dual Lite SE Series Die Cast Exit Sign

General Contractor's Stamp	*Architect's Stamp*
Engineer's Stamp	

SHEPHERD ELECTRIC

LIGHTING DEPARTMENT

APPROVAL LIGHTING SUBMITTAL

SHA - BLDG REN

PHASE II AT ADM. OFFICE

ELECTRICAL CONTRACTOR:

LINE LOAD ELECTRICAL

SUBMITTED BY:

KIRSTEN BARBOR

SHEPHERD ELECTRIC SUPPLY
240-457-4213

ARCHITECT, ENGINEER, GENERAL CONTRACTOR, AND/OR ELECTRICAL CONTRACTOR:

Please provide specific direction requested for each fixture type as indicated in the table of contents by an asterisk, (if any). There may be specific questions that require your attention to prevent delay when this project is released.
Please call with any questions!!!

7401 Pulaski Highway
Baltimore, MD 21237
410-866-6000 1-800-253-1777
Fax: 410-866-9038

Shepherd electric supply
Since 1892
www.shepherdelec.com

5748 Industry Lane
Frederick, MD 21704
301-644-0400 1-855-530-1735
Fax: 301-644-0411

To: LINE LOAD ELECTR. CONST. INC.
27 Henry Ford Circle
Waldorf, MD 20602
Attention:m Kerry Peaper

Submittal

Source Quote: 16KB-586
Entry Date: 8/29/2017
Project: SHA - BLDG REN PHASE II AT ADM. OFFICE

Original Submittal for Prior Approval
1 Copy of Submittals is Attached

Qty	Type	Mfg	Description
4	A	COLUMBIA	JT824-232G-FAA12125-EPU
8	A	GE LAMPS	F32T8/SPP35/ECO 66348
2	EM	DUAL-LITE	LZ30I-03L
4	X	DUAL-LITE	SEDRWNEI

Remarks:

Shepherd electric supply
Celebrating 120 Years!
1892 - 2012

PLEASE READ

CONTRACTOR to VERIFY all voltages, finishes, exit colors, exit canopies, arrow configurations, lamp color and quantities prior to release of this job..

A SIGNED APPROVAL IS PREFERABLE WHEN RELEASED.

The attached submittals are for reference purposes only. Measurements, templates, back-boxes, dimensions, etc… are subject to change without notice.

Once the above bill of material has been released, any changes or cancellations to any of the items above may result in restocking, cancellation for change fees per manufacturer's terms and conditions.

BALTIMORE
7401 Pulaski Highway
Baltimore, MD 21237
410.866.6000
800.253.1777
Fax: 410.866.6001

BELTSVILLE
6920 Distribution Drive
Beltsville, MD 20705
301.595.9000
877.595.9191
Fax: 301.595.9006

FREDERICK
5748 Industry Lane
Frederick, MD 21704
301.644.0400
855.530.1735
Fax: 301.644.0401

STERLING
45080 Old Ox Road
Dulles, VA 20166
703.955.5000
877.811.9191
Fax: 703.955.5001

Columbia LIGHTING

JT824-2, JT824-3

2' × 4' Dedicated T8 Lensed Troffer / 2 or 3-Lamp T8

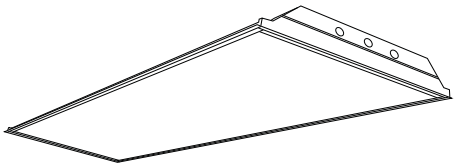

FEATURES

- T8 optimized fluorescent lensed troffer
- Shallow design frees up plenum space
- Hemmed fixture edges reduce risk of injury during fixture handling and installation
- Integral T-bar clips quickly secure fixture to the grid
- Corner hinging for easy insertion and removal of shielding frame
- Housing embossments provide extra strength and rigidity
- Housing ends secured by unique corner interlock and screws
- Snap-in ballast cover requires no tools for wireway access
- Flush steel shielding frame, screw assembled for easy diffuser replacement
- Rotary action cam latches. Smooth operating for secure shielding retention
- Metal to metal light leak protection on all four sides of shielding frame
- Rotary lock lampholders for positive lamp contact
- Heat sink embossments behind ballasts for cooler operation, longer life
- Recessed, surface or cable mount
- UL listed 1598

PROJECT INFORMATION

Project Name

Type

Catalog No.

Date

CONSTRUCTION

Housing is constructed of heavy gauge steel, die formed for extra rigidity. Four T-bar clips integral to housing. Housing features hemmed edges. Door frame hinges and latches from either side. Wireway accessible from below for upgrades or maintenance.

BALLASTS

Energy efficient, thermally protected, automatic resetting, Class "P", high power factor, sound rated A, unless otherwise specified. For a specific vendor and/or ballast, specify as option. CEE NEMA Premium compliant.

ELECTRICAL

Standard class "P," thermally protected, autoresetting HPF ballast, sound rated A. CEE NEMA Premium compliant. All ballast leads extend a minimum of 6" through access location. NEC/CECcompliant ballast disconnect is standard.

FINISH

All metal parts processed with a phase phosphate bonding treatment. Grid units are pre-painted with high gloss baked white enamel, 86% reflective. Polyester powder coat paint after fabrication (PAF) option available, reflectance 90%.

SHIELDING

100% virgin acrylic prismatic 12, extruded and roll-embossed, diagonally oriented female prisms standard. Other shielding may be specified. If desired shielding media is not shown in ordering guide, contact your local Hubbell Lighting representative.

CEILING COMPATIBILITY

Designed for recessed installation in standard inverted tee grid ceilings (G), recessed installation in hard ceilings (G with FK accessory), Surface mount at ceiling plane (SM) or cable mount suspension below ceiling plane (CM). For compatibility with specific ceilings contact your Hubbell Lighting representative.

CERTIFICATION

All luminaires are built to UL 1598 standards and bear appropriate UL and cUL or CSA labels. Damp location labeling is standard. Emergency-equipped fixtures labeled UL 924. UL Sanitation Approved.

ORDERING INFORMATION

EXAMPLE JT824-232G-FSA12-EU-F0735- C388-GLR

JT8 **24** – **32** – ____ – ____ – ____

MODEL

- **JT8** Dedicated T8 Lensed Troffer

NO. OF LAMPS

- **2** Two
- **3** Three

SIZE

- **24** 2' × 4'

LAMP TYPE

- **32** 4', T8: 32, 30, 28 or 25 Watt

CEILING TYPE

- **G** Inverted T-Bar[1]
- **SM** Surface Mount
- **CM** Cable Mount[2]

DOOR STYLE

- **FS** Flush Steel
- **FA** Flush Aluminum

For additional door styles contact your local Columbia Lighting representative.

SHIELDING

- **A12** Pattern 12 Acrylic 0.100" Nominal (Std.)
- **A12.125** Pattern 12 Acrylic 0.125" Nominal
- **A19** Pattern 19 Acrylic 0.156" Male Prism
- **PC1** Silver Parabolic Louver ½" × ½" × ½"

For more shielding, see Options and Accessories.

BALLAST

- **E** Electronic T8, Instant Start
- **3E** 3-Lamp Electronic T8, Instant Start
- **24E** (1) 2-Lamp & (1) 4-Lamp Electronic T8, Instant Start (For use with MS9)
- **EP** Electronic T8, Programmed Start
- **3EP** 3-Lamp Electronic T8, Programmed Start
- **ELW** 2-Lamp Electronic T8, 0.77 Ballast Factor, Low Wattage, Instant Start
- **3ELW** 3-Lamp Electronic T8, 0.77 Ballast Factor, Low Wattage, Instant Start

For a specific ballast vendor, show as option.

VOLTAGE

- **U** 120V-277V
- **347** 347V

OPTIONS

- **F830** 30K 78+CRI T8 Lamps Installed
- **F835** 35K 78+CRI T8 Lamps Installed
- **F841** 41K 78+CRI T8 Lamps Installed
- **GLR** Fast Blow Fuse
- **EL** Emergency Battery Pack Installed
- **PAF** Paint After Fabrication
- **MS9** Master/Satellite w/9' Harness
- **C388** ⅜" Flex with 3 No. 18 Wires
- **C384** ⅜" Flex with 3 No. 14 Wires
- **C488** ⅜" Flex with 4 No. 18 Wires
- **C424** ½" Flex with 4 No. 14 Wires
- **M4R** Specular Reflector
- **G1** Single Gasket (Door to Housing)
- **G2** Double Gasketing (G1 and Lens to Door)
- **G3** Triple Gasketing (G2 and Housing to Ceiling)
- **EOR** End of Row (SM/CM only)[3,4]
- **INT** Intermediate (SM/CM only)[3,4]
- **CP** Chicago Plenum

For a complete set of options, see Options and Accessories.

ACCESSORIES (ORDER SEPARATELY)

- **FK24** 2' × 4' Flange Kit
- **FKCR** Flange Kit Continuous Row Connector
- **CM48Y2SC3F-KIT** 48" Cable Mount Kit for 2' wide CM ceiling type, 3 Wire Feed Cord

[1] For drywall order flange kit accessories separately.
[2] Order hanger accessories separately.
[3] Provides ends with wiring access for continuous row mounting.
[4] Contact Hubbell representative for continuous row, 3-lamp fixtures.

© 2017 Columbia Lighting, a division of Hubbell Lighting, Inc. Because of continuing product improvement programs, Columbia Lighting reserves the right to change specifications without notice. 701 Millennium Blvd. Greenville, SC 29607 / Tel **864.678.1000** / Website **www.columbialighting.com**

Hubbell Lighting, Inc.

SHA - BLDG REN PHASE II AT ADM. OFFICE

Columbia LIGHTING

JT824-2, JT824-3

2' × 4' Dedicated T8 Lensed Troffer / 2 or 3-Lamp T8

PHOTOMETRIC DATA

Test **13120** Test Date **11/07/2003**

LUMINAIRE DATA

Luminaire	**JT824-332G-FSA12 J Lensed Troffer 2' x 4' 3-Lamp with A-12 Pattern Acrylic Prismatic Lens**
Ballast	**B332I120RH-A**
Ballast Factor	**0.88**
Lamp	**F32T8**
Lumens per Lamp	**2900**
Watts	**84**
Shielding Angle	**N/A**
Spacing Criterion	**0° = 1.23 90° = 1.36**

AVG. LUMINANCE (Candela/Sq. M.)

Average Luminance Angle	0.0	22.5	45.0	67.5	90.0
0	4289	4289	4289	4289	4289
30	4196	4277	4409	4495	4518
40	3635	4032	4230	4421	4515
45	3655	3764	3994	4218	4355
50	3299	3469	3761	3940	4047
55	2993	3133	3443	3569	3647
60	2706	2694	2903	3078	3161
65	2420	2238	2231	2547	2631
70	2178	1908	1643	2223	2326
75	2101	1792	1501	2130	2368
80	2255	1822	1831	2229	2583
85	2344	2009	2079	2555	2696

COEFFICIENTS OF UTILIZATION (%)

RCR	RC	80				70				50			0
	RW	70	50	30	10	70	50	30	10	50	30	10	0
1		93	89	85	82	90	87	84	81	83	81	79	72
2		85	78	73	68	83	77	72	67	74	70	66	61
3		78	69	63	58	76	68	62	57	65	60	56	52
4		71	62	55	49	70	61	54	49	59	53	48	45
5		66	55	48	43	64	54	48	42	53	47	42	39
6		61	50	43	38	59	49	42	37	48	42	37	35
7		57	45	38	33	55	45	38	33	44	37	33	31
8		53	42	35	30	51	41	34	30	40	34	29	28
9		49	38	31	27	48	38	31	27	37	31	27	25
10		46	35	29	24	45	35	29	24	34	28	24	23

RCR = Room Cavity Ratio
RC = Effective Ceiling Cavity Reflectance **RW** = Wall Reflectance

INDOOR CANDELA PLOT

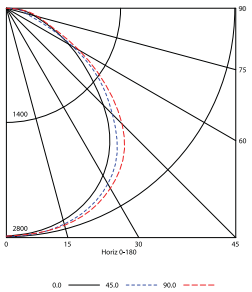

ZONAL LUMEN SUMMARY

Zone	Lumens	Lamp	Fixt.
0-30	2232	25.7	30.3
0-40	3678	42.3	49.9
0-60	6216	71.4	84.4
0-90	7364	84.6	100.0
0-180	7364	84.6	100.0

ENERGY DATA

Total Luminaire Efficiency	**84.6%**
Luminaire Efficacy Rating (LER)	**77**
IESNA RP-1-2004 Compliance	**Non-Compliant**
Comparative Yearly Lighting Energy Cost per 1000 Lumens	**$3.12 based on 3000 hrs. and $0.08 per KWH**

Test **13121** Test Date **1/8/03**

LUMINAIRE DATA

Luminaire	**JT824-232G-FSA12 J Lensed Troffer 2' x 4' 2-Lamp with A-12 Pattern Acrylic Prismatic Lens**
Ballast	**B232I120RH-A**
Ballast Factor	**0.88**
Lamp	**F32T8**
Lumens per Lamp	**2900**
Watts	**60**
Shielding Angle	**N/A**
Spacing Criterion	**0° = 1.23 90° = 1.36**

AVG. LUMINANCE (Candela/Sq. M.)

Average Luminance Angle	0.0	22.5	45.0	67.5	90.0
0	2967	2967	2967	2967	2967
30	2850	2921	3045	3133	3155
40	2638	2733	2893	3073	3160
45	2430	2537	2719	2912	2986
50	2198	2308	2513	2669	2714
55	1973	2046	2220	2327	2394
60	1757	1754	1806	1923	2036
65	1577	1461	1377	1563	1752
70	1509	1302	1100	1361	1603
75	1596	1329	1169	1377	1650
80	1716	1450	1389	1512	1778
85	1780	1656	1568	1709	1850

COEFFICIENTS OF UTILIZATION (%)

RCR	RC	80				70				50			0
	RW	70	50	30	10	70	50	30	10	50	30	10	0
1		94	91	87	84	92	89	85	83	85	82	80	74
2		87	80	74	70	84	78	73	69	75	71	67	62
3		79	71	64	59	77	69	63	58	67	62	57	54
4		73	63	56	50	71	62	55	50	60	54	49	46
5		67	57	49	44	66	56	49	44	54	48	43	40
6		62	51	44	39	61	50	43	38	49	43	38	36
7		58	47	39	34	56	46	39	34	45	38	34	32
8		54	43	36	31	53	42	35	31	41	35	30	28
9		50	39	32	28	49	39	32	28	38	32	27	26
10		47	36	30	25	46	36	29	25	35	29	25	23

RCR = Room Cavity Ratio
RC = Effective Ceiling Cavity Reflectance **RW** = Wall Reflectance

INDOOR CANDELA PLOT

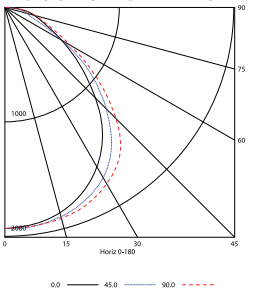

ZONAL LUMEN SUMMARY

Zone	Lumens	Lamp	Fixt.
0-30	1542	26.6	30.8
0-40	2538	43.8	50.7
0-60	4234	73.0	84.6
0-90	5004	86.3	100.0
0-180	5004	86.3	100.0

ENERGY DATA

Total Luminaire Efficiency	**86.3%**
Luminaire Efficacy Rating (LER)	**73**
IESNA RP-1-2004 Compliance	**Non-Compliant**
Comparative Yearly Lighting Energy Cost per 1000 Lumens	**$3.29 based on 3000 hrs. and $0.08 per KWH**

DIMENSIONAL DATA

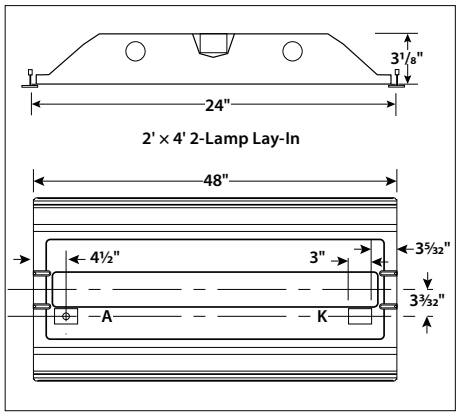

A: ⅞" Diameter knockout
K: 2" × 3" through hole for access plate.

NOTE: All dimensions are in inches; dimensions and specifications are subject to change without notice. Please consult factory or check sample for verification.

CEILING COMPATIBILITY

Type G

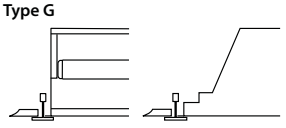

For lay-in installation in exposed grid ceilings. Maximum tee widths of 1" and maximum tee heights of 2" allowed.

FK24 Flange Kit

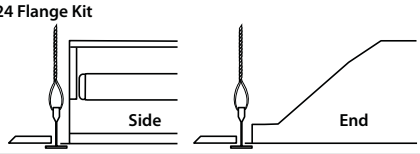

For hard ceiling applications order FK24 flange kit. Flange kit wires directly into concealed ceiling opening for a clean, finished appearance.

FKCR

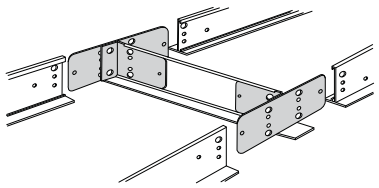

For flanged fixtures in row configurations, the FKCR adapter bracket kit is required in addition to the FK24 kit. Order one less FKCR than the total number of fixtures in row. (Example: Row of two, order (2) FK24 & (1) FKCR)

Row cut out dimensions using FK24 & FKCR adapters:
Width 24⅜", Length [48" × (# in row)] + ⅜". Example: (48" × 2) + ⅜"= 96⅜"

Flange kit rough in dimensions for single unit only: 24⅜" × 48⅜"

© 2017 Columbia Lighting, a division of Hubbell Lighting, Inc. Because of continuing product improvement programs, Columbia Lighting reserves the right to change specifications without notice. 701 Millennium Blvd. Greenville, SC 29607 / Tel **864.678.1000** / Website **www.columbialighting.com**
Hubbell Lighting, Inc.

SHA - BLDG REN PHASE II AT ADM. OFFICE

Columbia LIGHTING

JT824-2, JT824-3

2' × 4' Dedicated T8 Lensed Troffer / 2 or 3-Lamp T8

DIMENSIONAL DATA - SURFACE MOUNT (SM) AND CABLE MOUNT (CM)

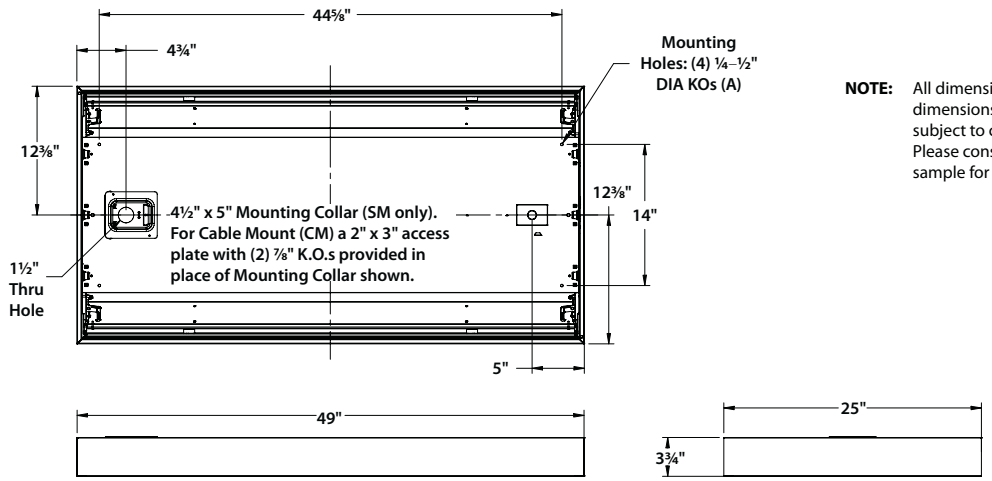

NOTE: All dimensions are in inches; dimensions and specifications are subject to change without notice. Please consult factory or check sample for verification.

SURFACE MOUNT

Order SM ceiling type. Mounting collar required for surface mounting. (4) Mounting knock-outs, ¼" to ½" provided as shown, marked "A".

CABLE MOUNT

Order CM ceiling type. Access plate supplied for cable mounting or suspension. Use CM48Y2SC3F-KIT 48" cable mount kit. Includes 3 wire feed cord. For other wiring needs, contact Hubbell Lighting representative. Mounting knock-outs, ¼" to ½", provided as shown, marked "A".

© 2017 Columbia Lighting, a division of Hubbell Lighting, Inc. Because of continuing product improvement programs, Columbia Lighting reserves the right to change specifications without notice. 701 Millennium Blvd. Greenville, SC 29607 / Tel **864.678.1000** / Website **www.columbialighting.com**

Hubbell Lighting, Inc.

SHA - BLDG REN PHASE II AT ADM. OFFICE

Shepherd electric supply Since 1892	Manufacturer: GE LIGHTING	Type: A LAMP
	Catalog Number: F32T8/SPP35/ECO 66348	

E-CATALOG(/CATALOG/) > FLUORESCENT(/CATALOG/C/FLUORESCENT) >
FULL WATTAGE(/CATALOG/C/FLUORESCENT_FULL_WATTAGE) >
F32T8/SPP35/ECO-LFL PULP TRY PK NEW COLOR TEMP(/CATALOG/P/66348)

()

F32T8/SPP35/ECO

66348

91
lumens/watt

F32T8/SPP35/ECO-LFL PULP TRY PK NEW COLOR TEMP

SHA - BLDG REN PHASE II AT ADM. OFFICE

Specifications

GENERAL CHARACTERISTICS

Base Description	Medium Bi-Pin
Base Type	Pin/Plug-In
Mercury Content	2.95 mg
Mercury-Picogrm per mean lm hr	36.1
Rated Life Instant Start-Hrs	21000 h @ 3 h 30000 h @ 12 h
Rated Life Rapid Start - Hrs	30000 h @ 3 h 36000 h @ 12 h
Starting Temp (MIN) C-degrees	10 °C
Bulb Material	Sodalime glass
Rated Life Hours-nominal	30000 h
Primary Application	Full Wattage
Product Technology	Linear Fluorescent
Base	G13
Bulb Shape	T8

ELECTRICAL CHARACTERISTICS

Rated power (Watts)	32 W

PHOTOMETRIC CHARACTERISTICS

Mean Lumens nominal	2725 lm
Nominal Initial Lumen per Watt	91
Initial Lumens-nominal	2900 lm
Color Rendering Index-CRI	80
Color Temperature	3500 K

DIMENSIONS

Diameter	1.0 in

SHA - BLDG REN PHASE II AT ADM. OFFICE

Nominal Length	48.0 in

PACKAGING INFORMATION

Alternative Unit Of Measure	CASE
Standard Package Quantity	36
Ean UPC	043168663489
Standard Package GTIN	10043168663486
Length	48.81 in
Width	7.88 in
Height	7.31 in
Volume	1.62708 cuft
Gross Weight	20.0 lb
Pack Level Description	Case
Sales Unit	Case
UCC	043168663489

SHA - BLDG REN PHASE II AT ADM. OFFICE

DUAL LITE®

LZ Series

Designer Emergency Lighting Unit 15W

Catalog Number	
Comments	Type

FEATURES

Application

The LZ Series is an indoor emergency lighting unit with 10 - 30W capacity utilizing a sealed lead-calcium battery in 6 VDC. Supplied standard with two halogen MR16 lamps. High-output LED based MR16 option provides increased spacing, additional run-time and/or increased remote capacity. Matching remote heads are also offered. The integrated lamp design offers greater protection from vandalism.

Construction

Available in two housing sizes, one for standard capacity models (LZ2, LZ15) and increased depth for higher capacity models. Made from UV stabilized thermoplastic with a snap-together design in white or black finish. Includes test switch and AC-ON indicator.

Installation

Unit mounts to 3½", 4" octagon or 4" square boxes. Back-plate provides a universal knockout pattern for mounting to outlet box. Keyholes provided for securing housing to wall surface. LZ2 and LZ15 can be ceiling mounted. All AC connections made inside unit housing.

Illumination

The LZ Series provides illumination with two halogen MR16 lamps positioned inside an adjustable "eyeball" style housing. Optional lamps for greater light output include 10W MR16 and maximum coverage high-output LED based MR16.

Compliances

UL 924 Listed (optional damp location listed)
NFPA 70
NFPA 101
ADA compliant (LZ standard models only)
U.S. Patent Nos. D400,991, D419,708, D400,995, 6,280,042 and 6,019,477

Warranty

Fixture: 3 Years Full, 5 Years Full with Spectron

Battery:

Lead-Acid Models - 2 Years Full, 3 Years Pro Rata
Lifetime LED Warranty

Standard Size

30 Watt Capacity with deep housing

LZR remote heads
(sold separately)

ORDERING GUIDE

LZ –

Model	Capacity	Battery Type	Rating	Output Volts	Self-Diagnostics	Options
	2 10 Watts **15** 15 Watts **25** 25 Watts **30** 30 Watts	**Blank** Lead-Calcium	**Blank** Standard Model **D** Damp Location Listing [4, 5]	**Blank** 6 Volts	**Blank** None **I** Spectron® Self-test/ Self-diagnostic Electronics [2]	**Blank** 5W Halogen lamps **10W** 10W Halogen lamps [1] **03L** 3W LED Lamps [3] **B** Black finish **V** Voltmeter **0** Unit supplied without lampheads [6] **24K** 220-240VAC, 60 Hz operation **A21** Aux. 2-conductor, line cord, 120VAC only [7] **A31** Auxiliary 3-conductor line cord, 120VAC only [8]

1 Available on units with capacities of 20 watts or more
2 Must order with damp location listing on LZ2 model
3 Not available with LZ2I and LZ15I Spectron® equipped unit
4 Not available with -03L (LED) option
5 Only available with LZ2 or LZ25
6 Available with LZ30 model only
7 Available on LZ2 only
8 Available on all models except LZ2

HUBBELL® Lighting

SHA - BLDG REN PHASE II AT ADM. OFFICE

DUAL LITE®

LZ Series

Designer Emergency Lighting Unit 15W

		Voltage	Battery	Lamp	Capacity	Runtime	Extended Runtime	Remote Watts	Number of Remotes: 5W HAL	Number of Remotes: 10W HAL	Number of Remotes: 3W LED
STANDARD	LZ2	6VDC	Lead Calcium	5W HAL	10 watts	90 min.	No	0	0	0	0
	LZ15	6VDC	Lead Calcium	5W HAL	15 watts	90 min.	Yes	5	1	0	1
	LZ30	6VDC	Lead Calcium	5W HAL	30 watts	90 min.	Yes	20	4	2	6
DAMP	LZ2D	6VDC	Lead Calcium	5W HAL	10 watts	90 min.	No	0	0	0	-
	LZ25D	6VDC	Lead Calcium	5W HAL	25 watts	90 min.	Yes	15	3	1	-
LED	LZ2-03L	6VDC	Lead Calcium	3W LED	10 watts	90 min.	No	0	0	0	0
	LZ15-03L	6VDC	Lead Calcium	3W LED	15 watts	90 min.	Yes	9	1	0	3
	LZ30-03L	6VDC	Lead Calcium	3W LED	30 watts	90 min.	Yes	24	4	2	8

SPECIFICATIONS

Standard Features:

- External push-to-test switch and AC-ON indicator
- Low voltage disconnect
- Transformer isolation
- Temperature compensated charger circuitry
- MR16 Halogen lamp with rated 200 hour life
- Standard 120/277VAC, 60Hz.
- Optional 220/240VAC, 50/60Hz
- Weight is 4-12 lbs. depending on capacity

Optional Features:

- Spectron® self-test/self-diagnostic circuitry monitors lamp status, lamp load transfer circuitry and battery capacity; displays any fault detected via a flashing code. Automatically runs periodic diagnostic routines to ensure unit readiness. Multicolor LED indicates fault condition and charging status.
- LED MR16 lamps rated at 50,000 hour life expectancy
- Available without integral lamp heads for added run time or remote capacity operation.

Operating Temperature Range:

Standard models: 20°C to 30°C (68°F to 86°F)
Damp location models: 10°C to 40°C (50°F to 104°F)

Power consumption for LZ2 and LZ15
Maximum: 4.0W, 120VAC or 277VAC **Normal:** 1.3W, 120VAC or 277VAC

Power consumption for LZ30

	Lead-Acid Battery	
	6 Volt	12 Volt
Maximum	14W	14.0W
Normal	1.8W	2.0W

DIMENSIONS

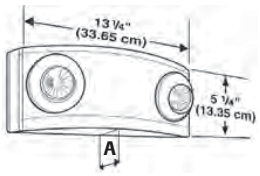

A
Standard size (LZ2, LZ15) depth is 3.625" (9.2cm).
LZ30 model depth is 5.125" (13cm).

APPLICATION DATA

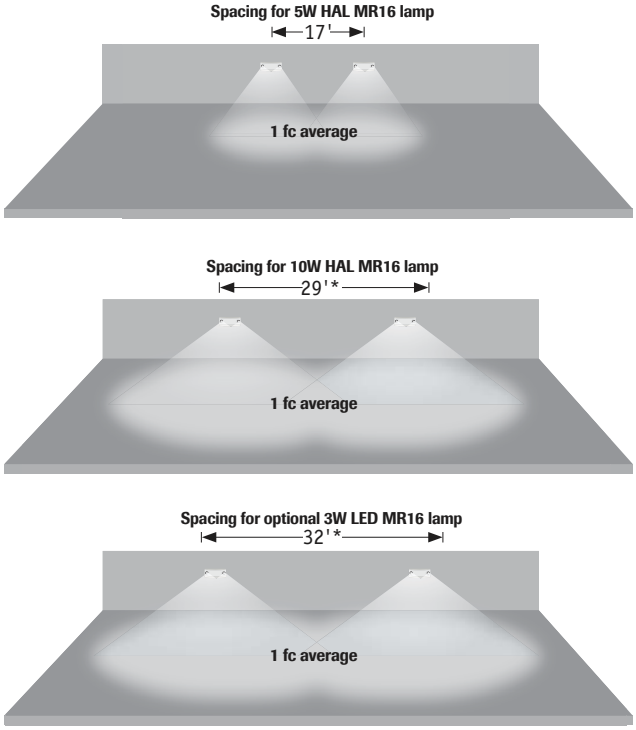

Meets Life Safety Code minimum illuminance of 0.1 fc and average illuminance of 1.0 fc. Assumes open space with no obstructions, mounting height of 7.5', ceiling height of 9' and reflectances of 80/50/20 on a 3' path. Photometry files available on the Dual-Lite web site (www.dual-lite.com).
* Due to limitations in aiming

Copyright © Dual-Lite, a division of Hubbell Lighting, Inc., All Rights Reserved
Specifications subject to change without notice. • Printed in U.S.A.

HUBBELL® Lighting

SHA - BLDG REN PHASE II AT ADM. OFFICE

DUAL-LITE®

SE Series
Die Cast Exit Sign

Catalog Number	
Comments	Type

FEATURES

Application
The SE Series offers bright and even LED illumination in an attractive die-cast aluminum housing. Features include UL listing for 2 hour runtime, AC or Emergency operation with optional Spectron® self-test/self-diagnostic circuitry. Special Wording (SW) option also allows for customization of the stencil field to convey important information. Housing designed for quick and easy installation with low energy consumption. Damp location listed. Includes a Vandal/Tamper Resistant (VTR) option. The VTR option includes a polycarbonate faceshield and tamper resistant screws.

Construction
Housing, exit face and matching canopy constructed of high-strength die-cast aluminum. Sign finish is textured white, white with brushed aluminum face, black, or black with brushed aluminum face. Diffuser finish is color-matched silk-screened coating which provides optimized LED light output. Exit face design in single or double face with red or green letters and break-out chevrons. Break-out chevrons are also included with the special worded option. Exit stencil with 6" letters and ¾" stroke.

Installation
Universal mounting (wall, ceiling, end) to standard 3½" or 4" octagon or square electrical box by use of easily removed, template configured knockouts. Cast aluminum canopy and universal mounting plate included. All mounting hardware is fully concealed.

Illumination
Exit face illumination is provided by energy savings, long life red or green LEDs. Exceeds UL 924 requirements for brightness and uniformity. 10 year LED life.

Compliances
UL 924 Listed (Meets 1998 brightness and uniformity requirements)
UL Damp Location Listed
NFPA 70
NFPA 101
U.S. Patents No. 6,050,013 and 6,082,031

Warranty
Unit and electronics: 5 years full.

ACCESSORIES

FCM-R	Kit converts AC red letter models to emergency operation
FCM-G	Kit converts AC green letter models to emergency operation
PMCW	12 ½" Pendant mounting kit (white)
PMCB	12 ½" Pendant mounting kit (black)
WGLX	Wire guard (Wall mount)
WGLXC	Wire guard (Ceiling mount)
WGLXE	Wire guard (End mount)
VRS3	Vandal resistant shield

ORDERING GUIDE

SE –

MODEL	FACES	LETTER COLOR	FINISH	OPERATION	SELF-DIAGNOSTIC	OPTIONS
	S Single		**W** White	**BLANK** AC only	**Blank** None	**SW** Special Wording[7]
	D Double*	**R** Red	**B** Black	**E** Emergency	**I** Spectron® self-testing/ self-diagnostic electronics*	**2C** 2 Circuit Operation [2,5]
		G Green	**WN** White with brushed face			**FAP** Fire alarm panel interface [1,3,5,6]
			BN Black with brushed face			**FM** Flasher module[1,6]
						AF Audble flasher module [1,6]
						DC Remote DC operation [2,4,5]
						24K 220-240VAC, 60Hz. operation
						VTR Vandal/tamper resistant option [8]
						LRBB Sign assembly less rough-in back box - SERS only

* For use with emergency models only.

(1) For use with Spectron® self-diagnostic models only.
(2) For use with AC models only.
(3) Operates with 24-volt AC or DC fire alarm panels.
(4) For emergency illumination of sign from remote 6-24 VDC power sources.
(5) -DC option may not be specified with -2C or -FAP options.
(6) -AF, -FM and -FAP options may not be specified together.
(7) Enter Special Wording choice from page 959: example SW10. Not available with SEMR or SERS models.
(8) Provides polycarbonate face shield and tamper-proof screws. Meets UL listing requirements for floor proximity use.

HUBBELL® HUBBELL Lighting

SHA - BLDG REN PHASE II AT ADM. OFFICE

DUAL LITE®

SE Series
Die Cast Exit Sign

SPECIFICATIONS

Electronics

Available with AC, emergency and Spectron® self-test/ self-diagnostic electronics option. Emergency and self-diagnostic models equipped with isolation transformer and fully automatic constant current solid state charger with sealed maintenance-free nickel-cadmium battery. All emergency models with 2-hour minimum run-time. All components mounted inside housing. Includes test switch and AC-on indicator. Transient/ surge protection, low voltage disconnect and AC lock-out features included. Battery re-charge within UL time standards. Includes pre-stripped AC input pigtail leads.

Power Consumption

Model	120VAC	277VAC
Red AC Only	2.6 Watts	2.6 Watts
Green AC Only	2.1 Watts	2.1 Watts
Red Emergency	3.8 Watts	3.8 Watts
Green Emergency	3.5 Watts	3.5 Watts

* Wattage figures include LED lamps, transformer and electronics power requirements. LED lamp assemblies (red or green) consume less than 1 watt.

Power Factor, Average: .8 (lagging)

Battery Type: Maintenance-free sealed nickel cadmium battery

AC Input: 120/277VAC, 60 Hz. (all models)

Operating Temperature Range: 0°C to 40°C (32°F to 104°F)

DIMENSIONS

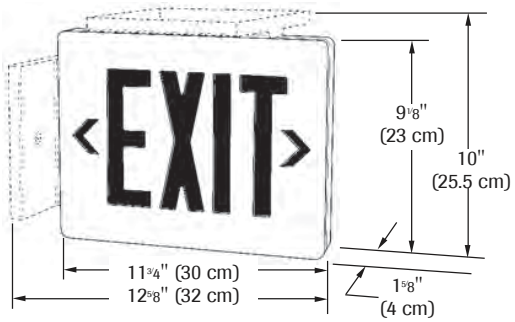

SHA - BLDG REN PHASE II AT ADM. OFFICE

DUAL LITE®

SE Series
Special Wording

STANDARD SIGNS

Dual-Lite's cast-aluminum SE Series exit signs feature an option for custom or standard special-wording. The images below represent a sample of standard special-worded signs available. A comprehensive list of all standard special-wording signs is shown on the next page. Because the artwork and silk-screening for these signs were previously developed, pricing for these standard special-worded signs do not incur a setup charge. If your special-worded requirements do not show up on this list, please contact the factory to request your custom special-worded sign. Custom special-worded signs will incur a one time setup charge for each development.

SW65 (Makhraj Arabic)

SW10

SW13

SW40

SW47

SW5

SW101

SW7

SW97

SW22

SW31

SW45

SW37

SW98

SW9

SW30

SW69

SW48

SW73

SW4

NOTE: Special worded signs do not meet letter size requirements of UL 924.

SHA - BLDG REN PHASE II AT ADM. OFFICE

Copyright © Dual-Lite, a division of Hubbell Lighting, Inc., All Rights Reserved
Specifications subject to change without notice. • Printed in U.S.A. • 0601835

HUBBELL® Lighting

DUAL LITE®

SE Series
Special Wording

STANDARD SPECIAL WORDING SIGNS

CATEGORY	SPECIAL WORDING NUMBER		DESCRIPTION
EXIT	SW	1	TO EXIT
	SW	2	NOT AN EXIT
	SW	22	EXIT W/ WHEELCHAIR SYMBOL
	SW	37	NO EXIT
	SW	42	EMERGENCY EXIT ONLY
	SW	63	WHEELCHAIR SYMBOL/ EXIT
	SW	67	EMERGENCY EXIT
	SW	70	FIRE EXIT ONLY
	SW	73	TO FIRE ESCAPE
AREAS/ALERTS	SW	5	DARKROOM IN USE
	SW	9	ON AIR
	SW	27	QUIET
	SW	29	PERFORMANCE IN PROGRESS
	SW	44	IMAGE ACQUISTION
	SW	52	STUDIO IN USE
	SW	55	BATTERY CHARGING IN PROCESS
	SW	61	UNCLEARED VISITORS
	SW	68	STAND BY ON AIR
	SW	80	TV STUDIO IN USE
	SW	85	JURY IN SESSION
	SW	88	DARKROOM IN USE/DO NOT ENTER
	SW	96	L CLEARED / IN AREA
	SW	100	CLASSIFIED/BREIFING
	SW	102	UNCLEAR/VISITOR IN AREA
	SW	103	ON THE AIR w/ SYMBOL
	SW	109	JUVENILE IN CELL
	SW	111	MEETING IN PROGRESS
	SW	115	RECORDING
	SW	121	QUIET PLEASE/SLEEP STUDY IN PROGRESS
	SW	128	INTERVIEW IN PROGRESS
	SW	129	SIMULATOR/IN USE
	SW	131	RANGE/IN USE
	SW	133	COURT/IN/SESSION
	SW	134	STAND/BY
	SW	135	VISITOR
	SW	156	ON AIR/STUDIO ONE
	SW	157	ON AIR/STUDIO TWO
	SW	158	ON AIR/STUDIO THREE
	SW	159	RECORDING ROOM IN USE
	SW	162	THE MAGNET IS ON
	SW	163	WAITING AREA
	SW	164	Brief in Progress
	SW	171	WARNING HAZARD
	SW	172	LIVE FIRING IN PROGRESS
	SW	173	QUIET/COURT IN SESSION
	SW	174	OPEN
	SW	176	PATIENT WAITING
	SW	179	OCCUPIED
	SW	181	WHEELCHAIR ACCESS ICON
DANGER/ALERTS	SW	6	CAUTION
	SW	47	DANGER
	SW	137	OSPA/ASSISTANCE/NEEDED

CATEGORY	SPECIAL WORDING NUMBER		DESCRIPTION
EVACUATION	SW	10	AREA OF REFUGE
	SW	11	AREA OF REFUGE WITH WHEELCHAIR SYMBOL
	SW	12	AREA OF RESCUE ASSISTANCE
	SW	13	AREA OF RESCUE ASSISTANCE WITH WHEELCHAIR SYMBOL
	SW	14	ELEVATOR
	SW	24	CAUTION STAIRS
	SW	25	NOT AN AREA OF REFUGE
	SW	40	AREA OF RESCUE
	SW	48	STAIRS
	SW	79	TO AREA OF RESCUE ASSISTANCE
	SW	97	EMERGENCY ASSISTANCE
	SW	117	TO AREA OF REFUGE
	SW	122	AREA OF REFUGE ASSISTANCE
	SW	123	UP
	SW	124	DOWN
	SW	132	RED CROSS (SYMBOL ONLY)
INTERNATIONAL EXIT	SW	32	EXIT/SALIDA
	SW	41	ARABIC/EXIT
	SW	64	ARABIC/EXIT
	SW	65	MAKHRAJ ARABIC/EXIT
	SW	66	ARABIC/EXIT
	SW	69	SALIDA
RESTROOMS/ FACILITIES	SW	15	RESTROOMS
	SW	16	MEN
	SW	17	MEN WITH SYMBOL
	SW	18	WOMEN
	SW	19	WOMEN WITH SYMBOL
	SW	54	PHONE
	SW	91	DECORATIVE CROSS SYMBOL
	SW	92	NON SMOKING
	SW	98	NO SMOKING
	SW	118	WHEELCHAIR (SYMBOL ONLY)
ON/OFF	SW	50	GENERATOR ON
	SW	75	FAN OFF
	SW	82	EMERGENCY POWER ON
	SW	84	CITY WATER BACKUP ON
	SW	106	READY ON
	SW	108	READY
PEDESTRIANS/ CROSSING	SW	160	BEAM READY
	SW	78	CAUTION WATCH FOR PEDESTRIANS

CATEGORY	SPECIAL WORDING NUMBER		DESCRIPTION
LABORATORY	SW	4	X-RAY IN USE
	SW	20	WARNING LASER ON
	SW	21	BEAM ON
	SW	23	CAT SCAN IN USE
	SW	26	MRI ROOM IN USE
	SW	28	MRI IN USE
	SW	31	LASER IN USE
	SW	33	LASER ON DO NOT ENTER
	SW	34	MAGNET ON
	SW	36	UV LIGHTING IN USE
	SW	38	CLOSE HOODS
	SW	39	RADIATION ON
	SW	43	DANGER BIO HAZARD IN USE
	SW	45	MAGNET IN USE
	SW	46	LASER LAB IN USE
	SW	49	X-RAY ON
	SW	51	CAUTION X-RAY
	SW	53	BEAM ON DO NOT ENTER
	SW	56	FIRE
	SW	57	CT IN USE
	SW	58	OPEN LASER
	SW	62	RADIATION IN USE
	SW	71	X-RAY
	SW	72	X-RAY OFF
	SW	83	MAGNET AT FIELD
	SW	87	BEAM IN USE
	SW	89	CRYOSTAT MAGNET IN USE
	SW	93	LASER ENABLED
	SW	105	CT SCAN/IN USE
	SW	107	DANGER
	SW	112	X-RAY IN USE/DO NOT ENTER
	SW	113	MAGNET/RAMPED
	SW	116	SCANNER IN USE
	SW	120	UV/RADIATION
	SW	125	NO ENTRY FUEL CELL WORK IN PROGRESS
	SW	127	RADIATION
	SW	136	RADIATION/SOURCE/EXPOSED
	SW	138	RAYOS-X/ EN USO
	SW	139	RADIATION/WARNING
	SW	140	CT ON/DO NOT ENTER
	SW	141	LINAC/ IN USE
	SW	143	TEST CELL/ IN USE
	SW	145	MRI MAGNET/ IN USE
	SW	146	POLYGRAPH/ IN USE
	SW	147	TEM IN USE
	SW	148	ETEM IN USE
	SW	152	BLAST TUBE
	SW	155	LAB IN USE
	SW	160	BEAM READY
	SW	175	MAGNET ALWAYS ON

NOTE: Special worded signs do not meet letter size requirements of UL 924.

Web: www.dual-lite.com • Tech Support: (866)-313-3909
701 Millennium Blvd. • Greenville, SC 29607 U.S.A.
Copyright © Dual-Lite, a division of Hubbell Lighting, Inc., All Rights Reserved
Specifications subject to change without notice. • Printed in U.S.A.

HUBBELL® HUBBELL Lighting

0601835 06/17

SHA - BLDG REN PHASE II AT ADM. OFFICE