Record Product Data

State Highway Administration

Pr. Frederick Maintenance
Building Reno.

CA1435129

Table of Contents

SP-Section 024119 – Selective Demolition..... 3
SP-Section 042000 – Masonry and Joint Sealant..... 4
SP-Section 051200 - Structural Steel 33
SP-Section 052100 - Steel Joist Framing 34
SP-Section 053100 - Steel Decking..... 36
SP-Section 055000 - Metal Fabrications..... 37
SP-Section 064116 - Architectural Cabinets..... 38
SP-Section 071416 - Waterproofing 39
SP-Section 072100 - Thermal Insulation..... 44
SP-Section 072726 - Fluid-Applied Membrane Air Barriers..... 45
SP-Section 075423 - TPO Roofing 53
SP-Section 076200 - Sheet Metal Flashing and Trim 72
SP-Section 078413 - Fire Sealant..... 81
SP-Section 078446 - Firestopping..... 94
SP-Section 081113 - Hollow Metal Doors and Frames..... 96
SP-Section 087100 - Door Hardware 129
SP-Section 092216 - Non-Structural Metal Framing 157
SP-Section 092900 - Gypsum Board..... 167
SP-Section 095113 - Acoustical Panel Ceilings..... 179
SP-Section 096516 - Resilient Flooring Selection 183
SP-Section 099123 - Painting..... 185
SP-Section 123661 - Solid Surface Countertops..... 195
SP-Section 220000 - Plumbing..... 199
SP-Section 224216 - Plumbing (Sink Only)..... 237
SP-Section 230713 - Duct Insulation 240
SP-Section 233113 - Duct Sealant..... 242
SP-Section 233300 - Fire Dampers..... 243
SP-Section 233113 - Metal Duct..... 244
SP-Section 233346 - Flexible Ducts..... 258
SP-Section 233423 - Power Ventilators..... 260
SP-Section 233713 - Air Diffusers..... 265
SP-Section 238126 - Ductless Split Heat Pump..... 273
SP-Section 260533 - Raceways, Boxes, Conductors and Cables..... 281
SP-Section 260923 - Lighting Control..... 290
SP-Section 262726 – Switches..... 295
SP-Section 262410 – Panelboards, Breakers safety Switches..... 305
SP-Section 265116 - Lighting..... 315

CA1435129-024119.01 - SELECTIVE DEMOLITION

S E Davis Construction, LLC, proposes to do our selective demolition at Prince Frederick SHA in the existing conference / lunch room. During demolition we will remove ceiling tile and grid, drywall and drywall framing, and floor finishes in their entirety. The HVAC, plumbing, and electrical work will be demoed as shown on the demolition drawings. We propose to do the demolition required for the kitchen plumbing from the conference side of the bathroom wall. During demolition, all care will be taken to protect the adjacent offices, ductwork, plumbing and HVAC not to be demoed.

Once the footers and exterior block walls are installed, we will pin the east wall and remove the required masonry work to allow for the installation of the new tube steel hanger beam. Once the beam is in place, the pinning will be removed and the work on the new roof will begin.

While demolition is going on we will temporarily barricade access to this area and no one will be allowed without permission and proper personal protection equipment.

Any existing items to remain will be protected against damage.

Any existing items to be removed and relocated will be stored in a sea container for their protection until they are needed.

All debris will be put in a dumpster and removed off-site at the appropriate time.

S E Davis Construction will provide temporary fire protection by way of fire extinguishers and will clean the site at the end of each day.

Lacey Construction, Inc.

P.O. Box 669, 42284 Riva Ridge Drive
Hollywood, Maryland 20636
Phone 301-373-3167
Fax 301-373-4329

Project: SHA Prince Frederick Shop
Location: Prince Frederick, Maryland
General Contractor: S.E. Davis Construction
Architect: Whitman, Requardt and Associates
Date: July 20, 2017

Masonry Submittals

	Product:	Description:
1	Cover Sheet	
8	Glen-Gery 250M MS FL Unfrg Modular Brick	Face brick
2	Workrite WR-2320 Type S Colored PCL Blend	Brick mortar
2	York Normal Weight CMU	Gray block
1	Lehigh Type S PCL Mortar	Block mortar
1	Amerimix AMX 600 Coarse Grout	3,000 psi block fill grout
1	H&B C-Fab Flashing	Thru wall flashing
1	H&B Stainless Steel Corners & End Dams	Flashing accessories
3	H&B HB Sealant	Multi-purpose sealer
1	H&B Mortar Trap 1"	Flashing drainage material
1	H&B Quadro-Vent (Standard Size / Buff Color)	Weep vents at flashing
1	H&B Closed Cell Neoprene Sponge	Brick control joint material
1	H&B RS Series Standard Rubber Control Joint	Block sash control joint material
1	H&B 270-ML Ladder Adjustable Eye-Wire	Joint reinforcement
1	H&B 344 – Rigid Partition Anchor	Block anchor ties
3	Foamular 250 Extruded Polystyrene (XPS)	2" Rigid Foam Insulation Board

Glen-Gery Corporation
Technical Services / Research
433 South Pottsville Pike
Shoemakersville, PA 19555
610-562-3076
Fax: 610-562-2084
http://www.glengerybrick.com

July 18, 2017

A.G. Hungerford & Son, Inc.
12165 Rock Point Road
Newburg, MD 20664

REFERENCE: SHA Prince Frederick Shop Phase 2 Renovation
Whitman, Requardt and Associates
S.E. Davis Construction, LLC.
A.G. Hungerford & Son, Inc.

To Whom it May Concern:

This letter certifies that the 250M MS FL Unfrg Modular brick as manufactured by the Mid-Atlantic plant for the above referenced project will meet or exceed ASTM Designation C216, the Standard Specification for Facing Brick, Grade SW, Type FBS.

Glen Gery tests all brick bodies every 18 months. The 250M MS FL Unfrg Modular brick manufactured by the Mid-Atlantic plant is a Mid-Atlantic Shale Molded brick body and attached is a test report conducted by an independent, AASHTO accredited laboratory confirming that it meets or exceeds the specification of ASTM C216, Grade SW, Type FBS.

Should you require any additional information, please contact your Glen-Gery representative. Thank you for your interest in Glen Gery's line of fine quality products.

Sincerely,
Glen-Gery Corporation

Mike Krzyzanowski
Technical Services Manager

This Certification Provided for: SHA Prince Frederick Shop Phase 2 Renovation

ACCREDITED
Testing Laboratory

CLEMSON
UNIVERSITY
THE BISHOP MATERIALS LABORATORY

AASHTO R18
ACCREDITED LABORATORY

TEST REPORT

100 Clemson Research Blvd.
Anderson, SC 29625
(864) 656-1094
Fax: (864) 656-1095
www.brickandtile.org

Results of Tests on Brick conducted in accordance with ASTM C67-14 Standard Method for Sampling and Testing Brick and Structural Clay Tile

01/17/2017

Name:	Glen-Gery Corporation 433 S. Pottsville Pike Shoemakersville , PA 19555	Plant:	Mid-Atlantic	*Temperature: 60 - 90F
		Report Number:	GGMA-0837	*Humidity: 30% - 70%
Phone:	610-562-3076	Received Date:	09/17/2015	
Fax:	610-562-2084	Sampled Date:	09/11/2015	
		Lot:	09505DA	
		Product Code:	72502200	

Sample Description: **Mid-Atlantic Shale Molded, Face Brick, Machine Molded**

								Test Date
Absorption		**1**	**2**	**3**	**4**	**5**	**Average**	
24 Hour Submersion in Cold Water (%)		5.60	5.61	6.39	6.45	7.47	6.30	09/21/2015
5 Hour Submersion in Boiling Water (%)		9.15	9.11	9.89	9.97	11.10	9.84	
Saturation Coefficient (Ratio of 24H to 5H)		0.61	0.62	0.65	0.65	0.67	0.64	
Compressive Strength		**1**	**2**	**3**	**4**	**5**	**Average**	
	psi	7,332	7,411	6,346	8,062	7,722	7,375	09/21/2015
	MPa	50.6	51.1	43.8	55.6	53.2	50.8	
Efflorescence		**11**	**12**	**13**	**14**	**15**		
		Not Effloresced	Not Effloresced	Not Effloresced	Not Effloresced	Not Effloresced		09/29/2015
IRA (Oven Dried Method)		**6**	**7**	**8**	**9**	**10**	**Average**	
	g/min/30 in.²	22.0	23.6	27.1	23.1	23.8	23.9	09/21/2015
Abrasion Resistance		**1**	**2**	**3**	**4**	**5**	**Average**	
		0.08	0.08	0.10	0.08	0.10	0.09	09/21/2015

The brick represented by the test results shown here comply with the physical property requirements of the standards listed below:

ASTM C 216 - 16 Standard Specification for Facing Brick (Solid Masonry Units Made From Clay or Shale)
Grade: SW, MW

ASTM C 32 - 13 Standard Specification for Sewer and Manhole Brick (Made From Clay or Shale)
Grade: SM, / MM, MS

ASTM C 62 - 13a Standard Specification for Building Brick (Solid Masonry Units Made From Clay or Shale)
Grade: SW, MW, NW

ASTM C 902 - 15 Standard Specification for Pedestrian and Light Traffic Paving Brick
Class: SX, MX, NX, with **Molded Brick Alternate 5.1.5**

Type: I, II, III

CAN/CSA-A82-06 Fired masonry brick made from clay or shale
Grade: IG, EG

Michael Walker, Quality Manager

**The temperature and humidity of the Bishop Materials Laboratory is constantly kept between 60 -90F, and 30-70% RH*

The results shown above apply only to the samples tested, which are provided by the customer.
This test report shall not be reproduced except in full, without written approval of the laboratory.

Lab Reference: 6527.13265

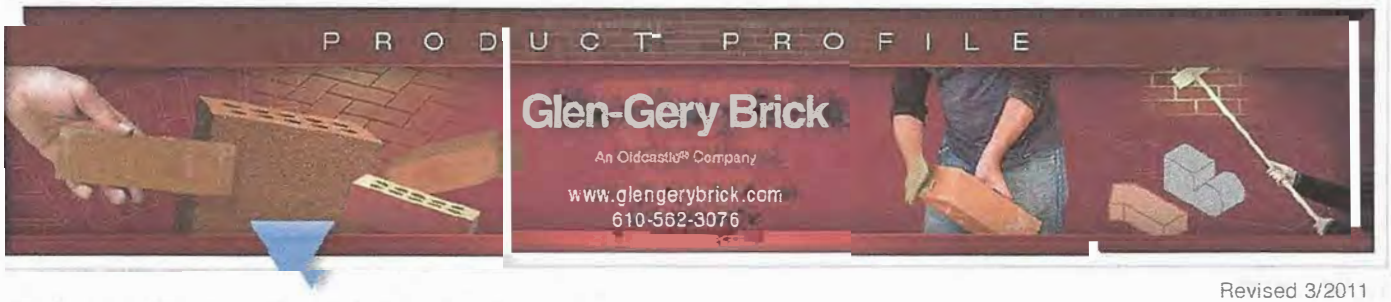

Revised 3/2011

Glen-Gery Molded Brick

General

Glen-Gery manufactures molded bricks in a multitude of shades to accommodate the visual requirements of most projects. Glen-Gery molded bricks have a nominal four inch bed depth.

Unit Specifications

Glen-Gery molded bricks are typically manufactured to conform to the requirements of American Society for Testing and Materials (ASTM) Standard Specification C 216, Grade SW, Type FBS and all grades of ASTM C 62. These products also conform to the requirements of ASTM C 216, Grade MW. Certain products meet the requirements of ASTM C 216, Type FBA, ASTM C 902, or ASTM C 32. Inquiries should be made for specific applications or conformance to standards other than ASTM C 216 or C 62. When specifying this product, the specifications should cite:

1) The product name and state "as manufactured by Glen-Gery Corporation."

2) Conformance to the requirements of the appropriate standard, (typically, ASTM C 216).

3) The actual unit dimensions listed as thickness x height x length.

Example: 53DD as manufactured by Glen-Gery Corporation to conform to the requirements of ASTM C 216, Grade SW, Type FBS. The units shall have dimensions of 3-5/8" X 2-1/4" X 7-5/8".

Brick Positions in a Wall

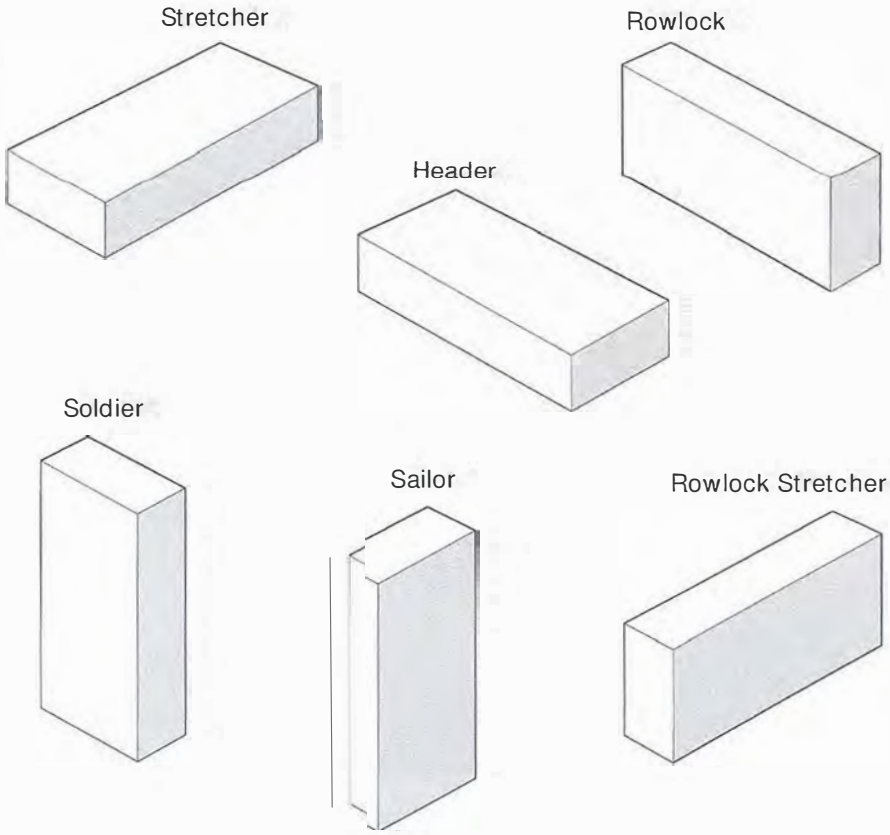

Glen-Gery Brick Sizes

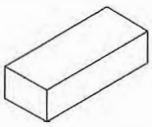

Modular
3-5/8 x 2-1/4 x 7-5/8
6.75 units/sq. ft.

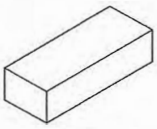

Standard
3-5/8 x 2-1/4 x 8
6.55 units/sq. ft.

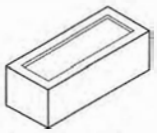

Engineer Modular
3-5/8 x 2-3/4 x 7-5/8
5.63 units/sq. ft.

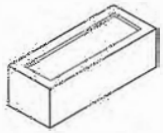

Engineer Standard
3-5/8 x 2-3/4 x 8
5.39 units/sq. ft.

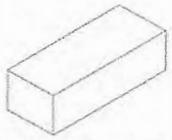

Handmade Oversized
4 x 2-3/4 x 8-1/2
5.00 units/sq. ft.

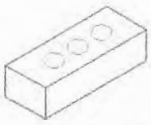

Lightweight Modular
3-1/2 x 2-1/4 x 7-5/8
6.75 units/sq. ft.

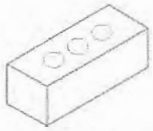

Lightweight Engineer Modular
3-1/2 x 2-3/4 x 7-5/8
5.63 units/sq. ft.

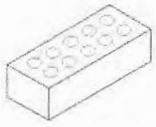

Modular
3-5/8 x 2-1/4 x 7-5/8
6.75 units/sq. ft.

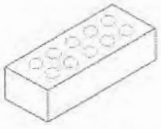

Standard
3-5/8 x 2-1/4 x 8
6.55 units/sq. ft.

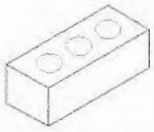

Engineer Modular
3-5/8 x 2-3/4 x 7-5/8
5.63 units/sq. ft.

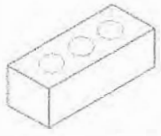

Engineer Standard
3-5/8 x 2-3/4 x 8
5.39 units/sq. ft.

Queen
3 x 2-3/4 x 7-5/8
5.63 units/sq. ft.

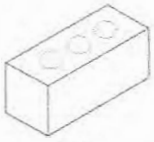

Econo
3-5/8 x 3-5/8 x 7-5/8
4.50 units/sq. ft.

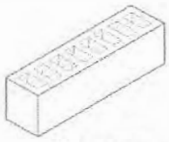

Engineer King
2-13/16 x 2-13/16 x 9-5/8
4.55 units/sq. ft.

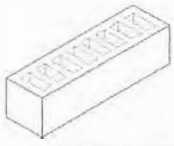

King Narrow-Bed
3-1/8 x 2-3/4 x 9-5/8
4.55 units/sq. ft.

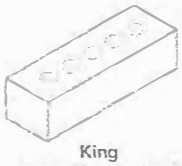

King
3-5/8 x 2-3/4 x 9-5/8
4.55 units/sq. ft.

Roman
3-5/8 x 1-5/8 x 11-5/8
6.00 units/sq. ft.

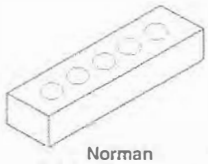

Norman
3-5/8 x 2-1/4 x 11-5/8
4.50 units/sq. ft.

Kingston
3-5/8 x 2-3/4 x 11-5/8
3.75 units/sq. ft.

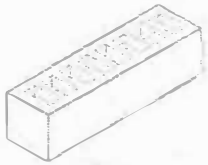

Utility
3-5/8 x 3-5/8 x 11-5/8
3.00 units/sq. ft.

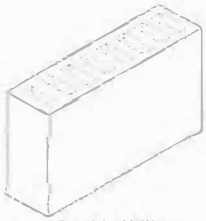

Double Utility
3-5/8 x 7-5/8 x 11-5/8
1.50 units/sq. ft.

Saxon
3-5/8 x 2-1/4 x 15-5/8
3.38 units/sq. ft.

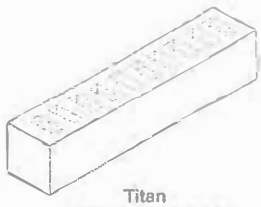

Titan
3-5/8 x 3-5/8 x 15-5/8
2.25 units/sq. ft.

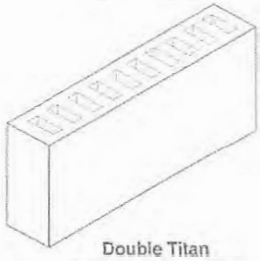

Double Titan
3-5/8 x 7-5/8 x 15-5/8
2.25 units/sq. ft.

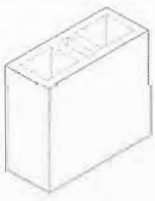

8-Square
3-5/8 x 7-5/8 x 7-5/8
2.25 units/sq. ft.

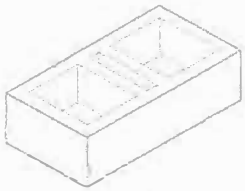

Regent
7-5/8 x 3-5/8 x 11-5/8
3.00 units/sq. ft.

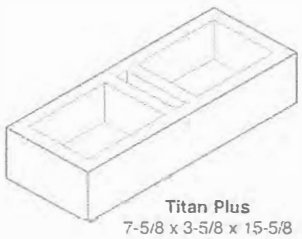

Titan Plus
7-5/8 x 3-5/8 x 15-5/8
2.25 units/sq. ft.

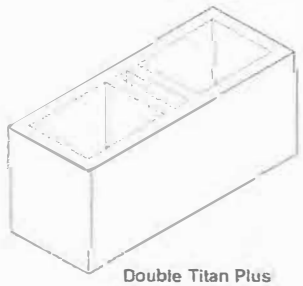

Double Titan Plus
7-5/8 x 7-5/8 x 15-5/8
1.13 units/sq. ft.

Coring and frogs are at the manufacturer's option. Actual coring patterns may not match the illustrations. Contact plant for specific information on sizing and coring.

TABLE 1
Brick Size, Coverage and Weight

Brick Size	Specified Dimension						Brick per square foot	Average Weight	
	Thickness (inches)	(mm)	Height (inches)	(mm)	Length (inches)	(mm)		per unit	(kg)
Modular Frogged	3-5/8	92	2-1/4	57	7-5/8	194	6.75	4.1	1.9
Modular Unfrogged	3-5/8	92	2-1/4	57	7-5/8	194	6.75	4.7	2.1
Standard Unfrogged	3-5/8	92	2-1/4	57	8	203	6.55	4.9	2.2
Engineer Modular Frogged	3-5/8	92	2-3/4	70	7-5/8	194	5.63	5.2	2.4
Engineer Standard Frogged	3-5/8	92	2-3/4	70	8	203	5.39	5.5	2.5

Design Criteria

Size:

Table 1 provides the many sizes in which Glen-Gery manufacturers molded brick.

Dimensional Tolerances:

Glen-Gery molded bricks are manufactured to provide specific dimensional tolerances. The dimensional tolerances of the product are intended to be within the requirements of ASTM C 216, Type FBS for general use. The product ordered will generally contain a number of units which are over or under the specified dimensions. The dimensional variations are related to the raw materials, forming, drying and firing processes, and the desired finish and color. Thus, for some products, all the units may be slightly over or slightly under the specified dimensions. Inquiries should be made regarding the dimensional variations which might be expected if project detailing requires precise coursing. Specialty products or gauged products may be desirable for such applications.

Configurations:

These units are manufactured to conform to the requirements of applicable ASTM standards. Some molded brick contain recessed panels on the sanded bedding surface called "frogs." The aggregate void space of such frogs is less than twenty-five percent of the gross cross-sectional area in every plane parallel to the bearing surface and the brick are therefore considered to be solid units (as per ASTM C216). Bricks may be provided as frogged units or one hundred percent solid (unfrogged) units.

If a particular type of unit is required, inquiries should be made regarding availability of the specific product desired.

Weight:

The weight of the brick units varies with the raw material, size, manufacturing processes, and the presence or absence of frogs. While actual weight of specific brick should be confirmed, average weight of each size molded brick manufactured by Glen-Gery is included in Table 1.

Finishes:

Glen-Gery molded bricks are often referred to as 'sand struck' meaning that sand is used as a lubricant to release the clay from the molds and as a way to provide different colors. These "sand-struck" brick are produced with varying degrees of sand on all surfaces except one bedding surface.

Color:

Glen-Gery molded brick are available in a multitude of colors and blends. Along with the color of the bodies of the bricks, the sands applied to five of the faces during manufacture give molded bricks their intriguing colors. The appearance of molded bricks is also affected by the size of the sand particles. The availability of a particular finish is usually dependent on the specific product.

Shapes:

Standard brick shapes are dimensioned to course properly with nominal 4"-thick brick sizes. While the 'standard' brick shapes are described in the Glen-Gery Standard Shapes Catalog, "Brick Shapes", they are not stock items. Typical molded brick shapes, as described in the catalogue, include various configurations of bullnose, watertable, corner, radial, shelf angle, sill, and coping units.

Shapes dimensioned for coursing with other brick sizes, and shapes having configurations to fit specific project requirements are also available. These nonstandard shapes require detailed dimension drawings which must be submitted to and approved by Glen-Gery. In order to achieve the effects desired by the designer, some shape designs may require coring which does not meet the requirements of ASTM C 216.

All shapes should be identified early in the project design because certain shape configurations may require special forming, drying, or firing processes. These processes may require more time or different scheduling than the non-shape brick.

Physical Properties of Units

Compressive Strength:

Average gross compressive strength of machine molded brick exceeds 3,000 psi when tested with the loads applied normal to the bedding surface. Typically, the average compressive strength exceeds 4,000 psi and may be as high as 5,000 psi for brick manufactured to meet ASTM C216. The actual compressive strength depends upon the specific product and size selected.

Water Absorption:

The average maximum hot-water absorption by submersion in boiling water for five hours is less than 17% and will typically be less than 15% for machine molded brick. The average saturation coefficient is generally less than 0.65.

Initial Rate of Absorption (IRA):

The initial rate of absorption (suction) normally does not exceed 30 grams per 30 square inches per minute under laboratory conditions. However, brick can be checked on the site to determine if wetting is necessary prior to laying unless familiarity with the product has demonstrated that wetting is not required. The procedure for determining wetting requirements is the field test procedure described in ASTM C 67. If this test is not practical, the need for wetting may be estimated by the following field test:

1) Place a $.25 piece on a bearing surface of a typical unit.

2) Draw a ring around the quarter with a wax pencil.

3) Place twenty drops of water within the ring.

4) If unabsorbed water remains after 1-1/2 minutes, the units likely do not require wetting. If all the water is absorbed into the unit, the units should be wetted prior to laying.

Properties of Walls

Compressive Strength:

The minimum assumed compressive strength for a brick wall, using good workmanship and ASTM C270 Type N mortar, is 1,000 psi. Assemblies constructed with most Glen-Gery molded bricks manufactured to meet ASTM C216 will provide a minimum assumed compressive strength of 1,750 psi, when used with good workmanship and Type N mortar. Reference: Specification for Masonry Structures (TMS 602/ACI 530.1/ASCE 6).

Thermal Performances:

The thermal resistivity of Glen-Gery molded brick is approximately 0.11 (hr • sq. ft.• deg f)/(Btu• in.). A nominal four-inch wythe, excluding air films, will provide a thermal resistance of approximately 0.40 (hr • sq. ft.• deg f)/ (Btu). The thermal resistivity is used to predict the thermal performance of wall elements under steady-state conditions. The mass and specific heat of this product provide additional benefit when subjected to the dynamic conditions of the natural environment. As described in the American Society of Heating Refrigerating and Air-Conditioning Engineers (ASHRAE) Standard 90.1, the effects of mass, specific heat, and the color of the brick should be considered. Reference: BIA Technical Notes on Brick Construction 4 Revised, "Heat Transmission Coefficients of Brick Masonry Walls", 4B Revised, "Energy Code Compliance of Brick Masonry Walls" and 43D, "Brick Passive Solar Heating Systems, Part IV – Material Properties."

Sound Transmission:

A nominal four-inch wythe of brick masonry has a sound transmission classification (STC) of approximately 45. Reference: BIA Technical Notes on Brick Construction 5A, "Sound Insulation – Clay Masonry Walls."

Fire Resistance:

Fire resistance ratings are directly related to wall assembly including the equivalent thickness of masonry. For example: A nominal 4-inch wythe of clay masonry alone provides a one hour fire rating. Fire ratings can be determined through Testing (per ASTM E119) or calculated in accordance with the International Building Code (IBC) or Code Requirements for Determining Fire Resistance of Concrete Masonry Construction Assemblies ACI 216.1/TMS 0216. Reference: BIA Technical Notes on Brick Construction 16 Revised, "Fire Resistance of Brick Masonry."

Coefficient of Thermal Expansion:

Brick walls constructed of Glen-Gery molded brick have a coefficient of thermal expansion of approximately 0.000004 in. (in.• °F) as listed in The Building Code Requirements for Masonry Structures (TMS 402/ACI 530/ASCE 5) . A one hundred foot length (or height) of wall constructed of Glen-Gery molded brick, and exposed to an annual extreme temperature difference of 100 °F, is expected to experience a total thermal movement of approximately one-half inch.

TABLE 2

Brick and Mortar Quantities[1]

Nominal 3/8 Inch Mortar Joints

Brick Size	Vertical Coursing in courses per inch	Units per square foot	Cubic Foot per 100 square foot	Quantity of Mortar per 1000 units
Modular Frogged	3 Courses per 8"	6.75	5.46	8.10
Modular Unfrogged	3 Courses per 8"	6.75	5.46	8.10
Standard Unfrogged	3 Courses per 8"	6.55	4.12	6.29
Engineer Modular Frogged	5 Courses per 16"	5.63	4.79	8.52
Engineer Standard Frogged	5 Courses per 16"	5.39	4.75	8.81

[1] These values are actual quantities and must be increased for waste and any possible construction requirements which may necessitate additional quantities.

Coefficient of Moisture Expansion:

The coefficient of moisture expansion of Glen-Gery molded brick veneer is less than 0.0006 in./in. Although most of the moisture expansion of Glen-Gery molded brick occurs immediately after the brick are fired, before the brick arrive at the job site, the maximum design moisture expansion of one-hundred foot long (or high) wall constructed of these products is less than five-eighths of an inch.

Construction

Storage and Protection:

Store brick off ground to avoid contamination by water, mud, dust or materials likely to cause staining or other defects. Do not use cubes of brick as supports or work surfaces. Cover units with a weather resistant membrane held securely in place or otherwise protect units from the elements.

Wetting:

As deemed necessary(see IRA), wet units prior to laying. Wetting typically consists of saturating the units three to twenty four hours before laying the units. Units should be saturated but surface dry when laid.

Weather Extremes:

Follow the procedures required by The International Building Code (IBC) references cold and hot weather construction provisions for masonry that are based on those found in Specification for Masonry Structures (TMS 602/ACI 530.1/ASCE 6) and required by Building Code Requirements for Masonry Structures (TMS 402/ACI 530/ASCE 5). While specific cold and hot weather provisions are not included within the International Residential Code (IRC) the IRC states that mortar for use in masonry construction shall comply with ASTM C 270, which requires mortar for other than masonry veneer to be prepared in accordance with the Masonry Industry Council's "Hot and Cold Weather Masonry Construction Manual." Further information is also available in the BIA Technical Notes on Brick Construction 1, "Cold and Hot Weather Construction."

Installation:

Place units in full mortar joints, taking special care to assure that the head joints are full. Use a Portland cement lime mortar conforming to ASTM C 270. A prepackaged mortar mix conforming to these specifications is Glen-Gery Color Mortar Blend. Reference: Glen-Gery Product Profile "Glen-Gery Color Mortar Blend."

Tooling:

When thumbprint hard, tool all joints to produce a concave, grapevine, or vee joint finish.

Protection of Work:

At the end of each day and at the beginning of each shut down period, cover all work with a strong weather resistant membrane which is held in place securely. Scaffold boards closest to the wall should be tilted up at days end to prevent splatter during rain. Care should also be taken to protect brickwork located near the ground from mud and dirt.

Cleaning:

Tips to reduce the need for cleaning:

- Protect the base of the wall from mortar or mud splatter by spreading plastic sheets, straw or other protection on the ground adjacent to the wall and 2-3 ft. up the face of the wall.
- Scaffolding should be set far enough away from the wall to allow mortar droppings to fall to the ground.
- At the end of each shift, remove excess mortar with a stiff bristle brush. Clean with wooden paddles and stiff fiber brushes using clean water.

If a cleaning agent is necessary, presoak the wall with clean water prior to applying the cleaning agent and thoroughly rinse the wall with clean water after cleaning. Prior to determining a final cleaning solution, test the procedure and cleaning agent on a small sample area to observe the effectiveness of the overall cleaning solution and, most importantly, to detect any possible deleterious effects or changes in appearance of the brick. Additional information is available in the Glen-Gery Technical Profile "Cleaning New Brickwork." Some Handmade bricks should not be cleaned; Check with your Glen-Gery Distributor or District Sales Manager prior to making a final selection of a cleaning procedure and solution. Reference: BIA Technical Notes on Brick Construction 20, "Cleaning Brickwork."

TABLE 3

Units Per Linear Foot in Various Positions

Nominal 3/8 Inch Mortar Joints

Brick Size	Stretcher	Rowlock	Soldier	Header
Modular Frogged	1.50	4.50	4.50	3.00
Modular Unfrogged	1.50	4.50	4.50	3.00
Standard Unfrogged	1.43	4.50	4.50	3.00
Engineer Modular Frogged	1.50	3.75	3.75	3.00
Engineer Standard Frogged	1.43	3.75	3.75	3.00

Estimating:

The quantities of brick and mortar required for a project vary with the size of the brick unit, the wall construction, the number of field cuts necessary and the workmanship. Table 2 provides the quantities of brick and mortar quantities per 1,000 brick units. The figures are based on the units being placed in the wall as stretchers in stack or running bond. The quantities are provided for a single wythe of brickwork. Additional information regarding mortar or grout for collar joint or grouted applications can be found in the referenced BIA Technical Notes. The values provided are estimates of the quantities in the finished wall and do not account for waste. The values provided in Table 3 may be useful in approximating the number of units for caps, sills, bands, etc. These values represent the actual number of units per linear foot for the various brick sizes placed on the four most frequently used positions in the wall. The values are based on a nominal three-eighth inch mortar joint.

Reference: BIA Technical Notes on Brick Construction 10,"Dimensioning and Estimating Brick Masonry."

For further information contact:
Glen-Gery Technical Services
423 South Pottsville Pike
Shoemakersville, PA 19555
(610) 562-3076
glengerytech@oldcastleapg.com

Glen-Gery Brick
An Oldcastle® Company

Brick Centers

Iowa
Glen-Gery Brick Center
101 Ashworth Road
W. Des Moines, IA 50265
TEL (515) 224-4110
FAX (515) 224-4057

Kansas
Glen-Gery Brick Center
336 S. 42nd. Street
Kansas City, KS 66106
TEL (913) 281-2800
FAX (913) 281-2992

Michigan
Glen-Gery Brick Center
6315 Highland Road
Waterford MI 48327
TEL (248) 666-2411
FAX (248) 666-4263

Pennsylvania
Glen-Gery Brick Center
Turnpike Industrial Park
2750 Commerce Drive
Middletown, PA 17057
TEL (717) 939-6061
FAX (717) 939-8035

Glen-Gery Brick Center
200 Hartman Road
Reading, PA 19605
TEL (610) 939-1721
FAX (610) 939-2317

Glen-Gery Brick Center
423 Susquehanna Trail
Watsontown, PA 17777
TEL (570) 742-4721
FAX (570) 742-7112

Glen-Gery Brick Center
1090 E. Boundary Avenue
P O Box 2903
York, PA 17403
TEL (717) 854-8802
FAX (717) 854-1251

Virginia
Glen-Gery Brick Center
9905 Godwin Drive
Manassas, VA 22110
TEL (703) 368-3178
FAX (703) 368-1280

Corporate Office

Glen-Gery Corporation
1166 Spring Street
P O Box 7001
Wyomissing, PA 19610-6001
TEL (610) 374-4011
FAX (610) 374-1622

e-mail: gg@glengerybrick.com
http://www.glengerybrick.com

This document is furnished for informational purposes only and is NOT intended as an EXPRESSED WARRANTY. Glen-Gery accepts no liability for the use of this material. All information should be independently evaluated by a qualified design professional in the context of the specific circumstances in which it is to be applied.

Seller warrants title to said goods and that the goods supplied shall meet applicable specifications where such are designated in the Buyer's order. Should the said goods fail to conform to the foregoing warranty, Seller will, at its option replace the same, F.O.B. job site or refund the portion of purchase price paid for such non-conforming goods. SELLER SHALL NOT BE LIABLE FOR INCIDENTAL OR CONSEQUENTIAL DAMAGES FOR ANY BREACH OF THESE WARRANTIES. THE FOREGOING WARRANTIES ARE IN LIEU OF ALL OTHER WARRANTIES WHETHER EXPRESS OR IMPLIED, WRITTEN OR ORAL, INCLUDING, WITHOUT LIMITATION, WARRANTY OF MERCHANTABILITY OR FITNESS FOR ANY PARTICULAR PURPOSE.

Revised 3/11 LSD

©2011 Glen-Gery Corporation

WORKRITE®
CEMENTS FOR MASONRY
A DIVISION OF YORK BUILDING PRODUCTS

CERTIFICATION

DATE: 7/17/17

TO: A.G. Hungerford & Son, Inc.
12165 Rock Point Rd, Newburg MD 20664

PROJECT:	SHA Prince Frederick Shop, Phase 2 Renovation
GC:	S.E. Davis Construction, LLC.
MC:	Lacey Construction, Inc.
ARCH:	Whitman, Requardt and Associates
COLOR:	WR2320

This is to certify that WORKRITE® **Colored** Portland Cement & Lime Blend – Type S shipped from our plant in Thomasville, PA, conforms to:

Type I Portland Cement - ASTM Standard C 150, "Specification for Portland Cement."
Type S Hydrated Lime - ASTM Standard C 207, "Specification for Hydrated Lime for Masonry Purposes."

WORKRITE® Colored Portland Cement & Lime Blend – Type S meets ASTM Standard C 270, "Specification for Mortar for Unit Masonry" when blended with sand that complies with ASTM Standard C 144, "Specification for Aggregate for Masonry Mortar."

Very truly yours,

Steve Malek
Operations Manager
Workrite Packaged Cement Products

5952 Lincoln Highway West, Thomasville, PA 17364
Phone: 717.792.4700 | Fax: 717.792.1599
www.workrite-cements.com

WORKRITE®
COLORED MASONRY CEMENT
A DIVISION OF YORK BUILDING PRODUCTS

5952 Lincoln Highway West, Thomasville, PA 17364 | 717.792.4700 | workrite-cements.com

CLEANING COLORED MORTAR

Understanding Cleaning.

Cleaning procedures can alter the appearance of a mortar joint, changing both texture and color. Most cleaning techniques are designed to remove mortar droppings or smears from the surface of newly-constructed masonry. However, if these techniques dissolve the cement paste from the surface of a mortar joint, the appearance of that joint is no longer dominated by the color of the hardened cement paste, but reflects the appearance of sand particles that are exposed on the surface. In addition, improper cleaning may damage masonry units and compromise the ability of the masonry to resist water penetration. So extreme caution must be observed when cleaning mortar.

First, Minimize Cleaning Requirements.

When it comes to cleaning masonry, less is better. Careful workmanship includes using skills that minimize mortar droppings and smears on the face of the masonry-- right from the start. The mason contractor can use straw, sand, or plastic to protect the base of the wall from rain-splashed mud and mortar splatter. The mason should also assure that the inside scaffold board is turned on edge at the end of each working day to prevent rain from splashing mortar and dirt onto the masonry wall. Covering the tops of walls at the end of each working day will prevent rain from entering walls and help reduce the possibility of efflorescence.

Clean Masonry Carefully.

Use the least aggressive cleaning technique possible. Make certain that the cleaning procedure is consistent with the recommendations of the manufacturer of the units, and pre-qualify the procedure on the sample panel and a small test area of the building. When acid-based cleaning solutions are used, the mortar should be allowed to cure at moderate temperatures for about seven days prior to cleaning. After cleaning a trial area, allow the area to dry, and closely examine mortar joint surfaces to ascertain that the procedure has not etched the surface.

Clean from the top of the wall section to the bottom. For consistent results, do not overlap areas being cleaned, and be sure to follow the diluation and cleaning instructions from the manufacturer of the cleaning product.

CAUTION:

Contact with wet (unhardened) concrete, mortar, cement, or cement mixtures can cause SKIN IRRITATION, SEVERE CHEMICAL BURNS, or SERIOUS EYE DAMAGE. Wear waterproof gloves, a long-sleeved shirt, full-length trousers, and proper eye protection when working with these materials. If you have to stand in wet concrete, use waterproof boots that are high enough to keep concrete from flowing into them. Wash wet concrete, mortar, cement, or cement mixtures from your skin immediately after contact. Indirect contact through clothing can be as serious as direct contact, so promptly rinse out wet concrete, mortar, cement, or cement mixtures from clothing. Seek immediate medical attention if you have persistent or severe discomfort.

YORK BUILDING PRODUCTS
A STEWART COMPANY

July 12, 2017

Lacey Construction
P.O. Box 669
Hollywood, MD 20636

CERTIFICATION

JOB: SHA Prince Frederick Shop Phase 2 Renovation
100 Hollowing Point Rd
Prince Frederick, MD 20678

ARCHITECT: Whitman, Requardt and Associates

GENERAL CONTRACTOR: S.E. Davis Construction, LLC

MASONRY CONTRACTOR: Lacey Construction

We herewith certify that all concrete masonry units supplied for the above-referenced project comply fully with the A.S.T.M. designations as follows:

C 90-09: Standard Specification for Load Bearing Concrete Masonry Units

PRODUCT: Normal Weight CMU

Normal weight concrete masonry units are made from crushed limestone aggregates meeting requirements of A.S.T.M. C-33.

Respectfully,
YORK BUILDING PRODUCTS CO., INC.

Robert Radford
Sales Representative

P.O. Box 1708, York, Pennsylvania 17405
717-848-2831 FAX 717-854-9156
www.yorkbuilding.com

Pennoni
PENNONI ASSOCIATES INC.
CONSULTING ENGINEERS

Project No.: **YORK-1502**

Report Date: **December 23, 2015**

Client: **Sam Cooke**
Address: **York Building Products Co., Inc.**
950 Smile Way
York, PA 17404

Project Name: **York Lab Tests Aberdeen Plant**

Date Received: **December 15, 2015**

Date of Compression Testing: **December 21, 2015**

Unit Specification: **ASTM C90**

Unit Designation and Description: **Concrete Masonry Unit**
8x8x16 Hollow NW
Aberdeen Plant

Laboratory Number:**10- 136850**

Summary of Test Results

Physical Property	Specification Values	Average Test Results		Physical Property	Specification Values	Average Test Results	
Net Compressive Strength (min.)	2000	**2740**	*psi*	Min. Faceshell Thickness (FST)	1.25	**1.29**	*in.*
Gross Compressive Strength		**1460**	*psi*	Min. Web Thickness (WT)	0.750	**1.04**	*in.*
Density		**138.7**	*pcf*	Equivalent Web Thickness		**2.37**	*in.*
Absorption (max.)	13	**7.6**	*pcf*	Equivalent Thickness		**4.04**	*in.*
Percent Solid		**52.8**	*%*	Normalized Web Area	6.5	**28.5**	$in.^2/ft.^2$
Net Cross-Sectional Area		**63.69**	$in.^2$	Max. Var. From Spec. Dimensions			*in.*
Gross Cross-Sectional Area		**119.31**	$in.^2$	Moisture Content			*%*

Individual Unit Test Results

Compression Units

Specimen No.	Received Wt, W_R	Cross-Sectional Area		Max. Load	Compressive Strength	
		Gross	Net*		Gross	Net
	lb.	$in.^2$	$in.^2$	*lb*	*psi*	*psi*
4	39.58	119.18	63.67	166075	1390	2600
5	38.45	119.26	63.67	170740	1430	2680
6	40.11	119.49	63.75	188740	1570	2960
Average	**39.38**	**119.31**	**63.69**	**175190**	**1460**	**2740**

* Net area determined from absorption specimens unless solid units are used.

Absorption Units

Specimen No.	Average Width	Average Height	Average Length	Average Min. FST	Average Min. WT	Normalized Web Area
	in.	*in.*	*in.*	*in.*	*in.*	$In.^2/ft^2$
1	7.64	7.63	16.11	1.29	1.03	27.7
2	7.65	7.62	15.60	1.29	1.04	28.8
3	7.66	7.61	15.61	1.29	1.05	29.0
Average	**7.65**	**7.62**	**15.77**	**1.29**	**1.04**	**28.5**

Specimen No.	Received Wt, W_R**	Immersed Wt, W_I	Saturated Wt, W_S	Oven-Dry Wt, W_D	Absorption		Density	Net Volume	Net Area	Percent Solid	Moisture Content** % of total absorption
	lb	*lb*	*lb*	*lb*	*pcf*	*%*	*pcf*	ft^3	in^2	*%*	
1	40.65	24.00	41.91	39.73	7.6	5.5	138.4	0.2869	63.67	52.8	
2	40.67	24.01	42.00	39.79	7.7	5.6	138.0	0.2882	63.75	54.8	
3	38.39	22.69	39.42	37.41	7.5	5.4	139.5	0.2680	63.83	50.9	
Average	**39.90**	**23.57**	**41.11**	**38.98**	**7.6**	**5.5**	**138.7**	**0.2810**	**63.75**	**52.8**	

**Received weight determined at the time of unit delivery to the job site or from units sampled at that time and delivered to the laboratory in sealed containers for moisture content determination.

Remarks: The units were tested according to ASTM C140. This set meets the absorption and compressive strength requirements of ASTM C90
NCMA 7-1C Fire Rating = 2 h, based on the client supplied mix design of 44.6% limestone screenings, 28.1% sand and 27.3% stone.

Chas M. Snyder, PE
Laboratory Manager

2041 Avenue C • Suite 100 • Bethlehem, PA 18017 • Tel: 610•231•0600 • Fax: 610•231•2033
www.pennoni.com

AAP AASHTO R18

Lehigh Cement Company
LEHIGH EAST
675 Quaker Hill Road
Union Bridge, MD 21791
Phone (800) 462-9071
Fax (410) 386-6313
www.lehighcement.com

July 12, 2017

York Building Products Company
P.O. Box 1708
York, PA 17405
FAX: (717) 854-9156

JOB: PHA Prince Frederick Ship Phase 2 Renovation
ARCH: Whitman, Requardt and Associates
GC: S.E. Davis Construction, LLC
MC: Lacey Construction

TO WHOM THIS CONCERNS:

This letter will certify that, Lehigh Standard Gray Portland/Lime Cement, Type S, conforms to the standard proportion requirements, Table 1 in ASTM C-270, *"Standard Specification for Mortar for Unit Masonry."* Table 1 in ASTM C-270 provides the following proportions, by volume, for a Portland/Lime Cement Type S: 1 part Portland Cement, and over ¼ to ½ parts Hydrated Lime.

In addition to meeting the above mentioned specification, the Portland cement component of the Portland/Lime blend conforms to ASTM C-150 "*Standard Specification for Portland Cement.*" The hydrated lime component conforms to ASTM C-207, Type S, "*Standard Specification for Hydrated Lime for Masonry Purposes.*"

Yours Truly,

J. D. Hook

Jeffrey D. Hook
Quality Control Manager

cc: Files
Union Bridge Sales Office

AMERIMIX™

Project:	SHA Prince Frederick Shop Phase 2 Renovation
Address:	100 Hollowing Point Road, Prince Frederick, MD. 20678
Architect:	Whitman, Requardt and Associates
General Contractor:	S.E. Davis Construction, LLC.
Masonry Contractor:	Lacey Construction Inc.

Certificate of Compliance AMX 600 Coarse Grout

This certifies that Amerimix AMX 600 3,000psi pre-blended corefill coarse grout meets and exceeds ASTM C 476 grout requirements when tested in accordance to ASTM C 1019. AMX 600 is a factory pre-blended grout containing Portland cement meeting ASTM C 150 and dried fine and coarse aggregates meeting ASTM C 404 and requires only the addition of potable water on the job site.

Please call 888-313-0755 for any additional information.

Regards,

Sean Gownley
Mid-Atlantic Sales Manager
Amerimix

HOHMANN & BARNARD, INC.
a MiTek company

Flashing and Reglets

Copper Thru-Wall Flashing

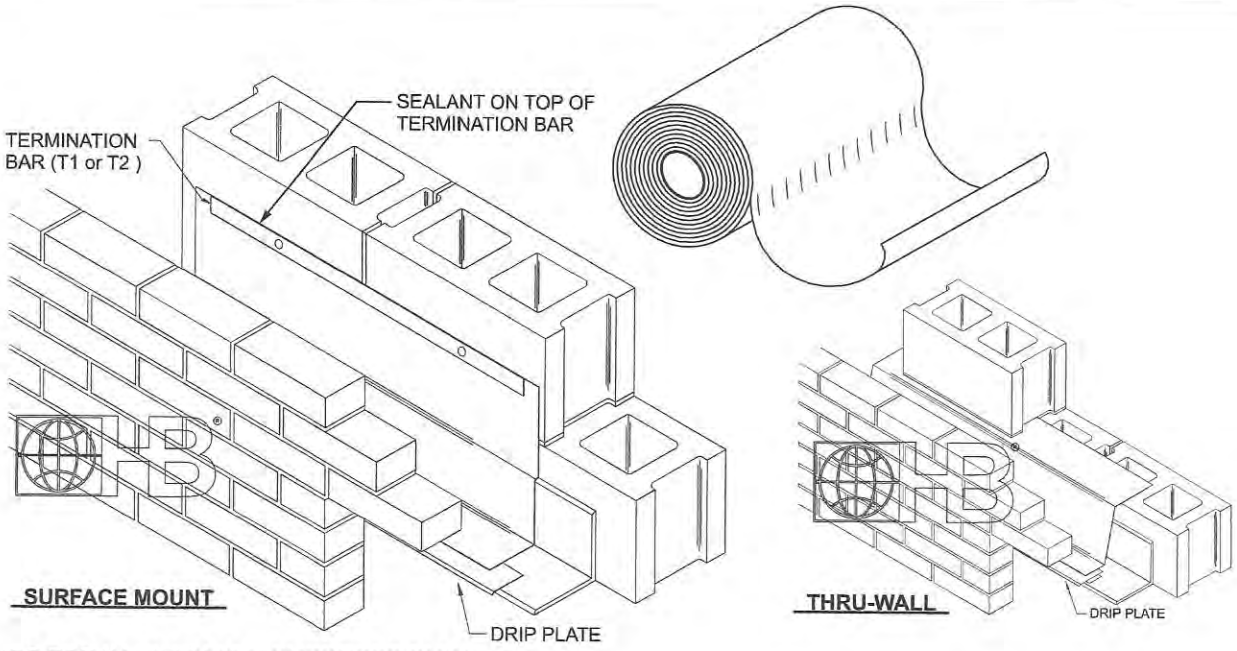

DRAWINGS FOR ILLUSTRATIVE PURPOSES ONLY

Material: Copper sheet used in the fabrication of copper laminates conforms to ASTM B370 (110 Alloy)

C-Coat™ Flashing
- Soft-tempered copper bonded on both sides with an elastic, asphalt compound.
- The flexibility and toughness of copper are combined with the superior water-proofing of elastic, asphalt-compound coating.
- Copper is shielded from acids, alkalis and electrolysis that may be present in uncured mortar joints.
- The asphalt coating is self-sealing in case of puncture.

C-Fab™ Flashing
- Soft-tempered copper bonded on both sides with an asphalt-saturated glass fabric scrim.
- Asphalt-saturated glass fabric adds protection to copper during shipment, while adding another layer of waterproofing and chemical resistance.
- Coarse texture aids in bonding with mortar.

C-Kraft™ Duplex Flashing
- Soft-tempered copper bonded on both sides with creped kraft paper, saturated in waterproofing asphalt.
- End product is lighter weight than C-Fab™, and slightly less expensive.

NOTE:
- An optional stainless steel drip edge is recommended to ensure diversion of moisture to outside of building (product can be cut flush with exterior wall).
- Surface mount applications should be attached with a stainless steel or aluminum termination bar.
- Surface-mount is the preferred method of installation when using air barriers.

*** Please refer to Hohmann & Barnard installation instructions for more information.**

☐ **C-Coat™ Flashing** (25-foot roll)
☑ **C-Fab™ Flashing** (25-foot roll)
☐ **C-Kraft™ Duplex Flashing** (60 -foot roll)

Width:
☐ 12" ☐ 16" ☐ 18" ☐ 20"
☑ 24" ☐ 32" ☐ 36" ☐ Other _____

Weight:
☐ 3 oz. ☐ 5 oz. ☑ 7 oz.

Corners (12 oz.): ☐ inside ☐ outside ☐ end dam

☑ **H&B Asphalt Mastic** (5 gal. pail)
A high-grade, asphalt-based cement used in bonding asphalt-coated flashing to construction surfaces. It provides a strong, flexible waterproof barrier with excellent adhesion and allows for expansion or contraction caused by temperature fluctuation or building movement.

☐ **OPTIONAL: Stainless Steel Drip Plate:** (Recommended)
○ 1 ½" ○ 3" ○ Other _____

☐ **OPTIONAL: Termination Bar:**
(for surface-mount applications)

STAINLESS STEEL	ALUMINUM
○ T1 ○ T2	○ T1 ○ T2

IMPORTANT: Since each construction project is unique, the appropriate selection and use of any product contained herein must be determined by competent architects, engineers and other appropriate professionals who are familiar with the specific requirements of the project in question.

This drawing and/or data sheet is the confidential and proprietary information of Hohmann & Barnard, Inc. and is not to be reproduced, copied or disclosed, in whole or in part, without the prior written consent of H&B.

HOHMANN & BARNARD, Inc.
30 Rasons Court | Hauppauge, NY 11788
CORPORATE HEADQUARTERS
T: 800.645.0616 F: 631.234.0683
www.h-b.com

Branch/Subsidiary Locations:
ALABAMA - ARIZONA - ILLINOIS
MARYLAND - NEW YORK
PENNSYLVANIA - TEXAS - UTAH
CANADA

© 2013-2016 MiTek®

HOHMANN & BARNARD, INC.
A MiTek - BERKSHIRE HATHAWAY COMPANY

Flashing and Reglets

Stainless Steel Corners & End Dams

SANDELL® MOISTURE PROTECTION SYSTEMS
A HOHMANN & BARNARD COMPANY

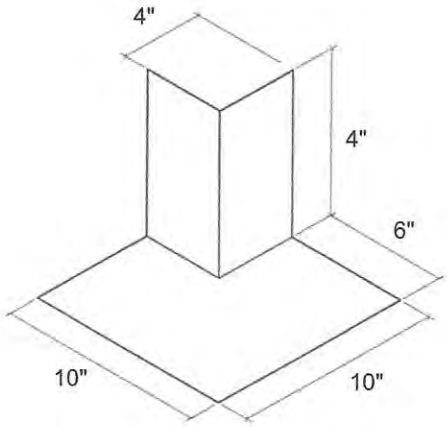

Outside Corner

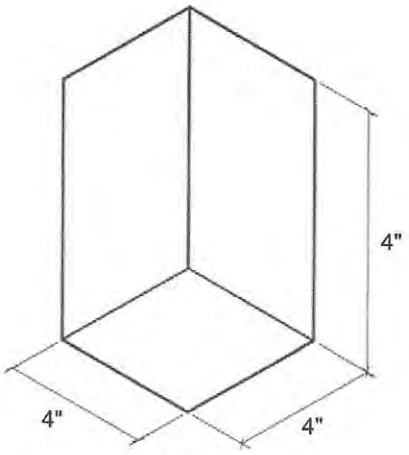

End Dam

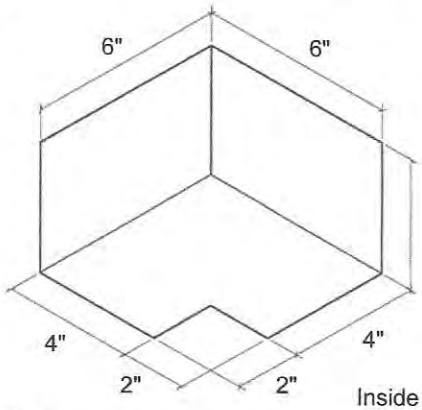

Inside Corner

DRAWINGS FOR ILLUSTRATIVE PURPOSES ONLY

Stainless Steel Corners & End Dams
Hohmann & Barnard's Stainless Steel Corners & End Dams are pre-fabricated soldered inside corners, outside corners and end dams suitable for all H&B flashings. Simply place underneath flashing for the ultimate protection against moisture penetration.

Stainless Steel
- Corners and End Dams are made of 26 ga. (18 mil) Type 304 Stainless Steel - ASTM A240/A240M, ASTM A666, ASTM A480/A480M, ASTM A167
- **Can be used with: Flex-Flash® Flashing, Textroflash™ Flashing, and Stainless Metal Flashing.**
- Per the International Stainless Steel Forum, Stainless Steel objects have an average of 60% recycled content.

NOTE: Also available in Copper (for use with Copper-Tuff™ Flashing, Copper-Tuff™ SA Flashing, Copper-Flex™ Flashing, C-Fab™ Flashing, and Copper Metal Flashing)

Stainless Steel
- ☑ Inside Corner
- ☑ Outside Corner
- ☑ End Dam

Corners and End Dams are packaged 25 pieces per box.

HOHMANN & BARNARD, Inc.
30 Rasons Court | Hauppauge, NY 11788
CORPORATE HEADQUARTERS
T: 800.645.0616 F: 631.234.0683
www.h-b.com

Branch/Subsidiary Locations:
ALABAMA - ILLINOIS - MARYLAND
NEW YORK - PENNSYLVANIA - TEXAS
CANADA

© HOHMANN & BARNARD, INC. - 2012

HOHMANN & BARNARD, INC.
a MiTek company

TECHNICAL DATA SHEET

HB SEALANT

Multi-Purpose Sealant – 25% Movement

1. Product Data

Date of Preperation: July 14, 2015
Product Name: HB SEALANT
Producer: Hohmann & Barnard, 30 Rasons Court, Hauppauge, NY 11788
Telephone: 800.645.0616 | **Fax:** 631.234.0683
Email: weanchor@h-b.com | **Web:** www.h-b.com

2. Product Description

HB SEALANT is a multi-purpose, resilient joint sealant that combines economy and high performance. It is ideal for a wide range of applications where joint movement requires compression and extension in excess of 25%. Because HB SEALANT is a moisture-curing polyether sealant, **it is effective in damp, dry or cold climates** and is free of solvents and isocyanates. It will not shrink upon curing, bubble on damp surfaces as polyurethanes sealants often do, or discolor when exposed to UV light. HB SEALANT has excellent elastomeric properties and adheres to most construction materials including difficult surfaces such as Kynar 500® PVDF and other anodized metals and coatings. HB SEALANT is effective in many difficult construction site conditions: **It can be applied to damp surfaces at temperatures as low as 32°F (0°C).**

Basic Uses:

- Expansion joints
- Pre-cast concrete
- Block and Masonry
- Curtain Walls
- Window and door frames
- Siding
- Parapets
- Cove Joints
- Transportation
- Weather Sealing

Compatible Substrates:
Test and evaluate to ensure adequate adhesion.

- Concrete
- Block & Brick
- Stone
- Masonry
- Aluminum & Galvanized Metal
- Wood
- Engineered Plastics, Vinyl, PVC
- Glass
- Fiberglass FRP
- EPS Foam

3. Applicable Performance Standards

- ASTM C920, Type S, Grade NS, Class 25, Uses NT, T_2, M, G, A & O
- Federal Specification TT-S-00230-C Type II, Class B
- Corps of Engineers CRD-C-541, Type II, Class B
- Canadian Standards Board CAN 19, 13-M82

4. Regulatory Compliance

- Conforms to OTC Rule for Sealants
- Meets requirements of California Regs: CARB, BAAQMD and SCAQMD
- Conforms to California Proposition 65
- Conforms to USDA Requirements for Non-food Contact

5. Green Standards

- LEED 2.2 for New Construction and Major Renovations: Low Emitting Materials (Section 4.1): **1 Point**
- NAHB Model Green Home Building Guidelines: **5 Global Impact Points**
- VOC Content: less than 19 grams / liter ASTM D2369 EPA Method 24 (tested at 240°F / 115°C)

6. Advantages

- Solvent free, 100% solids will not shrink
- 30 minute skin over
- No outgassing on damp surfaces
- Non-slump, applies vertically and overhead
- Color stability, will not suntan
- Paintable within 24 hours (See limitations)
- Bonds to Kynar 500® PVDF coated metal

7. Preparatory Work

Joint Preparation: Joint surfaces should be clean, dry and free from all contamination including: dirt, oils, grease, tar, wax, rust and any other substance that may inhibit the sealant's performance.

Joint Design: Install all joint applications per ASTM and SWRI recommendations and guidelines. Joints shall be designed with a depth to width ratio of 1:2 (joint depth one-half the width). Control the depth of the sealant by using a polyethylene backer rod that is 25% larger than the joint opening at standard temperature. To prevent three-point adhesion use a backer rod or bond breaker tape to ensure proper joint movement and a long lasting weatherproof seal. Where the joint configuration will not permit a backer rod, HOHMANN & BARNARD recommends that an alternative bond breaker be used.

Joint Width Inches (mm)	Joint Depth Inches (mm)
1/4 - 1/2 (6-13)	1/4 (6)
1/2 - 3/4 (13-19)	1/4 - 3/8 (6-10)
3/4 - 1 (19-25)	3/8 - 1/2 (10-13)

HOHMANN & BARNARD recommends an appropriate substrate primer to be used on high moving joints or dissimilar substrates which require increased adhesion properties.

Primer: In most instances HB SEALANT will not require a primer. However, certain applications or substrates may require a primer to ensure a long lasting bond and weatherproof seal. It is the applicator's responsibility to determine the need for a primer. **HOHMANN & BARNARD recommends a primer be used for any application where prolonged immersion is anticipated.**

Typical physical Properties		
Gun Grade	Zero Slump	
Viscosity	862,100 cp	Brookfield RVF TF Spindle, 4 RPM, 73°F (23°C)
Density	13.2 +/- 0.2 lbs per gallon	ASTM D1475
Tack Free Time	30 min +/- 10 min	45 +/- 5 % R.H.
Elongation at Break	375%	ASTM C679
Hardness Shore A	25 +/- 3	ASTM C661

Typical physical Properties		
Shear Strength	157 psi	ASTM D1002
Tensile Strength	172 psi	ASTM D412
Low temp. flex	Pass -10°F (-23°C) 1/4 inch mandrel	ASTM D816
Shrinkage	No visible shrinkage after 14 days	
Service Temperature	-40°F to 200°F (-40°C to 93°C)	

8. Application Guidelines

Concrete: Prior to application remove any residual contamination by mechanical abrasion, sand blasting or power washing. On green concrete, remove all release agents, friable and loose concrete. Dry all visible and standing water prior to applying HB SEALANT. Install an appropriate backer rod to avoid three-point bonding.

Metal: Prepare all metal to ensure maximum adhesion. Remove all rust, scale and residue by wire brushing to a bright metal sheen. Remove films, loose or inappropriate coatings and oils with an appropriate solvent such as alcohol.*

**HOHMANN & BARNARD recommends that coated substrates be tested for adhesion prior to starting a project. Please contact our Technical Department for specific application guidelines and recommendations.*

Wood: Material should be clean, sound and dry prior to sealant application. Allow treated wood to weather for six months prior to application. Remove all coatings and paint (or test for compatibility) to ensure proper bonding. Do not use on fire retardant lumber.

Primer: In most instances HB SEALANT will not require a primer. However, certain applications or substrates may require a primer to ensure a long lasting bond and weatherproof seal. It is the applicator's responsibility to determine the need for a primer. **HOHMANN & BARNARD recommends a primer be used for any application where prolonged immersion is anticipated.**

Application: Remove all dirt, oil, loose paint, frost and other contamination from all working surfaces with alcohol. ***DO NOT USE petroleum solvents such as mineral***

spirits or xylene. Maintain HB SEALANT at room temperature before applying to ensure easy gunning and tooling. Test and evaluate to ensure adequate adhesion. Carefully gun the sealant with a smooth, continuous bead. If tooling is needed, do so within fifteen minutes of application.

Clean-Up: Wet sealant can be removed using a solvent such as alcohol. Cured HB SEALANT can be removed by abrading or scraping the substrate.

9. Other Information

Storage: Store original, unopened containers in a cool, dry area. Protect unopened containers from water, heat and direct sunlight. *Elevated temperatures will reduce shelf life.* HB SEALANT will not freeze.

Shelf Life: Twelve months from date of manufacture when stored at 70°F / 21°C with 50% relative humidity. ***High temperature and high relative humidity may significantly reduce shelf life.*** Pails have a shelf life of six months.

Caution: *Avoid prolonged contact with skin. Uncured adhesive irritates eyes. In case of contact with eyes immediately flush with water. Call a physician. Please refer to the SDS for First Aid information.* ***Contact Hohmann & Barnard for most current SDS .***

KEEP OUT OF REACH OF CHILDREN.

Limitations:

- Horizontal applications will require tooling.
- In areas where prolonged chemical exposure is anticipated, contact us for recommendations.
- Allow treated wood to "cure" for six months prior to application per APA guidelines.
- Do not use in areas subject to continuous immersion.
- Do not store in elevated temperatures.
- Allow asphalt to cure a minimum of six months before applying HB SEALANT
- Remove all coatings and sealers before application.
- For applications below 32°F (0°C) contact Hohmann & Barnard for more information.
- Test and evaluate all paints before application. Polyurethane and oil based paints may dry slowly.
- Do not use on TPO without priming first.

WARRANTY: Contact the manufacturer for complete information on product warranty conditions, duration and remedies. Hohmann & Barnard, Inc. makes no warranties, either expressed or implied, of correctness and fitness for use for any particular purpose. The recipient agrees that any use of product information and electronic files is at their own risk. In no event shall Hohmann & Barnard, Inc., be liable for direct, indirect or consequential damages as a result of the recipient use or reuse of product information or electronic files. Hohmann & Barnard, Inc., shall be held harmless against all damages, liabilities or costs, including reasonable attorney fees and defense costs, arising out of or resulting from use of product information or electronic files.
Copyright © 2015

Hohmann & Barnard, Inc.
30 Rasons Court | Hauppauge, NY 11788
TEL: 800-645-0616 | FAX: 631-234-0683
EMAIL: weanchor@h-b.com | www.h-b.com

HOHMANN & BARNARD, INC.
A MiTek - BERKSHIRE HATHAWAY COMPANY

Mortar Collection Systems

Mortar Trap™

SANDELL® MOISTURE PROTECTION SYSTEMS
A HOHMANN & BARNARD COMPANY

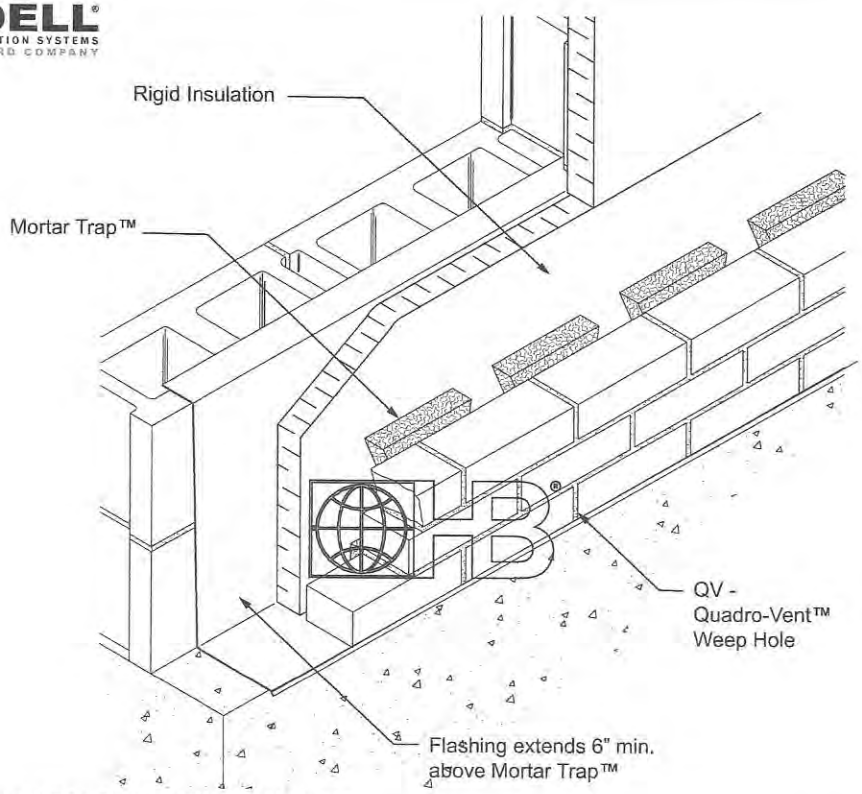

DRAWINGS FOR ILLUSTRATIVE PURPOSES ONLY

Mortar Trap™
Mortar Trap™ is manufactured from high-density polyethylene (HDPE) strands woven into a 90% open mesh. Its unique shape breaks up mortar droppings and prohibits mortar from creating a moisture retaining barrier, allowing water to flow freely to the weep holes.

Features:

- 90% open mesh construction allows unobstructed passage of air & water through the material itself so walls breathe, drain & dry quicker.
- Will not react with common building products (PVC, polystyrene, copper, rubberized-asphalt, lead, stainless steel or galvanized metal).
- Will not: absorb or trap moisture, support mold or fungus, and is inedible to insects.
- Will not degrade as a result of temperature variations and is designed to last for the life of the building.
- Keeps weep holes open - catches and permanently suspends mortar-droppings so blockage can't occur.
- Fast, easy installation by masons - does not require fasteners or adhesives, no special skills or tools.
- Slightly compressible to allow for cavity variations in the field.

Thickness: (Mortar Trap™ is 10" high x 4' long)

- ☐ 0.4"
- ☑ 1"
- ☐ 1 ½"
- ☐ 2"

NOTE: When Mortar Trap™ is used with the Quadro-Vent™ Weep Hole additional insect screening is not required.

HOHMANN & BARNARD, Inc.
30 Rasons Court | Hauppauge, NY 11788
CORPORATE HEADQUARTERS
T: 800.645.0616 F: 631.234.0683
www.h-b.com

Branch/Subsidiary Locations:
ALABAMA - ILLINOIS - MARYLAND
NEW YORK - PENNSYLVANIA - TEXAS
CANADA

© HOHMANN & BARNARD, INC. - 2012

HOHMANN & BARNARD, INC.
a MiTek company

Weep Holes/Vents

QV - Quadro-Vent™

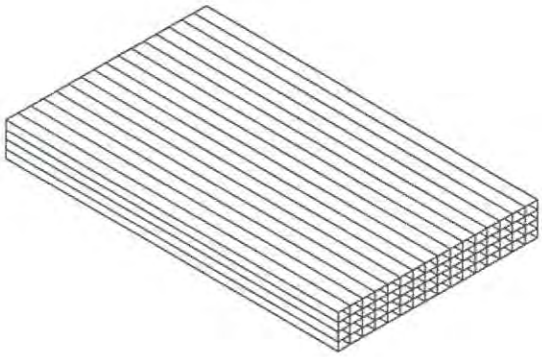

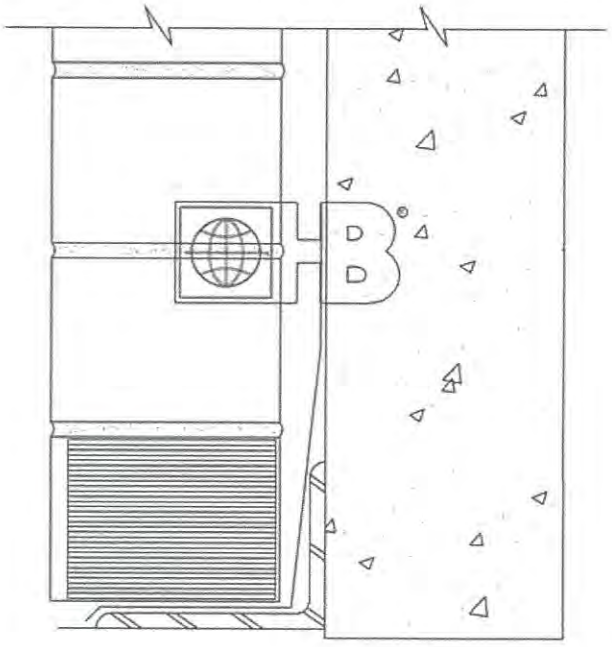

DRAWINGS FOR ILLUSTRATIVE PURPOSES ONLY

Quadro-Vent's honeycomb design allows passage of moisture from cavity to the building exterior while restricting ingress of insects and other debris.

- Allows passage of moisture up to its 2 ½" height, important in the event of mortar droppings at bottom of cavity.
- Is suitable for top of wall venting.
- Polypropylene tested in conformance with ASTM D2240, ASTM D790B, ASTM D638, and ASTM D1238B.

Color:

☐ Gray ☐ Clear ☐ Buff ☐ Black
☑ Almond ☐ Cocoa ☐ White

Size:

☑ Standard (3/8" thick x 3 ⅜" wide x 2 ½" tall)
☐ Jumbo (3/8" thick x 3 ⅜" wide x 3 ½" tall)
☐ Custom 3/8" x _____ x _____

IMPORTANT: Since each construction project is unique, the appropriate selection and use of any product contained herein must be determined by competent architects, engineers and other appropriate professionals who are familiar with the specific requirements of the project in question.

HOHMANN & BARNARD, Inc.
30 Rasons Court | Hauppauge, NY 11788
CORPORATE HEADQUARTERS
T: 800.645.0616 F: 631.234.0683
www.h-b.com

Branch/Subsidiary Locations:
ALABAMA - ILLINOIS - MARYLAND
NEW YORK - PENNSYLVANIA - TEXAS
CANADA

© HOHMANN & BARNARD, INC. - 2016

HOHMANN & BARNARD, INC.
a MiTek company

Control Joints / Expansion Joints

NS - Closed Cell Neoprene Sponge

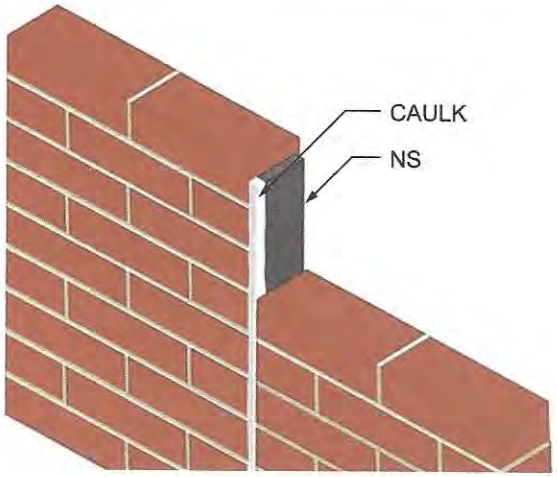

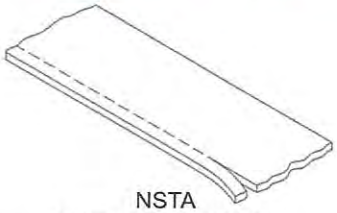

NSTA
(WITH TEAR STRIP)

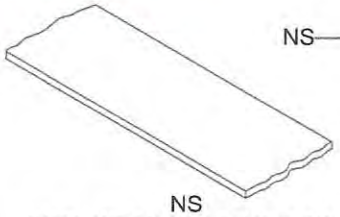

NS
(STD. WITHOUT TEAR STRIP)

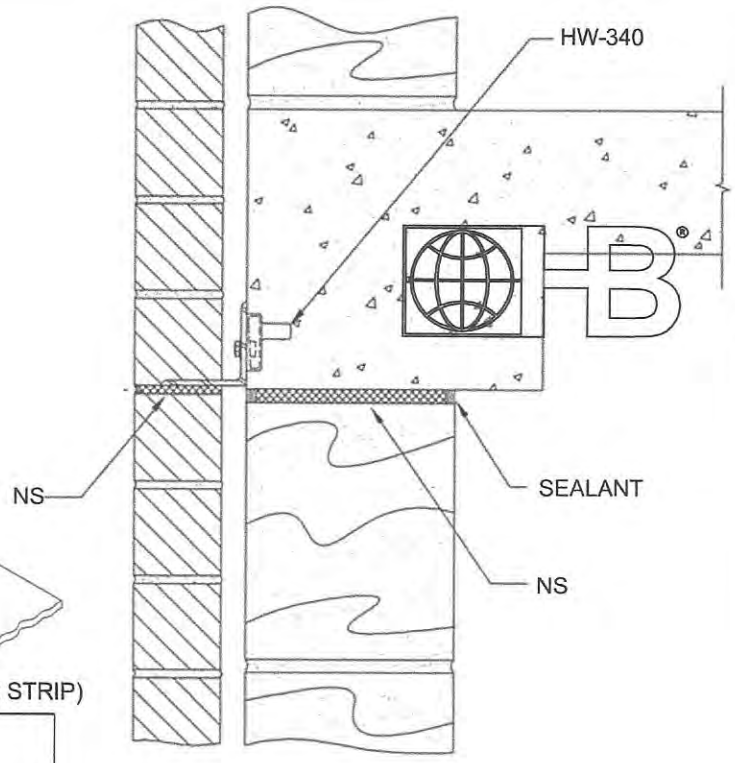

DRAWINGS FOR ILLUSTRATIVE PURPOSES ONLY

TECHNICAL DATA / PHYSICAL PROPERTIES

Color: Black / Dark Gray

Polymer: Neoprene/SBR

ASTM Specifications D-1056-91	SCE 41/2A1
SAE Specifications 18-R	
Tensile Strength PSI ASTM D3575	65
Density (pcf) approx.	2-5
Elongation ASTM Method 3575	350
Temperature Resistance	
Low	- 90 degrees F
High continuous	+155 degrees F
High intermittent	+210 degrees F
Compression Set (max) ASTM 3575/1056	12% / 25%
ASTM Method - 1/2" samples compressed 50% 22 hrs. @ 70 degrees F - 24 hr. recovery	
Compression Deflection (psi)	5 - 12
Weight required to compress a 1.129" diameter disc by 25% Varies according to thickness	
Accelerated Aging (7 days at 170o F)	
Flexibility - 180o F bend without cracking	Excellent
Appearance change	None
Shrinkage, Lin. Max	3% (+/-)
Water Absorption by weight (Max.) (ASTM method)	5%

Material:

Closed Cell (ASTM D1056 Grade 2A 1)

- [x] NS - Without tear strip (standard)
- [ ] NSTA - With tear strip

- [ ] Optional: Pressure-Sensitive Adhesive on one side

Thickness:	**Width:**
[ ] 1/4"	[ ] 3"
[x] 3/8"	[ ] 4"
[ ] 1/2"	[ ] 6"
[ ] Other _____	[ ] Other _____

IMPORTANT: Since each construction project is unique, the appropriate selection and use of any product contained herein must be determined by competent architects, engineers and other appropriate professionals who are familiar with the specific requirements of the project in question.

This drawing and/or data sheet is the confidential and proprietary information of Hohmann & Barnard, Inc. and is not to be reproduced, copied or disclosed, in whole or in part, without the prior written consent of H&B.

HOHMANN & BARNARD, Inc.
CORPORATE HEADQUARTERS
30 Rasons Court | Hauppauge, NY 11788
T: 800.645.0616 F: 631.234.0683
www.h-b.com

Branch/Subsidiary Locations:
ALABAMA - ARIZONA - ILLINOIS
MARYLAND - NEW YORK
PENNSYLVANIA - TEXAS - UTAH
CANADA

© 2013-2016 MiTek®

HOHMANN & BARNARD, INC.
a MiTek company

Control Joints / Expansion Joints

RS Series - Rubber Control Joint

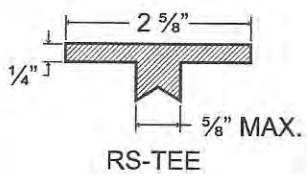

RS-TEE

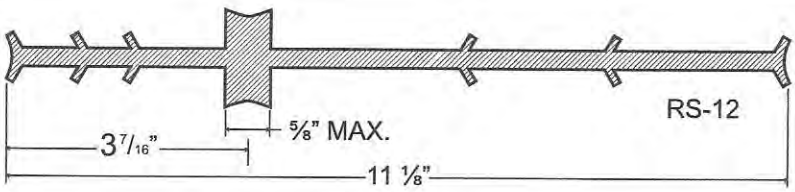

RS-12

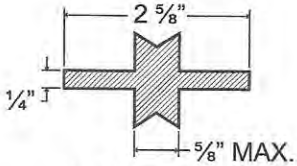

RS STANDARD

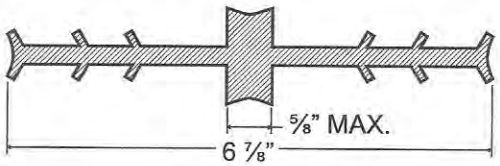

RS-8

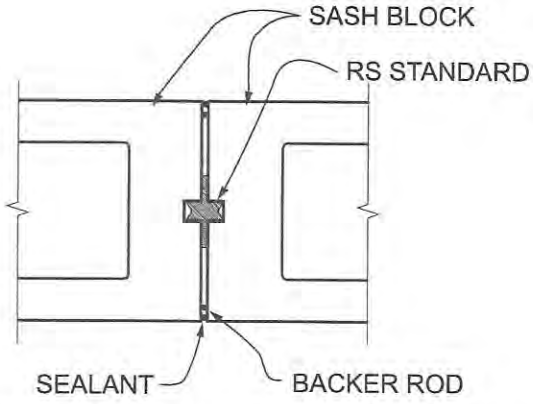

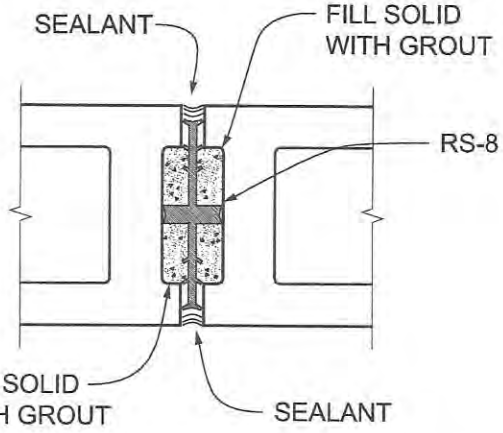

DRAWINGS FOR ILLUSTRATIVE PURPOSES ONLY

MATERIAL SPECIFICATIONS:

- Extruded rubber material designed for masonry walls at control joints
- Rubber material conforms to ASTM D2000 M2AA-805 (type rubber 654-06) with a durometer hardness of 80 (+ or - 5) when tested in conformance with ASTM D2240
- RS Series rubber control joints are manufactured from 50% recycled material.

TEST DATA

	Typical Values	Test Method
Tensile Strength	1000	ASTMD-412
Ultimate Elongation	575%	ASTMD-412
Compression Set	45%	ASTMD-395 Method B
Low Temperature Brittleness	Passed	ASTMD-746
Shore A Hardness	80	
Heat Aged Physicals	70 hours@1000°C	
Tensile Strength	1135	
Ultimate Elongation	545%	
Shore A Hardness	82	

RS Series:
(Length per piece is 4 ft)

- ☑ RS-STANDARD
- ☐ RS-TEE
- ☐ RS-8
- ☐ RS-12

IMPORTANT: Since each construction project is unique, the appropriate selection and use of any product contained herein must be determined by competent architects, engineers and other appropriate professionals who are familiar with the specific requirements of the project in question.

HOHMANN & BARNARD, Inc.
30 Rasons Court | Hauppauge, NY 11788
CORPORATE HEADQUARTERS
T: 800.645.0616 F: 631.234.0683
www.h-b.com

Branch/Subsidiary Locations:
ALABAMA - ILLINOIS - MARYLAND
NEW YORK - PENNSYLVANIA - TEXAS
UTAH - CANADA

© HOHMANN & BARNARD, INC. - 2015

HOHMANN & BARNARD, INC.
a MiTek company

High Strength Systems: Adjustable Joint Reinforcement

270-ML Ladder

Mighty-Lok™ Adjustable Eye-Wire

Heavy Duty 1/4"Ø Compressed Leg Mighty-Lok® Hook, flattened and serrated to fit a 3/8" mortar joint satisfying code requirements for mortar bed thickness.

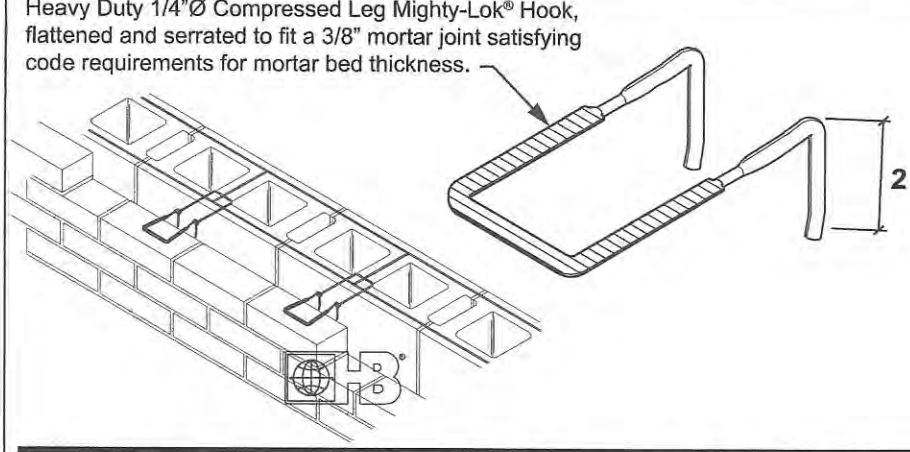

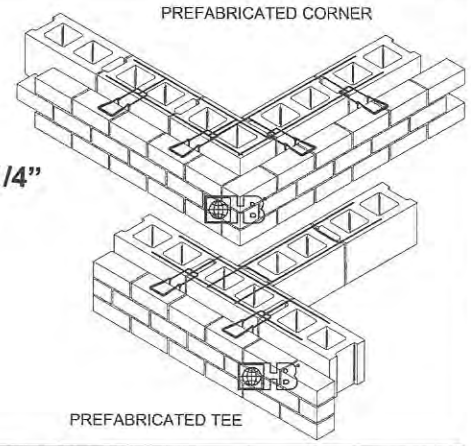

Hohmann & Barnard's Mighty-Lok Hook has been tested and designed to withstand over 290-lbf, in tension or compression, at maximum allowed offset (TMS 402/ACI 530 6.2.2.5.5.4) of 1¼" (disengagement of the pintle from the veneer anchor). These results exceed BIA recommendations and the capabilities of standard "round wire" hooks/pintles by over 100%, while maintaining the ASTM A1064/1064M wire specification.

EYE-WIRE WITH MIGHTY-LOK HOOKS (WORKING LOAD*)

CAVITY	0" OFFSET	1 ¼" OFFSET	2 ¼" OFFSET	TEST
4 ½"	937#	470#	238#	TENSION
4 ½"	1057#	448#	248#	COMPRESSION
7 ½"	875#	446#	249#	TENSION
7 ½"	950#	485#	239#	COMPRESSION

* WORKING LOAD DETERMINED AT .05" DEFLECTION

Tests were completed for 3" and 6" insulation with 1 ½" air cavity.

MATERIAL CONFORMANCE

Hohmann & Barnard joint reinforcement products conform to:
ASTM A951/A951M (Standard Specification for Steel Wire for Masonry Joint Reinforcement)
ACI / ASCE 530 (Building Code Requirements for Masonry Structures)

Wire (Carbon Steel): Prefabricated from cold-drawn steel wire conforming to **ASTM A1064/A1064M**
Tensile Strength - 80,000 p.s.i. | Yield Point - 70,000 p.s.i. minimum
Zinc Coating:
Hot-Dip Galvanized after fabrication: **ASTM A153/A153M-B2** (1.5 oz/ft²)
Wire (Stainless Steel): **ASTM A580/ASTM 580M** - AISI Type 304 (Type 316 available on special order)

Eye-Wire Diameters/Dimensions:
9 gauge (.148" or W1.7) or 3/16"Ø (.187" or W2.8)
Side Rods and Cross Rods available in any combination of the above.
Eyes and Hooks are 3/16"Ø standard.
Cross Rods welded 16" O.C. First Cross Rods welded 12" in from each end to allow lap splices per code requirements.

Packaging:
Packed 500' per bundle (50 pcs - 10' long)

U.S. Pat. No. 8,122,663 (Mighty-Lok Hook)

Eye-Wire Finish:
☑ Hot-Dip Galvanized | Stainless Steel ☐ Type 304 ☐ Type 316
Note: H&B recommends Stainless Steel for maximum protection against corrosion.

Eye-Wire Size:
☑ (S) Standard Weight: 9 GA Side Rods x 9 GA Cross Rods
☐ (EH) Extra Heavy: 3/16"Ø Side Rods x 9 GA Cross Rods
☐ (SHD) Super Heavy Duty: 3/16"Ø Side Rods x 3/16"Ø Cross Rods

Block Size: (Std. sizes: 4" - 16" wall, other widths available on special request.)
☐ 4" ☐ 6" ☑ 8" ☐ 10" ☐ 12" ☐ 14" ☐ 16"
Note: State cavity and/or insulation thickness when ordering.

1/4"Ø Mighty Lok® Hook Finish:
☑ Hot-Dip Galvanized | Stainless Steel ☐ Type 304 ☐ Type 316

1/4"Ø Mighty Lok® Hook Length:
☑ 3" ☐ 4" ☐ 4 ¾"
☐ 5 ¼" ☐ Custom _____

IMPORTANT: Since each construction project is unique, the appropriate selection and use of any product contained herein must be determined by competent architects, engineers and other appropriate professionals who are familiar with the specific requirements of the project in question.

HOHMANN & BARNARD, Inc.
CORPORATE HEADQUARTERS
30 Rasons Court | Hauppauge, NY 11788
T: 800.645.0616 F: 631.234.0683
www.h-b.com

Branch/Subsidiary Locations:
ALABAMA - ILLINOIS - MARYLAND
NEW YORK - PENNSYLVANIA - TEXAS
UTAH - CANADA

© HOHMANN & BARNARD, INC. - 2015

HOHMANN & BARNARD, INC.
a MiTek company

Ties & Anchors - Miscellaneous

344 - Rigid Partition Anchor

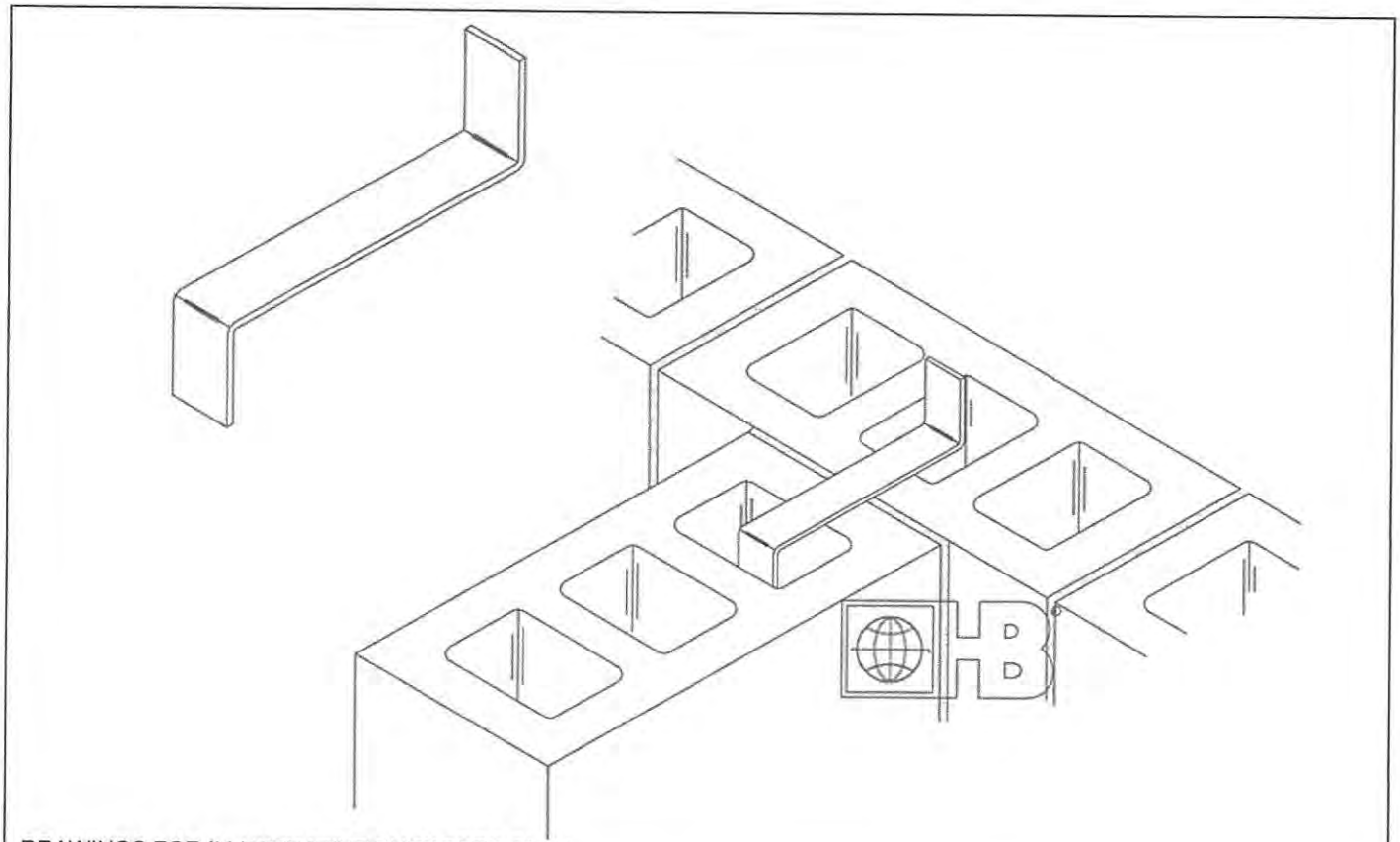

DRAWINGS FOR ILLUSTRATIVE PURPOSES ONLY

344 Rigid Partition Anchor for anchoring load bearing walls at intersections.

MATERIAL CONFORMANCE
Sheet Metal (Carbon Steel):
ASTM A1008/A1008M, ASTM A36/A36M (3/16" thick or greater)
Zinc Coating:
Hot-Dip Galvanized after fabrication: **ASTM A153/A153M** Class B
Note: Hohmann & Barnard will certify Hot-Dip Galvanized to a minimum of 2.0 oz/ft²

Sheet Metal (Stainless Steel):
ASTM A666, ASTM A480/480M, and **ASTM A240/A240M**
AISI Type 304 or **316**

Dimensions:
Made to order from 1¼" or 1 ½" wide x 1/8" or 1/4" thick bar stock x any length (state when ordering).
Standard lengths are 24" and bends are 2".

Heavy duty carbon steel plate manufactured from 99% recycled material. Stainless Steel manufactured from an average of 60% recycled material.

Finishes:
☐ Plain Steel
☑ Hot-Dip Galv. | Stainless Steel: ☐ Type 304 ☐ Type 316

Note: Hohmann & Barnard recommends Stainless Steel for maximum protection against corrosion.

Thickness:
☐ 1/8" ☑ 1/4"
☐ 3/16" ☐ Other _____

Width:
☐ 1" ☑ 1 ½"
☐ 1 ¼" ☐ 2"

Length:
☑ 24" (standard) ☐ Other _____

IMPORTANT: Since each construction project is unique, the appropriate selection and use of any product contained herein must be determined by competent architects, engineers and other appropriate professionals who are familiar with the specific requirements of the project in question.

HOHMANN & BARNARD, Inc.
30 Rasons Court | Hauppauge, NY 11788
CORPORATE HEADQUARTERS
T: 800.645.0616 F: 631.234.0683
www.h-b.com

Branch/Subsidiary Locations:
ALABAMA - ILLINOIS - MARYLAND
NEW YORK - PENNSYLVANIA - TEXAS
UTAH - CANADA

© HOHMANN & BARNARD, INC. - 2015

FOAMULAR® 250
Extruded Polystyrene (XPS) Rigid Foam Insulation

Description

Owens Corning® FOAMULAR® 250 Extruded Polystyrene (XPS) Insulation is a closed cell, moisture-resistant rigid foam board well suited to meet the needs for a wide variety of building applications. FOAMULAR® 250 XPS insulation is great for many residential and commercial construction applications such as wall furring, perimeter/foundation, cavity wall, pre-cast concrete, under slab, crawl spaces, sheathing and other applications.

Features

- Excellent long-term stable insulating performance at R-5[1] per inch
- Exceptional moisture resistance, long-term durability
- Lightweight, durable rigid foam panels are easy to handle and install
- Easy to saw, cut or score

1. R means the resistance to heat flow; the higher the R-value, the greater the insulating power.

Applications

- Slows the transmission of water vapor and moisture in masonry walls
- Provides continuous insulation over wood or steel stud framing, in insulated concrete sandwich panel walls, in masonry unit cavity walls, or when used with non-penetrating, surface mounted furring systems over masonry or concrete walls
- Insulates and retains its properties in below grade perimeter and foundation applications, or directly beneath the concrete slab to complement the insulating sheathing envelope around the building framing

Physical Properties[2]

Property	Test Method[3]	Value
Thermal Resistance[4], R-value (180 day) minimum, hr•ft²•°F/Btu (RSI, °C•m²/W) @ 75°F (24°C) mean temperature	ASTM C518	
¾" Thickness		4.0 (0.70)
1" Thickness		5.0 (0.88)
1½" Thickness		7.5 (1.32
2" Thickness		10 (1.76)
2½" Thickness		12.5 (2.20)
3" Thickness		15 (2.64)
4" Thickness		20 (3.52)
@ 40°F (4.4°C) mean temperature		
¾" Thickness		4.3 (0.76)
1" Thickness		5.4 (0.95)
1½" Thickness		8.1 (1.43)
2" Thickness		10.8 (1.90)
2½" Thickness		13.5 (2.38)
3" Thickness		16.2 (2.85)
4" Thickness		21.6 (3.80)
Long Term Thermal Resistance, LTTR-value[4], minimum hr•ft²•°F/Btu (RSI, °C•m²/W) @ 75°F (24°C) mean temperature	CAN/ULC S770-03	
¾" Thickness		N/A
1" Thickness		5.0 (0.88)
1½" Thickness		7.8 (1.37)
2" Thickness		10.6 (1.87)
2½" Thickness		13.4 (2.36)
3" Thickness		16.2 (2.85)
4" Thickness		22.0 (3.87)
Compressive Strength[5], minimum psi (kPa)	ASTM D1621	25 (172)
Flexural Strength[6], minimum psi (kPa)	ASTM C203	50 (345)
Water Absorption[7], maximum % by volume	ASTM C272	0.3
Water Vapor Permeance[8], maximum perm (ng/Pa•s•m²)	ASTM E96	1.5 (86)
Dimensional Stability, maximum % linear change	ASTM D2126	2.0
Flame Spread[9, 10]	ASTM E84	10
Smoke Developed[9, 10, 11]	ASTM E84	175
Oxygen Index[12], minimum % by volume	ASTM D2863	24
Service Temperature, maximum °F (°C)		165 (74)
Linear Coefficient of Thermal Expansion, in/in/°F (m/m°C)	ASTM E228	3.5×10^{-5} (6.3×10^{-5})

2. Properties shown are representative values for 1" thick material, unless otherwise specified.
3. Modified as required to meet ASTM C578.
4. R means the resistance to heat flow; the higher the value, the greater the insulation power. This insulation must be installed properly to get the marked R-value. Follow the manufacturer's instructions carefully. If a manufacturer's fact sheet is not provided with the material shipment, request this and review it carefully. R-values vary depending on many factors including the mean temperature at which the test is conducted, and the age of the sample at the time of testing. Because rigid foam plastic insulation products are not all aged in accordance with the same standards, it is useful to publish comparison R-value data. The R-value for FOAMULAR® XPS Insulation is provided from testing at two mean temperatures, 40°F and 75°F, and from two aging (conditioning) techniques, 180 day real-time aged (as mandated by ASTM C578) and a method of accelerated aging sometimes called "Long Term Thermal Resistance" (LTTR) per CAN/ULC S770-03. The R-value at 180 day real-time age and 75°F mean temperature is commonly used to compare products and is the value printed on the product.
5. Values at yield or 10% deflection, whichever occurs first.
6. Value at yield or 5%, whichever occurs first.
7. Data ranges from 0.00 to value shown due to the level of precision of the test method.
8. Water vapor permeance decreases as thickness increases.
9. These laboratory tests are not intended to describe the hazards presented by this material under actual fire conditions.
10. Data from Underwriters Laboratories Inc.® classified. See Classification Certificate U-197.
11. ASTM E84 is thickness-dependent, therefore a range of values is given.

Product and Packaging Data

Material	Packaging
Extruded polystyrene closed-cell foam, ASTM C578 Type IV, 25 psi minimum	Shipped in poly-wrapped units with individually wrapped or banded bundles.

Thickness (in)	Product Dimensions Thickness (in) x Width (in) x Length (in)	Pallet (Unit) Dimensions (typical) Width (ft) x Length (ft) x Height (ft)	Square feet per Pallet	Board feet per Pallet	Bundles per Pallet	Pieces per Bundle	Pieces per Pallet	Edges
¾	¾ x 24 x 96	4 x 8 x 8	4,096	3,072	8	32	256	Square Edge, Scored Square Edge, Tongue & Groove
	¾ x 24 x 96 (half unit)	4 x 8 x 4	2,048	1,536	4	32	128	
	¾ x 48 x 96	4 x 8 x 8	4,096	3,072	8	16	128	
	¾ x 48 x 96 (half unit)	4 x 8 x 4	2,048	1,536	4	16	64	
	¾ x 48 x 108	4 x 9 x 8	4,608	3,456	8	16	128	
	¾ x 48 x 120	4 x 10 x 8	5,120	3,840	8	16	128	
1	1 x 24 x 96	4 x 8 x 8	3,072	3,072	8	24	192	
	1 x 24 x 96 (half unit)	4 x 8 x 4	1,536	1,536	4	24	96	
	1 x 48 x 96	4 x 8 x 8	3,072	3,072	8	12	96	
	1 x 48 x 96 (half unit)	4 x 8 x 4	1,536	1,536	4	12	48	
	1 x 48 x 108	4 x 9 x 8	3,456	3,456	8	12	96	
1½	1.5 x 24 x 96	4 x 8 x 8	2,048	3,072	8	16	128	
	1.5 x 48 x 96	4 x 8 x 8	2,048	3,072	8	8	64	
2	2 x 24 x 96	4 x 8 x 8	1,536	3,072	8	12	96	
	2 x 24 x 96 (half unit)	4 x 8 x 4	768	1,536	4	12	48	
	2 x 24 x 108	4 x 9 x 8	1,728	3,456	8	12	96	
	2 x 48 x 96	4 x 8 x 8	1,536	3,072	8	6	48	
2½	2.5 x 24 x 96	4 x 8 x 8	1,152	2,880	8	9	72	
	2.5 x 48 x 96	4 x 8 x 8	1,152	2,880	4	9	36	
3	3 x 24 x 96	4 x 8 x 8	1,024	3,072	8	8	64	
	3 x 48 x 96	4 x 8 x 8	1,024	3,072	8	4	32	
4	4 x 24 x 96	4 x 8 x 8	768	3,072	8	6	48	
	4 x 48 x 96	4 x 8 x 8	768	3,072	8	3	24	

Available lengths and edge configurations vary by thickness. Other sizes may be available upon request. Consult your local Owens Corning representative for availability.

- FOAMULAR® 250 XPS insulation is great for below grade applications. FOAMULAR® XPS insulation is resistant to degradation from the components of common soils and will retain its insulating performance characteristics even after prolonged exposure to moisture
- Provides a weather resistant barrier (when joints are sealed) to enhance the building's resistance to air and moisture penetration

Technical Information

- FOAMULAR® 250 XPS insulation is a non-structural material and must be installed on framing which is independently braced and structurally adequate to meet required construction and service loading conditions.
- FOAMULAR® XPS insulation can be exposed to the exterior during normal construction cycles. During that time some fading of color may begin due to UV exposure, and, if exposed for extended periods of time, some degradation or "dusting" of the polystyrene surface may begin. It is best if the product is covered within 60 days to minimize degradation. Once covered, the deterioration stops, and damage is limited to the thin top surface layers of cells. Cells below are generally unharmed and still useful insulation.
- FOAMULAR® XPS insulation has a maximum service temperature of 165°F. Install only as much FOAMULAR® XPS insulation as can be covered in the same day. For horizontal applications, always turn the print side down so the black print does not show to the sun which may at times act as a solar collector, raising the temperature of the foam under the print to an unacceptable level. Provide a final finish covering or temporary white opaque covering to avoid possible damage when dark (non-white) surfaces are used over FOAMULAR® XPS insulation. Do not cover FOAMULAR® XPS insulation either stored (factory wrapped or unwrapped), or partially installed, with dark colored (non-white), or clear (non-opaque) coverings and leave it exposed to the sun. Examples of such coverings include but are not limited to filter fabrics, membranes, temporary tarps, clear polyethylene, etc. If improperly covered, and exposed to the right combination of sun, time and temperature, FOAMULAR® XPS insulation deformation damage may occur rapidly. See Owens Corning publication "Heat Build Up Due to Solar Exposure" (Pub. No. 10015704) for more information.
- This product is combustible. A protective barrier or thermal barrier is required to separate this product from interior living or conditioned spaces as specified in the appropriate building code.
- All construction should be evaluated for the necessity to provide vapor retarders. See current ASHRAE Handbook of Fundamentals.

Standards, Codes Compliance

- Meets ASTM C578 Type IV
- UL Classification Certificate U-197[12]
- Code Evaluation Report UL ER8811-01[12]
- ASTM E119 Fire Resistance Rated Wall Assemblies[12]
- Meets California Quality Standards; HUD UM #71a
- Compliance verification by RADCO (AA-650)

12. Visit www.owenscorning.com for more details.

Limited Warranty

FOAMULAR® XPS insulation limited lifetime warranty maintains 90% of its R-value for the lifetime of the building and covers all ASTM C578 properties. See actual warranty for complete details, limitations and requirements at www.owenscorning.com.

Environmental and Sustainability

Owens Corning is a worldwide leader in building material systems, insulation and composite solutions, delivering a broad range of high-quality products and services. Owens Corning is committed to driving sustainability by delivering solutions, transforming markets and enhancing lives. More information can be found at www.owenscorning.com.

Notes

For additional information, refer to the Safe Use Instruction Sheet (SUIS) found in the SDS Database via http://sds.owenscorning.com.

Not for use in roofing. For roofing applications, use FOAMULAR® THERMAPINK® XPS insulation.

Certifications and Sustainable Features

- Certified by SCS Global Services to contain a minimum of 20% recycled content pre-consumer
- GREENGUARD Certified products are certified to GREENGUARD standards for low chemical emissions into indoor air during product usage. For more information, visit ul.com/gg
- Environmental Product Declaration (EPD) has been certified by UL Environment
- Qualified as an ENERGY STAR® product, under the U.S. Environmental Protection Agency and the U.S. Department of Energy
- Utilizing FOAMULAR® XPS insulation can help builders achieve green building certifications including the U.S. Green Building Council's Leadership in Energy and Environmental Design (LEED®) certification
- Approved under the Home Innovation Research Labs NGBS Green Certification Program

Disclaimer of Liability

Technical information contained herein is furnished without charge or obligation and is given and accepted at recipient's sole risk. Because conditions of use may vary and are beyond our control, Owens Corning makes no representation about, and is not responsible or liable for the accuracy or reliability of data associated with particular uses of any product described herein.

SCS Global Services provides independent verification of recycled content in building materials and verifies recycled content claims made by manufacturers. For more information, visit www.SCSglobalservices.com.

LEED® is a registered trademark of the U.S. Green Building Council.

OWENS CORNING FOAM INSULATION, LLC
ONE OWENS CORNING PARKWAY
TOLEDO, OHIO, USA 43659

1-800-GET-PINK®
www.owenscorning.com

Pub. No. 43522-K. Printed in U.S.A. August 2016.
THE PINK PANTHER™ & © 1964–2016 Metro-Goldwyn-Mayer Studios Inc. All Rights Reserved. The color PINK is a registered trademark of Owens Corning. © 2016 Owens Corning. All Rights Reserved.

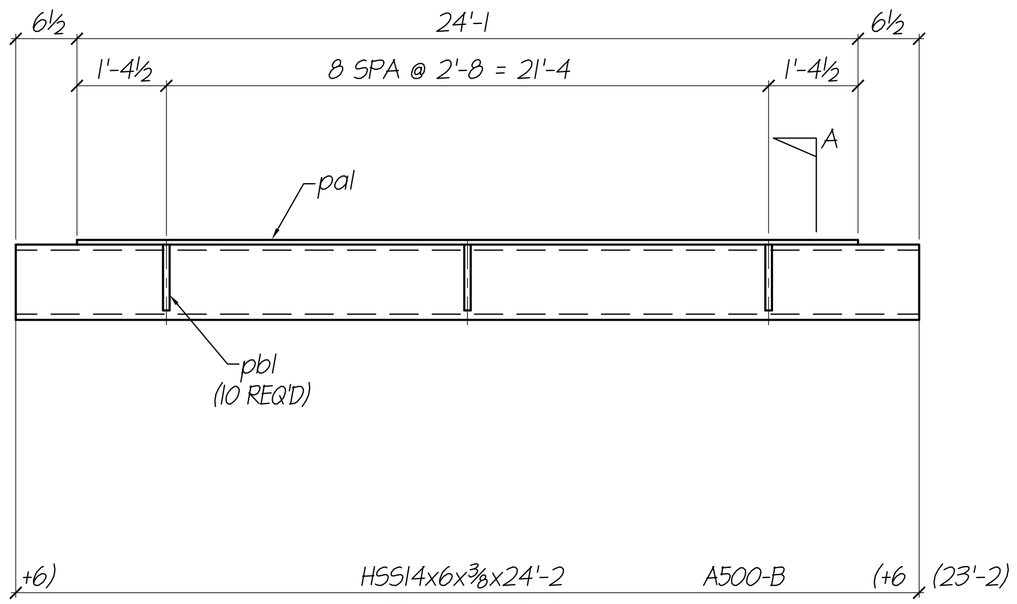

ONE - MK: IB1

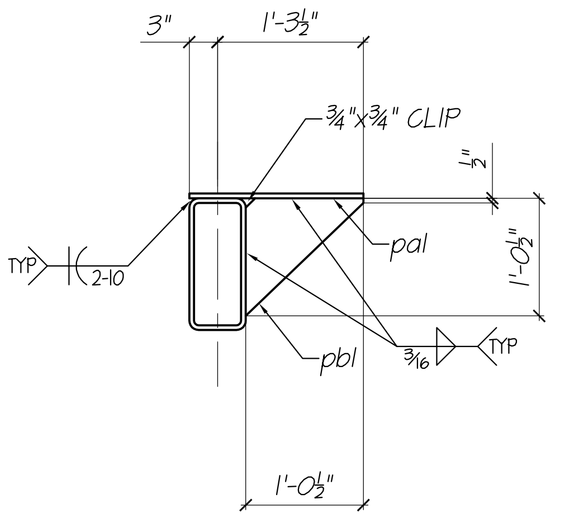

SECTION A

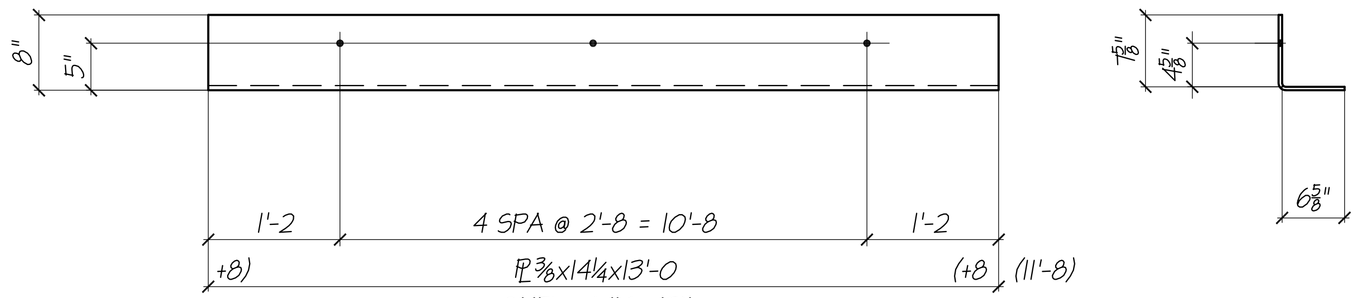

ONE - MK: IP1

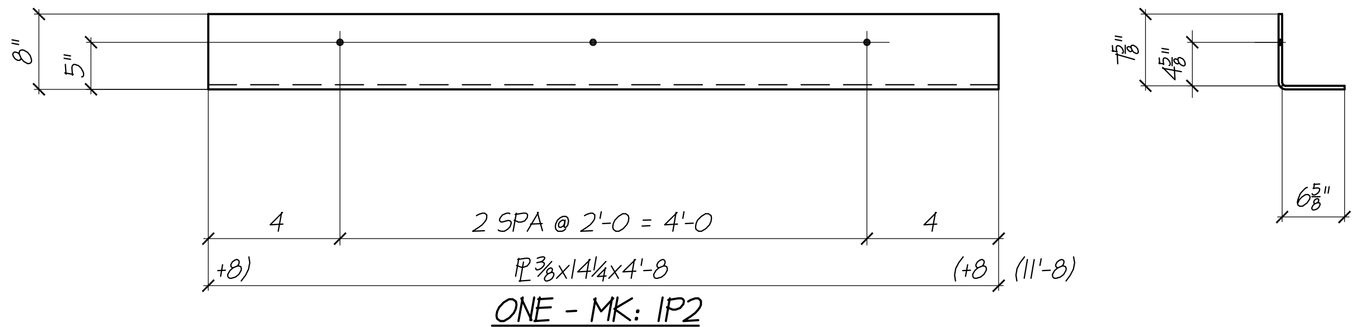

ONE - MK: IP2

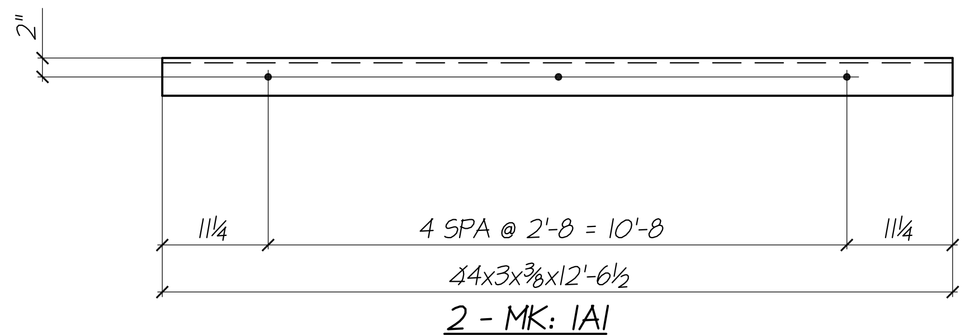

2 - MK: IA1

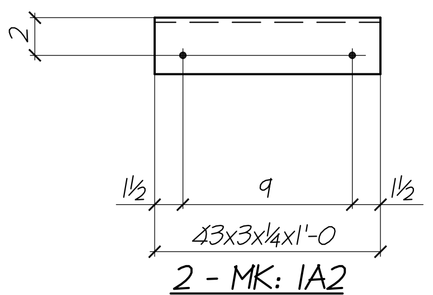

2 - MK: IA2

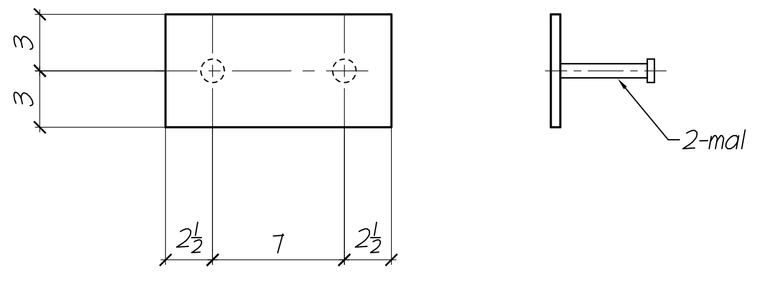

BRG PL½x6x1'-0

6 - BEARING PLATES MK: BP1

NO PAINT

BILL OF MATERIAL: JOB SHA – MAINTENANCE SHOP **DWG. #** 1

SHIPPING MARK	ASS'Y MARK	QTY	DESCRIPTION	LENGTH FEET	LENGTH INCHES	REMARKS
IB1		ONE	HSS 14x6x⅜	24	2	A500-B
	pal	ONE	PL ½ x 18½	24	1	
	pbl	9	PL ⅜ x 12½	1	0½	
IP1		ONE	PL ⅜ x 14¼	13	0	BENT
IP2		ONE	PL ⅜ x 14¼	4	8	BENT
IA1		2	∠4 x 3 x ⅜	12	6½	
IA2		2	∠3 x 3 x ¼	1	0	
BP1		6	PL ½ x 6	1	0	
	mal	12	¾" Φ HEADED STUD	0	5	

SHOP NOTES		DATE	ACTION	REVISIONS	
MATERIAL: ASTM–A36	UNO	7/28/17	FOR APPROVAL	REV #	DATE
HOLES: 13/16" ø	UNO	8/18/17	FABRICATION	0	--
WELDS: E70XX					
PAINT: ONE SHOP COAT PRIMER					
CLEAN: SSPC–SP2					

capital welding
One Carnegie Court
Waldorf, Maryland 20602
301-843-7666 • Fax 301-843-7913

PROJECT	SHA – MAINTENANCE SHOP	DWN: CWI/BS	DATE 5/22/17
LOCATION	PRINCE FREDERICK, MARYLAND	CHK'D: CWI/djh	DATE .
CONTRACTOR	S E DAVIS		
ARCH/ENGR	–	JOB # 17–065	
DETAILS OF	SHOP DRAWING	DWG # 1	

NEW MILLENNIUM
BUILDING SYSTEMS
WWW.NEWMILL.COM

SALES FAX

BUTLER, IN	(260) 868-6002
CONTINENTAL, OH	(419) 596-3120
FLORENCE, SC	(843) 669-0675
LAKE CITY, FL	(386) 466-1302
SALEM, VA	(540) 389-0378

DATE: 7/28/17

JOIST BILL OF MATERIAL

PAINT: GRAY SHEET: 1 of 1

JOB NAME: SHA MAINTENANCE SHOP	CUST. JOB #: 17-065	NMBS JOB #: 1916-0617
LOCATION: PRINCE FREDERICK, MD	DETAILER: DJH	CHECKER:

NET UPLIFT = 10 P.L.F.

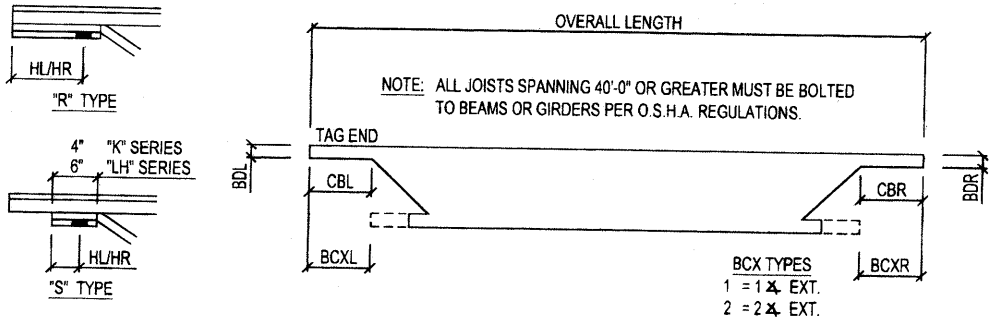

STANDARD UNLESS NOTED OTHERWISE ON BILL

	"K" SERIES	"LH" SERIES
BDL, BDR	= 21/2"	5"
CBL, CBR	= 4"	6"
SLOTS	= 9/16" x 11/2"	13/16" x 11/2"
GAGE	= 31/2"	4"
BCXL, BCXR	= NONE	NONE

NOTE: IF 13/16" x 1 1/2" SLOTS ARE REQ'D. FOR "K" SERIES JOISTS, GAGE = 4".

QTY. (THIS SHT.)
K: 2
LH:
JS:
HDR:

JOIST MARK	QTY.	JOIST SIZE	OVERALL LENGTH	CBL		CBR		SEAT DEPTH		BCXL		BCXR		PUNCHED SEATS			NOTES OR NOTE #
				LENGTH	TYPE	LENGTH	TYPE	BDL	BDR	LENGTH	TYPE	LENGTH	TYPE	HL	HR	GA.	
J1	2	16K4	24'-2	6"	R	6"	R	3½	3½								

NEW MILLENNIUM
BUILDING SYSTEMS
WWW.NEWMILL.COM

SALES FAX
BUTLER, IN (260) 868-6002
CONTINENTAL, OH (419) 596-3120
FLORENCE, SC (843) 669-0675
LAKE CITY, FL (386) 466-1302
SALEM, VA (540) 389-0378

DATE: 7/28/17

BRIDGING BILL OF MATERIAL

PAINT: GRAY SHEET: 1 of 1

JOB NAME: SHA MAINTENANCE SHOP	CUST. JOB #: 17-065	NMBS JOB #: 1916-0617
LOCATION: PRINCE FREDERICK, MD	DETAILER: DJH	CHECKER:

BRIDGING TYPES:

H = WELDED HORIZONTAL (SUPPLIED IN 20'-0" PCS)
W = WELDED DIAGONAL
B = BOLTED HORIZONTAL
X = BOLTED DIAGONAL

NOTE: JOIST DIMENSIONS AND SLOPE INFORMATION MUST BE PROVIDED FOR BRIDGING TYPES W, B & X
NOTE: BOLT DIAMETER 3/8", 1/2" OR 5/8", MUST BE PROVIDED FOR BRIDGING TYPES B & X

JOIST DIMENSIONS:

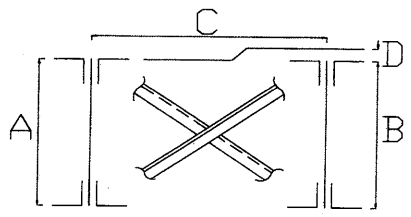

SPECIFY IF TO A BEAM OR WALL.
"D" IS CHANGE IN ELEVATION (+/-).

SLOPE 1 & SLOPE 2:

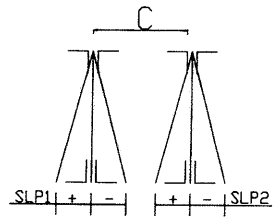

PIECES	BRIDGING MARK	ANGLE SIZE	BRIDGING TYPE	BOLT DIAMETER	"A"=JOIST MARK AND DEPTH	"B"=JOIST MARK AND DEPTH	SPACING "C"	ELEV. "D"	SLOPE 1	SLOPE 2
3	H1	1¼	H							

NEW MILLENNIUM
BUILDING SYSTEMS

SALES FAX
BUTLER, IN (260) 868-6002
CONTINENTAL, OH (419) 596-3120
FLORENCE, SC (843) 669-0675
LAKE CITY, FL (386) 466-1302
SALEM, VA (540) 389-0378

DATE: 7/28/17

STEEL DECK BILL OF MATERIAL

SHEET: 1 of 1

JOB NAME: SHA MAINTENANCE SHOP	CUST. JOB #: 17-065	NMBS JOB #: 1916-0617
LOCATION: PRINCE FREDERICK, MD	DETAILER: DJH	CHECKER:

SEQ.:			SEQ.:			SEQ.:		
TYPE: B	GAGE: 20		TYPE:	GAGE:		TYPE:	GAGE:	
WIDTH: 36	FINISH: G90		WIDTH:	FINISH:		WIDTH:	FINISH:	
PIECES	LENGTH	BUNDLE #	PIECES	LENGTH	BUNDLE #	PIECES	LENGTH	BUNDLE #
8	12'-4							

TOTAL PIECES:		TOTAL PIECES:	TOTAL PIECES:
TOTAL SQUARES:		TOTAL SQUARES:	TOTAL SQUARES:
WELD WASHERS:		WELD WASHERS:	WELD WASHERS:
SCREWS:		SCREWS:	SCREWS:
SUMP PANS:		SUMP PANS:	SUMP PANS:

REMARKS:

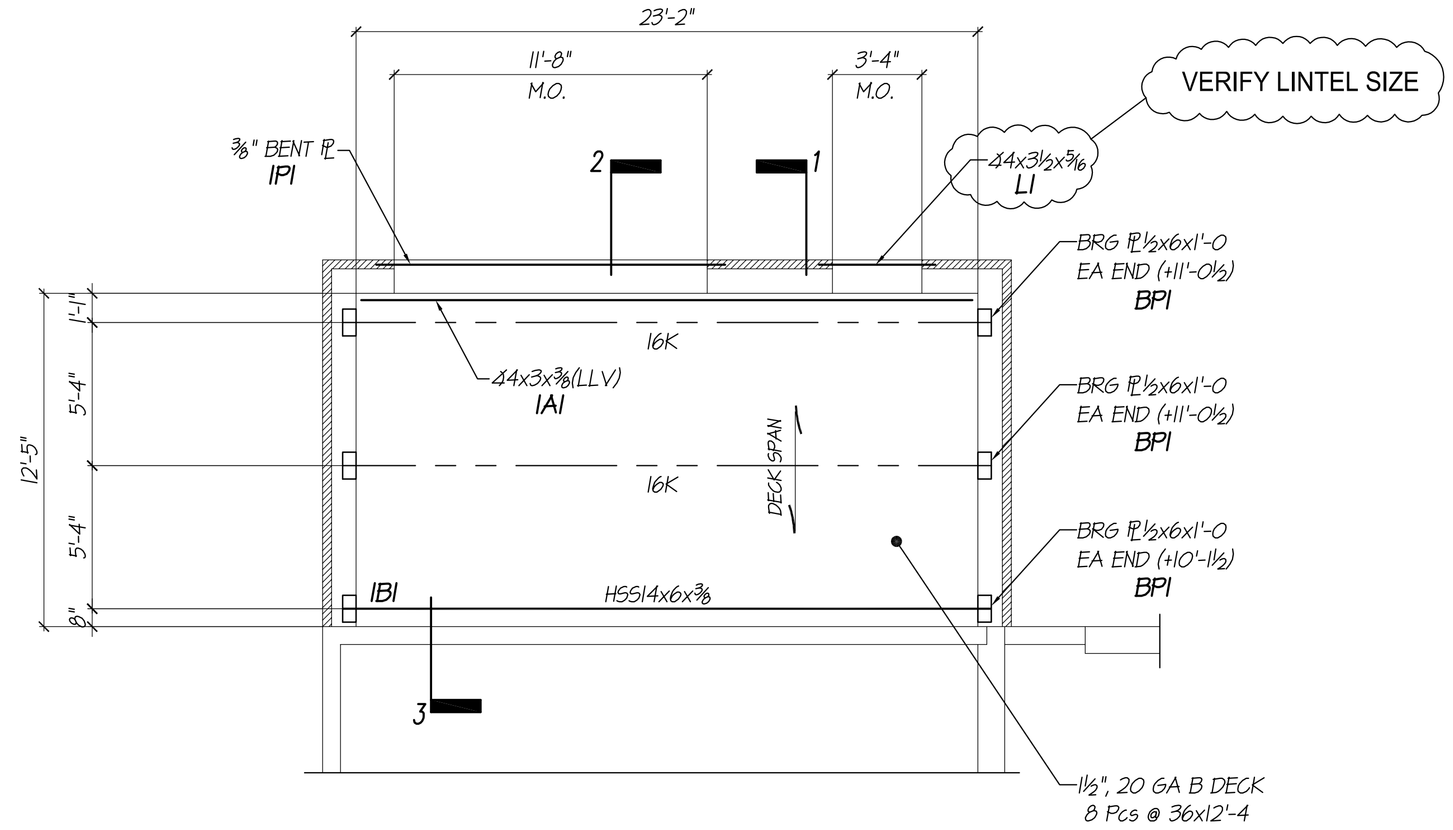

PARTIAL ROOF PLAN @ ADDITION

ALL ELEVATIONS NOTED +X'-XX ABOVE FIN FLOOR
ALL TUBE STEEL TO BE ASTM-A500, GRADE B
ALL STEEL BAR, PLATE AND ANGLE TO BE ASTM-A36
ALL STEEL TO HAVE ONE SHOP COAT PRIMER, U.N.O.
ALL FIELD WELDS TO BE WITH E70XX ELECTRODES
DECK TO BE 1½" TYPE B, 20 GA, GALVANIZED

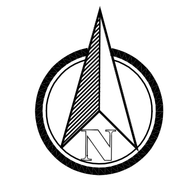

PLAN NORTH

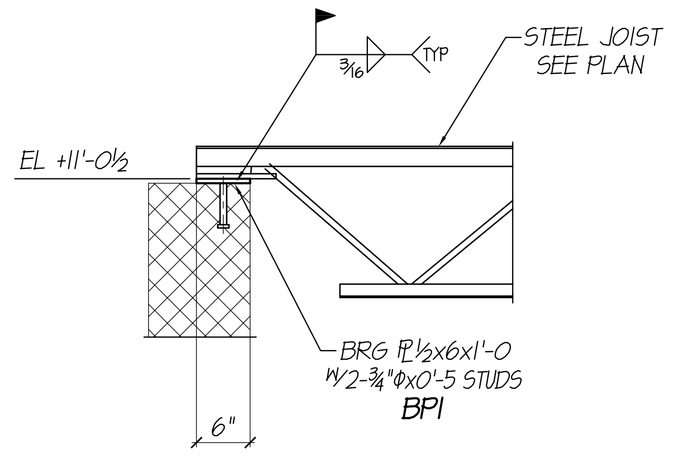

TYPICAL JOIST BEARING DETAIL

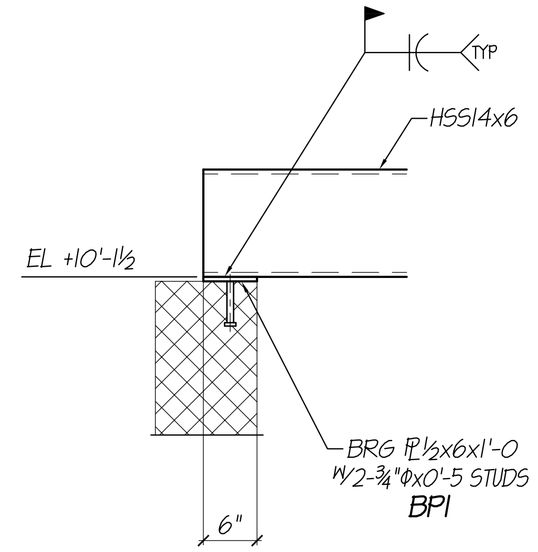

TUBE BEAM BEARING DETAIL

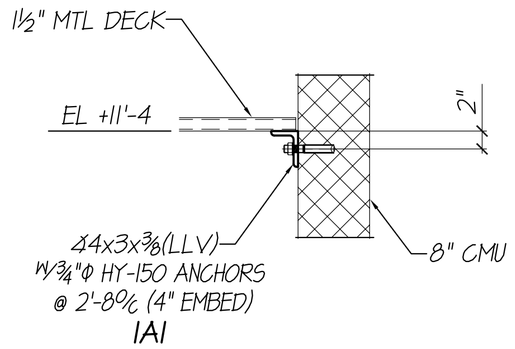

SECTION 1

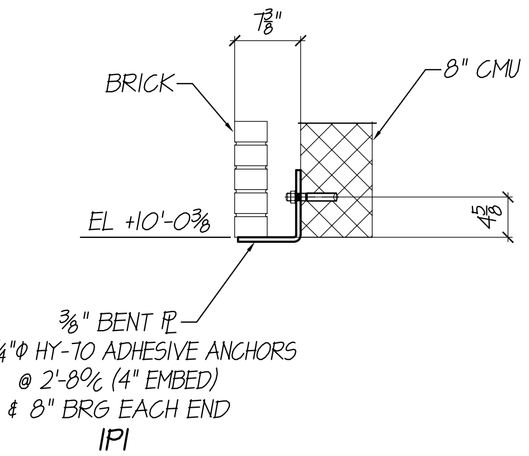

SECTION 2

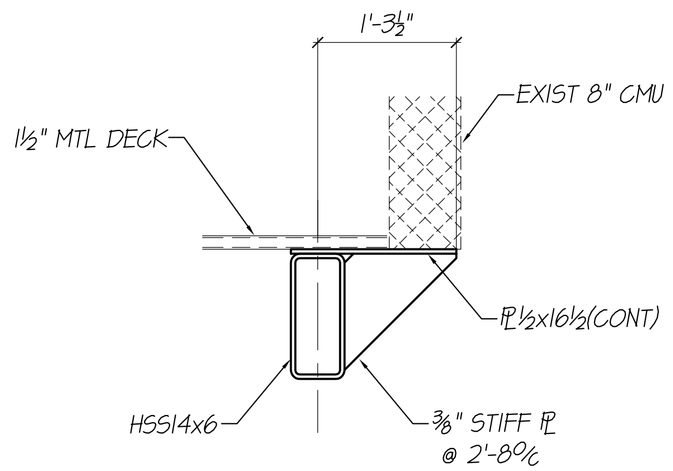

SECTION 3

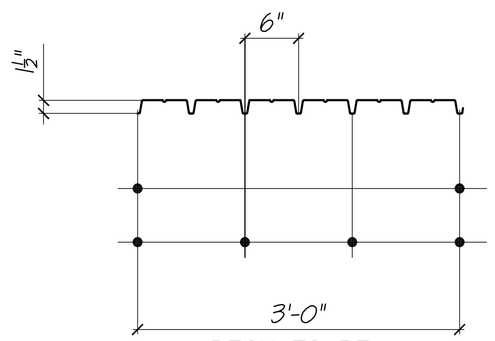

DECK TO BE:

TYPE B GAUGE 20
FINISH G60 GALV
Sp. .235 in.3 Sn. .247in.3
Ip .213 in.4 Fy min. 33 ksi

FASTENING PATTERN

DECK / DECK (SIDELAP)
10 TEK SCREWS
@ 3'-0% MAX

DECK / SUPPORT
5/8" Φ PUDDLE WELDS
AT 12" o/c (MAX.)

DATE	ACTION
5/26/17	FOR APPROVAL
-	-
-	-
-	-

REV #	DATE	REVISION
-	-	-
-	-	-
-	-	-
-	-	-

One Carnegie Court
Waldorf, Maryland 20602
Ph: 301-843-7666 * Fax: 301-843-7913

capital welding

PROJECT	SHA - MAINTENANCE SHOP
LOCATION	PRINCE FREDERICK, MARYLAND
CONTRACTOR	S E DAVIS
ARCH/ENGR	
DETAILS OF	PARTIAL ROOF PLAN

DWN: CWI\BS	DATE 5/18/17
CHK'D: CWI\	DATE
JOB #	17-065
DWG #	E1

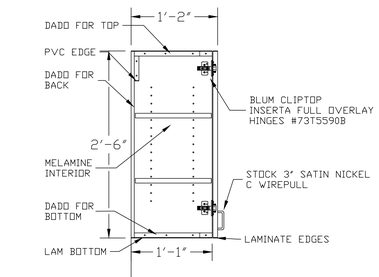

LAMINATE COLOR TBD
SPECIFICS AND DETAILS VARY

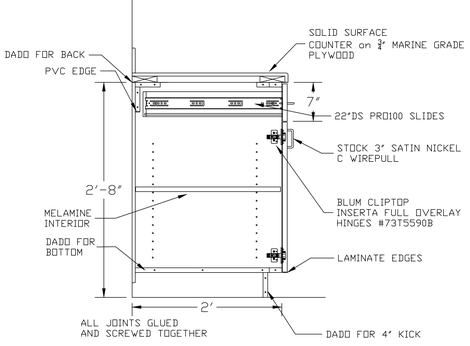

B SECTION WALL AND BASE

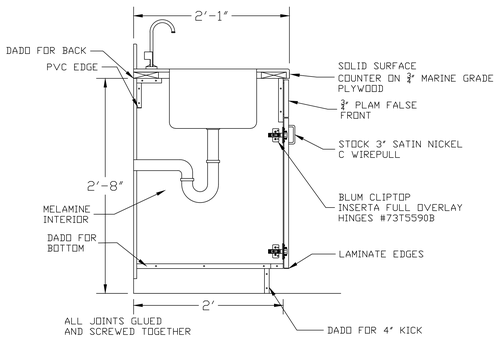

A SECTION SINK BASE

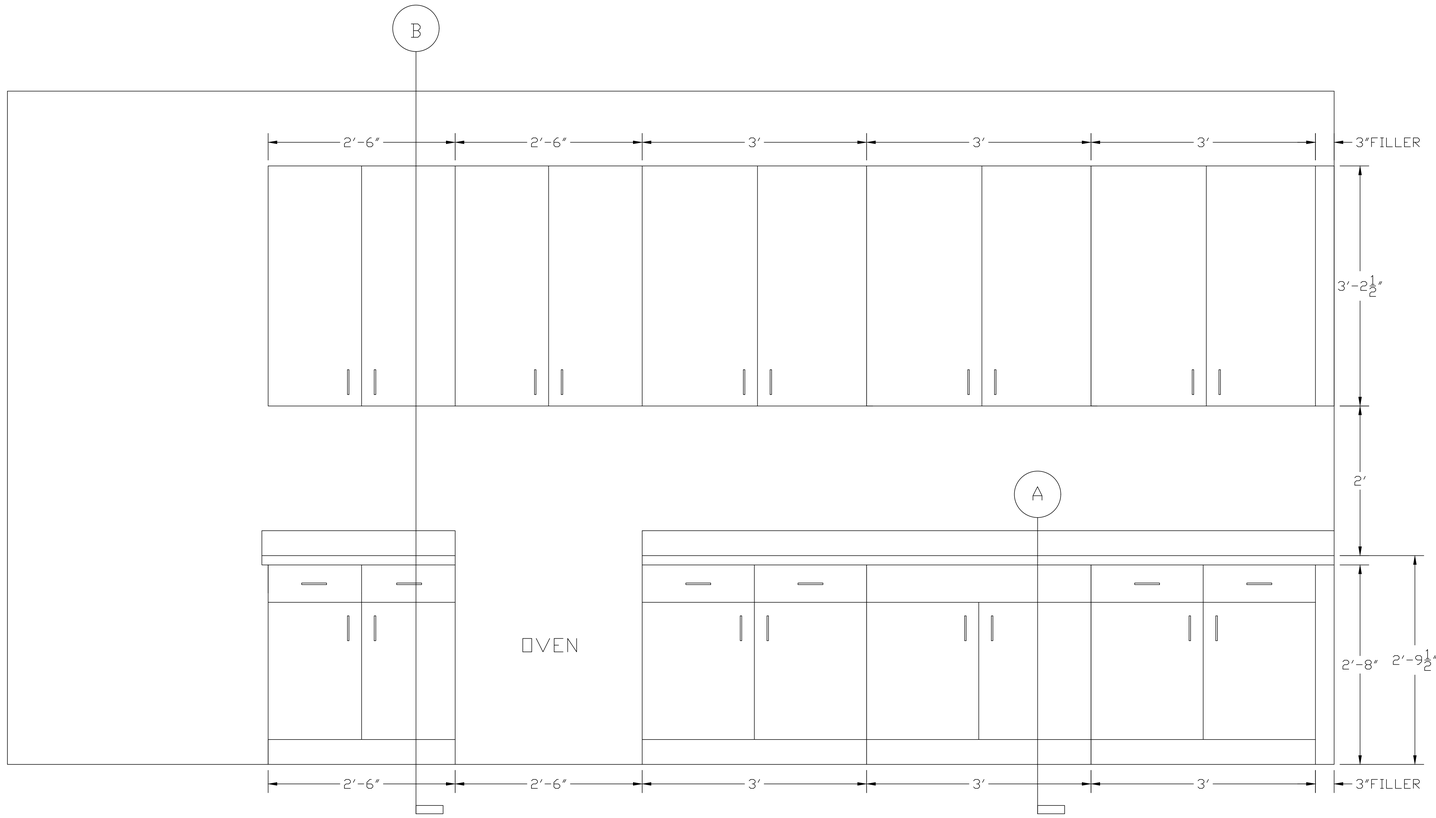

8/A-601 KITCHEN ELEVATION

SHA KITCHEN	
9-25-17	ELEVATIONS

DEAN CABINETRY
www.dean-lumber.com

Applied Technologies, LLC
P. O. Box 18476
Fairfield, OH 45018
1-877-277-5948
(513) 939-3767

This specification utilizes the Construction Specifications Institute (CSI) Manual of Practice, including MasterFormat and PageFormat. This is a manufacturer-specific proprietary product specification using the proprietary method of specifying applicable to project specifications and master guide specifications. Optional text is indicated by bracket [] delete optional text in final copy of specification. Specifier notes typically precede specifications text; delete notes in final copy of text specification. Trade/brand names with appropriate symbols typically are used in Specifier Notes; symbols are not used in specification text. Metric conversion, where used is soft metric conversion.

The specification specifies J-Cote WB Waterproofing Membrane. This product is manufactured by Applied Technologies LLC. Revise section number and title to suit project requirements, specification practices and section content. Refer to CSI MasterFormat for other section numbers and titles.

Section 07 14 16
Cold Fluid Applied Waterproofing
J-Cote WB Waterproofing Membrane

Part 1 General

1.01 SUMARRY

A. Section Includes: J-Cote WB Fluid-Applied Waterproofing applied to the exterior face of below grade concrete foundations and retaining walls.

Specifier Note: Article below may be omitted when specifying manufacturer's proprietary products and recommended installation. Retain Reference Article when specifying products and installation by an industry reference standard. If retained, list standard reference in this section. Indicate issuing authority name, acronym, standard designation and title. Establish policy for indication edition date of standard referenced. Conditions of the Contract or Division 1 References Section may establish the edition date of standards. This article does not require compliance with standard, but is merely a listing of references used. Article below should list only those industry standards referenced in this section

B. Related Sections:
   1. Section 02320-Backfill
   2. Section 02620-Subdrainage
   3. Section 03300-Cast in Place Concrete
   4. Section 07212-Board Insulation: perimeter and horizontal insulation

1.02 REFERENCES

A. American Society for Testing and Materials (ASTM)
   1. ASTM C-719 Standard Test Method for Adhesion and Cohesion of Elastomeric Joint Sealants Under Cyclic Movement (Hockman Cycle)
   2. ASTM C-836 Standard Specification for High Solids Content, Cold Liquid Applied Elastomeric Waterproofing Membrane for use with Separate Wearing Course.
   3. ASTM D-2939 Standard Test Methods for Emulsified Bitumens Used as Protective Coatings
   4. ASTM E-96 Standard Test Method for Water Vapor Transmission of Materials.

1.03 SUBMITTALS

A. General: Submit Listed Submittals in accordance with Conditions of the Contract and Division 1 Submittal Procedures Section.

B. Product Data: Submit manufacturer's product data and installation instructions.

C. Quality Assurance/Control Submittals: Submit the following:

1. Certificates: Submit certificate that applicator complies with the requirements of this section.

Specifier Note: Article below should include prerequisites, standards. Limitations and criteria that establish an overall level of quality for products and workmanship for this section. Coordinate article below with Division 1 Quality Assurance Section.

1.04 QUALITY ASSURANCE

Specifier Note: Paragraph below should list obligations for compliance with specific code requirements particular to this section. General statements to comply with a particular code are typically addressed in Conditions of the Contract and Division 1 Regulatory Requirements Section. Repetitive statements should be avoided.

A. Applicator Qualifications: Utilize an applicator trained and approved by waterproofing manufacturer.

B. Regulatory Requirements and Approvals: Comply with requirements of the following:

1. ICC Evaluation Service, Inc (ICC-ES)

a. Legacy Report 98-59.01

Specifier Note: Article below should include special and unique requirements. Coordinate article below with Division 1 Product Requirements Section.

1.05 DELIVERY, STORAGE, & HANDLING

A. General; Comply with Division 1 Product Requirement Section

B. Delivery: Deliver materials in manufacturer's original, unopened, undamaged containers with identification labels intact.

C. Storage and Protection: Store materials protected from exposure to harmful environmental conditions and at temperature and humidity conditions recommended by the manufacturer.

1.06 PROJECT/SITE CONDITIONS

A. Environmental Requirements: Comply with application temperature range 0- 150^{0}F (-18-66^{0}C)

1.07 Warranty

A. Waterproofing Warranty: Upon completion and acceptance of the work required by this section, the waterproofing materials manufacturer will provide a written five (5) year material warranty. Issuance of Manufacturer's Material Warranty requires the following: (1) Manufacturer's Approved Applicator to install J-Cote WB Waterproofing. Manufacturer's warranty shall be independent from any other warranties made by the Contractor under requirements of the Contract Documents and may run concurrent with said warranties.

PART 2 PRODUCTS

Specifier Note: Retain article below for proprietary method specification. Add product attributes, performance characteristics, material standards and descriptions as applicable. Use of such phrases as or equal" or "or approved equal" or similar phrases may cause ambiguity in specifications. Such phrases require verification (procedural, legal and regulatory) and assignment of responsibility for determining "or equal" products.

2.0 FLUID APPLIED WATERPROOFING

Specifier Note: Paragraph below is an addition to CSI SectionFormat. Retain or delete paragraph below per project requirements and specifier's practice.

A. Manufacturer: Applied Technologies, LLC

1. Contact: P. O. Box 18476 Fairfield, OH 45018 1-877-277-5948 (513) 939-3767 Fax (513) 939-3787

B. Proprietary Products/Systems to be purchased directly from Applied Technologies by Applicator.

C. Fluid-applied Waterproofing and related products including the following:

1. J-Cote WB Waterproofing Membrane:

a. Material: Polymer-modified asphalt

b. Total solids: 60-70%

c. Application Method: [Spray] [Brush] [Roll]

d. Elongation at 70^{0}F (21^{0}C): (ASTM D-412) 779%

e. Total cure time: 24 hours

f. Tensile strength: (ASTM C-719): 36 psi (331 kPa)

g. Weight/gallon: 7.6 lb (3.4 kg)

h. Coverage rate: 3-4 gallon/ 100 ft^2

i. Film thickness, Dry: 40 mils (1.5 mm)

j Color: Black

k. Crack Bridging: (ASTM C-836): 10 cycles without failure

l. Resistance to water flow (ASTM D-466): Bond strength not affected

m. Water solubility (ASTM D2939): No blistering re-emulsification

n. Water vapor (ASTM E-96):

i. Transmission: 0.33 grains/sf/hr

ii. Permeability: 0.79 perms (13 ng/Pa x s x m^2)

2. [FibR-Dri Protection Panel:]

a. Material: Inorganic glass fiber

b. Thermal Resistance: R3.1-R10 ft^2 x h x ^{0}F/BTU(0.5-1.7m^2 x K/W)

c. Foundation drainage rate: Up to 237 gal/hr/ lineal ft)

3. [Dimple-Dri]

a. Material: High Density Polyethylene (HDPE) drainage rolls with attached polypropylene geotextile mat.

b. Foundation drainage rate: Hydraulic Gradient =1: 18 gpm/ ft width (188 lpm/ m width)

c. Dimple Height 0.40"

4. [DrainGuard 400/420]

a. Material: High Density Polyethylene (HDPE) drainage rolls with attached polypropylene geotextile mat.

b. Foundation drainage rate: Hydraulic Gradient =1: 18 gpm/ ft width (188 lpm/m width)

c. Dimple height 0.40"

5. [DrainGuard 700/720]

a. Material: High Density Polyethylene (HDPE) drainage rolls with attached polypropylene geotextile mat.

b. Foundation drainage rate: Hydraulic Gradient =1: 21 gpm/ ft width (188 lpm/m width)

Specifier Note: Edit Article to suit project requirements. If substitutions are permitted, edit text below. Add text to refer to Division 1 Project Requirements (Product Substitution Procedures) Section.

2.02 PRODUCT SUBSTITUTIONS

A. Substitutions: No substitutions permitted

2.03 ACCESSORY MATERIALS

A. Provide proprietary accessory materials, including the following:

Specifier Note: Specify mastic below to patch cracks, voids and holes in the concrete or masonry walls, which are to receive waterproofing. Applied Technologies Mastic's are made of fiberated, trowel grade asphalt-based mastic. These materials adhere to form a strong, flexible bond.

1. Applied Technologies Mastic:
   a. Material: Plastic or resin material compatible with the waterproofing membrane.

PART 3 EXECUTION

Specifier Note: Article below is an addition to the CSI SectionFormat. Revise article below to suit project requirements and specifier's practice.

3.01 MANUFACTURER'S INSTRUCTIONS

A. Comply with the most current written installation instructions and recommendations of the waterproofing manufacturer.

3.02 EXAMINAITON

A. Site Verification of Condition:

1. Verify that conditions are acceptable for application of the waterproofing system.
2. Do not proceed with the application until unacceptable conditions are corrected.

3.03 PREPERATION

A. Surface Preparation

1. Ensure that the surfaces to receive waterproofing are structurally sound and free of moisture, dust, mud, loose mortar, fins, metal projections or any substances that would be detrimental to the bonding of membrane to other surface.
2. Remove wall ties
3. Patch cracks, voids and holes with nonshrink grout or mastic.

Specifier Note: Coordinate article below with manufacturer's recommended application requirements.

3.04 APPLICATION

A. Spray apply a uniform coat of waterproofing to entire wall area. Obtain a seamless membrane free of entrapped gasses, with minimum dry film thickness of 40 mils.
B. Apply fluid membrane onto footing area a minimum of 4" (102 mm) to prevent pooling.
C. Allow membrane to cure for 24 hours before placing any backfilling against the wall.
D. Follow the current installation instructions.

Specifier Note: Delete article below if not applicable to project

3.05 INSULATION/DRAINAGE PANEL INSTALLATION

Specifier Note: Edit, retain or delete paragraphs below to comply with project requirements and Specifier practices.

A. When using FibR-Dri begin installation of panels after membrane has been applied. Place and secure drainage panels to substrate according to manufacturer's current written instructions.
   1. Install panels from top of footing extending to finish grade level. When FibR-Dri is to be stacked maintain a factory equivalent edge at all seams to ensure proper fit and drainage channel alignment.
   2. Secure FibR-Dri to the wall using powder activated mechanical fasteners. Install top fasteners within 4" (102 mm) of the tops of each panel.

B. When using the Drimple-Dri or DrainGuard 400/420/700/720 panel, install after membrane has been applied. Place and secure to substrate according to manufacturer's current written instructions.
   1. Begin installation at a corner. Install horizontally against the waterproofing membrane with the polypropylene geotextile mat outward.
   2. Install panels from top of footing extending to finish grade level. If there is overlapping once you have reached grade height, a utility knife can be used to cut the rolls to the correct height.
   3. For good adherence, apply uniform pressure throughout the surface area, not just the edges and corners.
   4. When two edges come together from two separate pieces, overlap the dimples to create a continuous coverage of the wall.
   5. Secure Dimple-Dri and DrainGuard 400 to the wall with powder activated fasteners.
   6. Install top fasteners within 4" (102 mm) of the top.

C. Protect the installed insulation,drainage panels during subsequent construction.

Specifier Note: Coordinate article below with Division 1 Execution Requirements (Cleaning) Section.

3.06 CLEANING

A. Clean spillage and soiling from adjacent construction using cleaning agents and procedures recommended by manufacturer of affected construction.

CertainTeed

sustainable insulation.

Residential and Commercial Insulation Products

Submittal Form

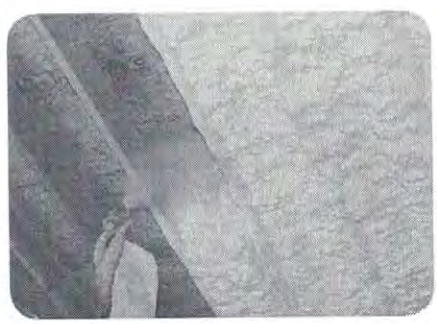

Submitted to: SE DAVIS CONSTRUCTION LLC

Job name: SHA -PRINCE FREDERICK

Submitted by: G & B INSULATION

Date: 06-23-17

This Submittal Form is provided to assist you in specifying and selecting the proper CertainTeed Insulation products. Basic product descriptions and performance data are included. For further information or technical assistance, contact your local CertainTeed representative.

CertainTeed Corporation, 20 Moores Road, Malvern, PA 19355

800-233-8990

Visit our website at: www.certainteed.com/insulation

Customer Service 800-441-9850 • Fax 800-735-2381

CertainTeed's commitment to quality and the environment has ensured the registration of the Athens, Chowchilla and Kansas City plants to ISO 9001:2008 and ISO 14001:2004 standards.

CertainTeed
SAINT-GOBAIN

Product	Description	R-Values and Thicknesses*	Applicable Standards

☑ Unfaced Building Insulation

Sustainable Insulation® manufactured in widths to permit pressure fit installation. Used with a separate vapor retarder or where no vapor retarder is required or recommended.

	R	Nominal Thickness
☐	49	15"
☐	38	12"
☐	38C**	10¼"
☐	30	10"
☐	30C**	8¼"
☐	25	8"
☐	22	6½"

	R	Nominal Thickness
☐	21	5½"
☐	20	5½"
■	19	6¼"
☐	15	3½"
☐	13	3½"
■	11	3½"

**Cathedral Ceiling Batt

Complies with ASTM C665, Type I. Is noncombustible, meeting test criteria of ASTM E136. Thermal performance determined by ASTM C653 and C518.

Notes:
FOR SOUND BATT INSULATION

☐ Kraft Faced Building Insulation

Sustainable Insulation® manufactured with a kraft paper facing with a vapor permeance rating of 1.0 or less. Includes stapling flanges.

	R	Nominal Thickness
☐	49	15"
☐	38	12"
☐	38C**	10¼"
☐	30	10"
☐	30C**	8¼"
☐	25	8"
☐	22	6½"

	R	Nominal Thickness
☐	21	5½"
☐	20	5½"
☐	19	6¼"
☐	15	3½"
☐	13	3½"
☐	11	3½"

**Cathedral Ceiling Batt

Complies with ASTM C665, Type II, Class C, Category 1. Thermal performance determined by ASTM C653 and C518.

Notes:

☐ SpeedyR™ Kraft Faced Building Insulation

Sustainable Insulation® manufactured with a kraft paper facing with a vapor permeance rating of 1.0 or less. No stapling required.

	R	Nominal Thickness
☐	21	5½"
☐	19	6¼"
☐	13	3½"

Complies with ASTM C665, Type II, Class C, Category 1. Thermal performance determined by ASTM C653 and C518.

Notes:

☐ SmartBatt™ Insulation

Sustainable insulation® manufactured with an integrated smart vapor retarder with a permeance rating of 1.0 or less. Includes stapling flanges. Material is Class A fire rated.

	R	Nominal Thickness
☐	38	12"
☐	38	10¼"
☐	30	10"
☐	30	8¼"
☐	21	5½"

	R	Nominal Thickness
☐	19	6¼"
☐	15	3½"
☐	13	3½"
☐	11	3½"

Complies with ASTM C665, Type II, Class A, Category 1. Thermal performance determined by ASTM C518.

Notes:

***Additional R-Values and thicknesses may be available. Contact your CertainTeed representative for more information.**

Product	Description	R-Values and Thicknesses*	Applicable Standards

☐ Basement Wall Insulation

Sustainable Insulation® available with perforated white flame resistant polypropylene or foil facings. Used to insulate walls of unfinished crawlspaces and basements. Flame spread rating is 25 or less. Available in 48" and 72" widths.

	R	Nominal Thickness
☐	11	3⅜"
☐	15	4½"
☐	19	6¼"

Complies with ASTM C665, Type II, Class A, Category 2. Thermal performance determined by ASTM C653 and C518.

Notes:

☐ MemBrain™ Smart Vapor Retarder and Air Barrier Film

Vapor retarder sheeting intended for use with unfaced, vapor permeable mass insulation (fiber glass and mineral wool) in wall and ceiling cavities. MemBrain is a polyamide film that changes its permeability with ambient humidity conditions. Material is Class A fire rated.

	Roll Width	Nominal Thickness
☐	8 ft.	2 mil
☐	9 ft.	2 mil
☐	10 ft.	2 mil
☐	12 ft.	2 mil

Complies with ASTM C665, Type II, Class A, Category 1. Water vapor permeance values are determined by ASTM E96.
≤ 1.0 perm (57 ng/Pa•s•m²) (ASTM E96, Standard Desiccant method)
> 10 perms (570 ng/Pa•s•m²) (ASTM E96, Standard Water method)

Notes:

Sound Attenuation Products	Description	R-Values and Thicknesses*	Applicable Standards

☐ Sound Attenuation Batts

Sustainable Insulation® unfaced batts manufactured in widths to permit pressure fit installation in steel stud systems.

	R	Nominal Thickness
☐	11	3½"
☐	8	2½"

Complies with ASTM C665, Type I. Is noncombustible, meeting test criteria of ASTM E136. Thermal performance determined by ASTM C653 and C518.

Notes:

☐ Acoustical Ceiling Batts

Sustainable Insulation® 24" x 48" batts either unfaced or with tabless kraft paper facing. For use in suspended ceiling systems.

	R	Nominal Thickness
☐	19	6¼"
☐	11	3½"

Complies with ASTM C665, Type I (unfaced), Type II, Class C, Category 1, (faced). Thermal performance determined by ASTM C653 and C518.

Notes:

***Additional R-Values and thicknesses may be available. Contact your CertainTeed representative for more information.**

Commercial Products	Description	R-Values and Thicknesses*	Applicable Standards

☐ CertaPro™ AcoustaTherm™ Batts

Sustainable Insulation® manufactured in widths to permit friction fit installation. Unfaced is used with a separate vapor retarder or where no vapor retarder is required or recommended.

	R	Nominal Thickness
☐	30 (Unfaced)	10"
☐	19 (Unfaced, Kraft-faced no tabs)	6¼"
☐	11 (Unfaced, Kraft-faced no tabs)	3½"
☐	8 (Unfaced)	2½"

Unfaced complies with ASTM C553, Type I, ASTM C665, Type I and is noncombustible, per ASTM E136. Kraft Faced complies with ASTM C665, Type II, Class C, Category 1. Thermal performance determined by ASTM C518.

Notes:

☐ CertaPro™ Partition Batts

Sustainable Insulation® unfaced flexible blanket-type batts for use in commercial construction for acoustical and thermal insulation in shaft and partition walls.

	R	Nominal Thickness
☐	5.8	1½"

Complies with ASTM C553, Type I, II, ASTM C665, Type I and is noncombustible, per ASTM E136.

Notes:

☐ CertaPro™ Thermal Kraft Faced Batts

Sustainable Insulation® manufactured with a flanged kraft paper facing providing a vapor retarder with a perm rating of 1.0 or less.

	R	Nominal Thickness
☐	19	6¼"
☐	11	3½"

Complies with ASTM C553, Type I and ASTM C665, Type II, Class C, Category 1. Thermal performance determined by ASTM C177 or ASTM C518.

Notes:

☐ CertaPro™ Thermal Foil Faced Batts

Sustainable Insulation® manufactured with a flanged foil/kraft vapor retarder providing a perm rating of 0.05 or less. Has a flame spread rating of 75 or less.

	R	Nominal Thickness
☐	38	12"
☐	30	10"
☐	19	6¼"

	R	Nominal Thickness
☐	13	3½"
☐	11	3½"

Complies with ASTM C553, Type I and ASTM C665, Type III, Class B, Category 1. Thermal performance determined by ASTM C177 and ASTM C518.

Notes:

☐ CertaPro™ Thermal FSK-25 Faced Batts

Sustainable Insulation® manufactured with a flanged flame resistant foil-scrim-kraft facing. Used where a flame spread rating of 25 or less is required for insulation facings. The facing has a perm rating of 0.02 or less.

	R	Nominal Thickness
☐	38	12"
☐	30	10"
☐	19	6¼"

	R	Nominal Thickness
☐	13	3½"
☐	11	3½"

Complies with ASTM C553, Type I and ASTM C665, Type III, Class A, Category 1. Thermal performance determined by ASTM C177 or ASTM C518.

Notes:

***Additional R-Values and thicknesses may be available. Contact your CertainTeed representative for more information.**

Product	Description	R-Values and Thicknesses*	Specification Compliance

☐ CertaPro™ Thermal Extended Flange FSK Faced, White PSK Faced Batts

Sustainable Insulation® manufactured with a white flame-resistant poly-scrim-kraft facing (PSK) or flame-resistant foil-scrim-kraft facing (FSK). Used where a flame spread rating of 25 or less is required for insulation facings. All facings have a perm rating of 0.02 or less and a 4" extended flange.

	R	Nominal Thickness
☐	30 (FSK only)	10"
☐	19 (PSK & FSK)	6¼"

PSK and FSK comply with ASTM C553, Type 1. PSK complies with ASTM C665, Type II, Class A, Category 1. FSK complies with ASTM C665, Type III, Class A, Category 1. Thermal performance determined by ASTM C177 and ASTM C518.

Notes:

☐ CertaPro™ Commercial Board

Flexible to rigid boards for residential and commercial construction. Manufactured unfaced, with a reinforced white kraft and foil laminate (ASJ) or an aluminum foil, glass scrim kraft laminate (FSK).

Available in four densities:

CB 150: Light weight, used where flexibility is desired.

CB 225: Semi-rigid board type.

CB 300: Board type with greater rigidity and compressive strength for a smoother more abuse resistant surface.

CB 600: A rigid board product.

	CB 150	
	R-Value	Thickness
☐	16.0	4"
☐	14.0	3½"
☐	12.0	3"
☐	10.0	2½"
☐	8.0	2"
☐	6.0	1½"

	CB 225	
	R-Value	Thickness
☐	16.6	4"
☐	14.6	3½"
☐	12.5	3"
☐	10.4	2½"
☐	8.3	2"
☐	6.3	1½"
☐	4.2	1"

	CB 300	
	R-Value	Thickness
☐	17.4	4"
☐	15.2	3½"
☐	13.0	3"
☐	10.9	2½"
☐	8.7	2"
☐	6.5	1½"
☐	4.3	1"

	CB 600	
	R-Value	Thickness
☐	9.1	2"
☐	6.8	1½"
☐	4.5	1"

Product	ASTM C612	ASTM C553
CB 150	Type IA	Types I, II & III
CB 225	Type IA	—
CB 300	Types IA & IB	—
CB 600	Types IA & IB	—

ASTM C1136 (Facing only) Type II: FSK; Type I: ASJ

Notes:

☐ CertaPro™ AcoustaBoard™ Black†

Rigid or semi-rigid fiber glass board with a black mat facing for acoustical applications in sound studios or other acoustically sensitive applications requiring a black exposed surface.

Available in two densities:

Semi-rigid board type.

Board type with greater rigidity and compressive strength for a smoother more abuse resistant surface.

	Type 225	
	R-Value	Thickness
☐	8.7	2"
☐	6.5	1½"
☐	4.3	1"

	Type 300	
	R-Value	Thickness
☐	8.7	2"
☐	6.5	1½"
☐	4.3	1"

Product	ASTM C612
Type 225	Type IA
Type 300	Types IA & IB

Notes:

† Indicates Sustainable Insulation product may not be available in all areas.

***Additional R-Values and thicknesses may be available. Contact your CertainTeed representative for more information.**

Product	Description	R-Values and Thicknesses*	Specification Compliance

☐ **CertaPro™ AcoustaBlanket™ Black†**

1/2" to 2" thick black fiber glass blanket with a durable fire-resistant black composite surface used for acoustical control applications in theaters, sound studios or other acoustically sensitive applications requiring a black exposed surface.

	Type 150
	Thickness
☐	1"
☐	1½"
☐	2"

	Type 200
	Thickness
☐	½"

Complies with ASTM C553, Type I and II. Acoustical performance determined by ASTM C423 using Type A mounting. Thermal resistance determined by ASTM C177 or C518.

Notes:

☐ **Metal Building Insulation 202-96†**

A flexible blanket insulation furnished in rolls and intended to be laminated on one side with a suitable vapor retarder. It is used as a thermal and acoustical insulation in the roofs and sidewalls of pre-engineered metal buildings and post frame construction. Plain unfaced, Metal Building Insulation 202-96 may be used as an additional layer of insulation over laminated metal building insulation in systems or over the top of BUR or single ply roofs in metal reroof applications to achieve greater thermal performance.

	R	Nominal Thickness	Widths	Lengths
☐	30	9¼"	36", 48", 60", 72"	25'
☐	25	8"	36", 48", 60", 72"	30'
☐	21	6¾"	36", 48", 60", 72"	45'
☐	19	6⅜"	36", 48", 60", 72"	50'
☐	16	5½"	36", 48", 60", 72"	50'
☐	13	4⅜"	36", 48", 60", 72"	75'
☐	11	3¾"	36", 48", 60", 72"	100'
☐	10	3⅜"	36", 48", 60", 72"	100'

Metal Building Insulation 202-96 has physical properties that regularly meet the requirements of the following specifications:

ASTM C991, Type I Plain and NAIMA 202-96. (Rev. 2000)

Notes:

Premium Blowing Wool Products	Description	R-Values and Thicknesses*	Applicable Standards

☐ **InsulSafe® SP**

Fiber glass blowing insulation for pneumatic application in open attics or closed cavities.

OPEN ATTIC APPLICATION			
R-Values*	Bags per 1,000 sq. ft.	Minimum Weight Pounds per sq. ft.	Min. Installed/ Settled Thickness
60	28.9	0.897	21.75"
49	23.5	0.727	18.25"
44	20.8	0.646	16.50"
38	17.9	0.556	14.50"
30	13.8	0.427	11.50"
26	11.8	0.366	10.00"
22	9.9	0.306	8.50"
19	8.6	0.267	7.50"
13	5.9	0.182	5.25"
11	5.0	0.155	4.50"

Complies with ASTM C764, Type I. Thermal performance is determined by ASTM C687 and ASTM C518. Is noncombustible, meeting criteria of ASTM E136.

Notes:

† **Indicates Sustainable Insulation product may not be available in all areas**

***Additional R-Values and thicknesses may be available. Contact your CertainTeed representative for more information.**

Premium Blowing Wool Products

Description	R-Values and Thicknesses*	Applicable Standards

☐ **OPTIMA® System**

System including OPTIMA premium fiber glass blowing insulation and OPTIMA non-woven fabric or equivalent.

R-Values* 3.50" (2x4) ($hr \cdot ft^2 \cdot °f$)/btu	Bags / 1,000 ft^2	Minimum Weight (lbs / ft^2)	Max Coverage (Net ft^2)	Installed Density (lbs / ft^3)
15	14.1	0.438	70.9	1.5
24	26.6	0.825	37.6	1.8
31	31.2	0.967	32.1	1.6
40	44.8	1.388	22.3	1.8
48	48.4	1.500	20.7	1.6
56	39.8	1.233	25.1	1.6

Complies with ASTM C764, Type I. Thermal performance is determined by ASTM C687 and ASTM C518. Is noncombustible, meeting criteria of ASTM E136.

Notes:

Spray Foam Products

Description	R-Values and Thicknesses*

☐ **CertaSpray® Open Cell Foam**

A two-component blown spray polyurethane foam applied as a spray insulation. The foam provides thermal insulation for the interior of buildings and reduces air infiltration through the building envelope.

R	Thickness in	R	Thickness in	R	Thickness in	R	Thickness in	R	Thickness in
3.7	1	11	3	19	5	30	8	45	12
5.6	1.5	13	3.5	21	5.5	34	9		
7.4	2	15	4	23	6	38	10		
9.3	2.5	17	4.5	26	7	41	11		

Notes:

☐ **CertaSpray® Closed Cell Foam**

A two-component blown spray polyurethane foam applied as a spray insulation. The foam provides thermal insulation for the interior of buildings and reduces air infiltration through the building envelope.

R	Thickness in	R	Thickness in	R	Thickness in	R	Thickness in	R	Thickness in
6.5	1	20	3	27	4	40	6	76	11.5
9.8	1.5	21	3.1	30	4.5	50	7.5	80	12
13	2	22	3.25	33	5	56	8.5		
17	2.5	23	3.5	37	5.5	66	10		

Complies with ASTM C1029 Type II

Notes:

☐ **CertaSpray®X Open Cell Foam**

A two-component blown spray polyurethane foam applied as spray insulation that has a built-in ignition barrier that passes the AC-377 fire test.

R	Thickness in	R	Thickness in	R	Thickness in	R	Thickness in	R	Thickness in
3.6	1	11	3	18	5	29	8	43	12
5.4	1.5	13	3.5	20	5.5	32	9		
7.2	2	14	4	21	6	36	10		
9	2.5	16	4.5	25	7	39	11		

Notes:

Product Characteristics

Sound Transmission Loss

CertainTeed's Fiber Glass products can reduce sound transmission when properly installed in construction assemblies and can add from 3 to 12 points to the STC rating depending on the type of assembly. The actual rating is dependent on the workmanship, mass of total material, thickness of insulation and the air tightness of the construction. In wood stud assemblies, separation of the wall surfaces plus the addition of insulation in stud cavities are the most effective means of reducing sound transmission. This may be accomplished by installing resilient channels on one side of the partition, or with staggered or double wall constructions. The table on the following page lists some typical sound rated partition assemblies.

***Additional R-Values and thicknesses may be available. Contact your CertainTeed representative for more information.**

Product Characteristics (continued)

Surface Burning Characteristics

These products have the following maximum flame spread and smoke developed ratings when tested per ASTM E84:

Product	Flame Spread	Smoke Developed
Unfaced Building Insulation	5	0
UltraTherm®	5	0
InsulSafe® SP	5	5
OPTIMA®	5	5
FSK-25 Building Insulation	25	50
Basement Wall Insulation	25	50
Standard Foil Faced Building Insulation	75	150
MemBrain™	20	55
SmartBatt™	25	50
CertaSpray® Open Cell Foam	<25	<450
CertaSpray® Closed Cell Foam	<25	<450
CertaSpray® X Open Cell Foam	<25	<450

FSK-25, Basement Wall and standard foil-faced insulation products have a critical radiant flux flame propagation resistance equal to or greater than 0.12 w/cm².

Fire Safety

CertainTeed Unfaced Fiber Glass Building Insulation, OPTIMA®, InsulSafe® SP, and UltraTherm® are noncombustible per ASTM E136 test criteria.

Many building codes require that foam plastic insulation be covered with an approved 15-minute thermal barrier. Consult local building code officials to ensure the application meets local building codes and regulations.

Approximate STC Ratings

Wood Frame Partitions With Gypsum Wallboard Facings (1/2" & 5/8")	No Insulation		3½" of CertainTeed Fiber Glass Insulation (batts or blown)	
	½"	⅝"	½"	⅝"
Single studs/single layer facings	34	35	39	38
Single studs/resilient channel	39	40	46	50
Staggered studs/single layer facings	39	43	50	51
Double stud walls/single layer facings	46	45	57	57

Steel Stud Partitions With Gypsum Wallboard Facings (1/2" & 5/8")	No Insulation				3½" of CertainTeed Fiber Glass Insulation (batts or blown)			
	16" O.C. 2½" Studs		24" O.C. 3⅝" Studs		16" O.C. 2½" Studs		24" O.C. 3⅝" Studs	
	½"	⅝"	½"	⅝"	½"	⅝"	½"	⅝"
Single layer facings	36	39	36	39	45	47	48	50
Double layer one side, single layer other side	39	44	42	47	51	52	52	55
Double layer each side	45	48	50	52	55	57	55	58

Guide Specifications for CertainTeed Fiber Glass Thermal and Acoustical Insulations

Note to the specifier: Provide information as required; delete inappropriate items and fill in where indicated.

This guide specification applies to thermal and acoustical insulation in walls, ceilings and floors. It follows Construction Specifications Institute (CSI) format.

PART 1 – GENERAL

1.01 Work included
State type of insulation and where it is to be installed.

1.02 Related Work
State if separate vapor retarder and/or air barrier is to be installed.

1.03 References
Include appropriate insulation standards.

PART 2 – PRODUCTS

2.01 Acceptable Manufacturers
CertainTeed Corporation

2.02 Materials

Thermal Insulation

Insulation for (ceilings) (walls) (floors) shall be CertainTeed _____ _____ inches thick, with R-Value of _____, or Insulation for (ceilings) (or other approved location) shall be CertainTeed _____ installed at minimum of _____ inches thick, with _____ bags/1,000 sq. ft. for R-Value of _____.

Sound Control Insulation

Insulation for (ceilings) (walls) (floors) shall be CertainTeed _____.

Acoustical Ceiling Batts

Insulation over suspended ceilings shall be CertainTeed kraft-faced (3½" R-11) (6¼" R-19) Acoustical Ceiling Batts.

PART 3 – EXECUTION

3.01 Preparation
Verify that mechanical and electrical services in (ceilings) (walls) (floors) have been installed and tested and, if appropriate, verify that adjacent materials are dry and ready to receive insulation.

3.02 Installation
Installation shall be in accordance with CertainTeed's instructions.

Guide Specifications for CertainTeed Commercial Fiber Glass Insulation Products

PART 1 – GENERAL

1.01 Summary

A. This section includes commercial building thermal/acoustical insulation for application to:

1. Exterior building walls;
2. Interior partition walls, shaft walls, and other interior surfaces;
3. Ceiling suspension systems.

1.02 Submittals

A. Prepare and submit for approval information as required by the conditions of the contract and Division 1 Submittals sections.

B. Submit product data for each thermal and acoustical insulation product specified.

1.03 Quality Assurance

A. Installers shall be qualified to perform work of this section and shall be experienced in the performance of installation operations as appropriate to the project.

1.04 Delivery and Storage

A. Deliver all insulation materials and accessories to the project site in manufacturer's original, unopened, undamaged packaging, with all identification labels intact. Store in a safe place protected from dust, dirt, moisture and physical abuse before and during installation.

PART 2 – PRODUCTS

2.01 Approved Manufacturer and Products

A. All thermal/acoustical insulation materials shall be in accordance with Division 1 Submittals, manufactured by CertainTeed Corporation, including but not limited to:

1. CertaPro AcoustaTherm Batts, Unfaced or Kraft Faced (no tabs).
2. CertaPro Partition Batts, Unfaced.
3. CertaPro Thermal Kraft Faced Batts.
4. CertaPro Thermal Foil Faced Batts.
5. CertaPro Thermal FSK-25 Faced Batts.
6. CertaPro Thermal Extended Flange Batts, FSK Faced.
7. CertaPro Thermal Extended Flange Batts, Black PSK Faced.
8. CertaPro Thermal Extended Flange Batts, White PSK Faced.
9. Building Insulation, Unfaced, Kraft Faced.
10. CertaPro Commercial Board, Unfaced, FSK Faced, ASJ Faced.
11. CertaPro AcoustaBoard Black.
12. CertaPro AcoustaBlanket Black.
13. Metal Building Insulation 202-96 (Rev. 2000).
14. Commercial Blanket Insulation.

B. Where applicable, specify product thicknesses and length/width dimensions so insulation completely fills wall cavities to meet thermal and acoustical performance specifications.

C. Specify type of vapor retarder facing to meet water vapor transmission and fire rating specifications.

2.01 Products and Applications

A. Curtain Wall Insulation:

1. CertaPro AcoustaTherm Batts, Unfaced or Kraft Faced (no tabs).
   R-Value: _____.
2. CertaPro Thermal Kraft, Foil, or FSK-25 Faced Batts.
   R-Value: _____.
3. CertaPro Commercial Board, Unfaced, FSK or ASJ Faced.
   R-Value: _____.

B. Partition Insulation:

1. CertaPro Partition Batts, Unfaced.
   R-Value: 5.8.

C. Interior Cavity Wall Insulation:

1. CertaPro AcoustaTherm Batts, Unfaced or Kraft Faced.
   R-Value: _____.
2. CertaPro Thermal Batts, Kraft, Foil, or FSK-25 Faced.
   R-Value: _____.
3. CertaPro Thermal Extended Flange Batts, FSK or PSK Faced.
   R-Value: _____.

D. Insulation over ceiling suspension systems:

1. CertaPro AcoustaTherm Batts, Unfaced or Kraft Faced (no tabs).
   R-Value: _____.

E. Insulation for acoustic control in theaters, sound studios, etc.:

1. CertaPro AcoustaBoard Black.
   R-Value: _____.
2. CertaPro AcoustaBlanket Black.
   R-Value: _____.

F. Insulation for metal building ceiling and side wall applications:

1. CertainTeed Metal Building 202-96 (Rev. 2000).
   R-Value: _____.
2. Commercial Blanket Insulation.
   R-Value: _____.

PART 3 – EXECUTION

3.01 Inspection

A. Verify that all insulation may be installed in accordance with project drawings, thermal and acoustical design requirements and fire ratings.

B. Confirm that all exterior and interior wall, partition, and floor/ceiling assembly construction has been completed to the point where the insulation may be correctly installed.

3.02 Installation

B. Install all insulation in compliance with manufacturer's published instructions and good workmanship so that acoustical and thermal performance requirements are met.

3.03 Safety Precautions

A. Properly protect insulation contractor's employees during installation of all insulation. Protection shall include proper attire when handling and applying insulation materials, and shall include but not be limited to gloves, hard hats, disposable dust respirators, and eye protection.

B. Conduct all job site operations in compliance with applicable provisions of the Occupational Safety and Health Act and/or local safety and health codes and regulations.

A.2

24 September 2018

Orndorff & Spaid Inc.
11722 Old Baltimore Pike
Beltsville, MD 20705

Firestone
Firestone Building
Products Company, LLC
200 4th Avenue South
Nashville, TN 37201

Project: Prince Frederick SHA Facility

To Whom It May Concern:

Firestone Building Products is pleased to inform you that the roofing system listed below has been reviewed and is eligible for the **20-Year Firestone Red Shield Warranty**:

Firestone Fully Adhered Roofing System:

Construction:	New Construction
Deck:	22-ga Steel
Slope:	None
Thermal Barrier:	DensDeck Prime, 5/8", 4'x8' Boards
Attachment:	Common-Fastened
Insulation (1st layer):	Firestone ISO 95+, 3.50", 4'x8' boards
Attachment:	Common-fastened
Insulation (2nd layer):	Firestone Tapered ISO 95+, ½":12 Slope, 4'x4' boards
Attachment:	Common-fastened
Coverboard:	DensDeck Prime, 5/8", 4'x8' boards
Attachment:	Firestone Heavy Duty Fasteners and Insulation Plates
Rate:	Field/8 fasteners per board; Perimeter/8 fasteners per board; Corners/8 fasteners per board
Membrane:	.060 Firestone UltraPly TPO
Attachment:	Firestone Single Ply LVOC Bonding Adhesive

Note:

- ASTM D 3746 is a test for Bituminous Roofing, and does not apply to TPO.
- ASTM D 4272 is a dart drop test for films and does not apply to TPO.

PERFORMANCE REQUIREMENTS
Performance standards and construction requirements regarding wind uplift and fire resistance are established by the agencies indicated in the construction specification. These agencies' construction requirements are subject to change; please consult the appropriate agencies for full information regarding compliance with their current standards and requirements.

This Firestone Roofing System meets the following Performance Requirements as specified by the project roof designer, architect, or engineer:

- System Meets 90 PSF of uplift resistance when fastened at 8 per board in the field/Perimeter/Corner.
- UL-A (resistance to severe fire).
- Cool Roof Rating Council (CRRC) Initial Reflectance, Initial / 3 Year: 0.79 / 0.68
- Cool Roof Rating Council (CRRC) Thermal Emittance, Initial / 3 Year: 0.85 / 0.83
- Meets ASTM G 155

FM Global references ASCE 7 (in Property Loss Prevention Data Sheet FM 1-29) for uplift pressures in the field of the roof as they pertain to wind speed in a given geographic area, and ground roughness, according to the height of the building and an assigned Importance Factor. The information that is provided to Firestone by the design professional is then used to determine the appropriate assembly, based on the uplift requirements. Firestone assumes absolutely no liability for calculations provided to Firestone, and all uplift pressures should be verified by a design or engineering professional prior to new installation to determine the appropriate assembly.

DEFINITION OF PERIMETER AND CORNER AREAS
Following *ANSI/SPRI* guidelines, the perimeter area is defined as the outer boundary of the roof with a width equal to 40% of the building height or 10% of the building width, whichever is less, but not less than 6 feet (1.8 m). The perimeter area may be enlarged depending upon the building configuration. The corner area is defined as the portion of the perimeter area beginning at the intersection of two roof edges and proceeding in both directions a distance equal to the width of the perimeter area. Corner areas on buildings with minimum 3 feet high continuous parapet walls and a maximum 2 inch in 12-inch roof slope can be treated as perimeter areas. For buildings insured by FM Global, please consult *FM Global Data Sheet 1-29* for specific information.

WARRANTY REQUIREMENTS
1. The Applicator must submit a Pre-Installation Notice (PIN) to Firestone, and must include an Approved Roof Drawing (ARD) with their PIN.
2. The roofing system must be installed by a licensed Firestone Red Shield Applicator, and installed in accordance with all current Firestone technical standards, warranty requirements, and detail drawings.
3. The roofing system installation must successfully pass an on-site audit by a Quality Building Services (QBS) Technical Representative, upon substantial completion.

PLEASE NOTE
Firestone does not engage in the practice of architecture or engineering; the Firestone review referenced in this letter is for warranty eligibility purposes. Firestone technical standards are subject to change; Please visit, http://firestonebpco.com/technical-information/, for the most current information regarding Firestone roofing system design guidelines, detail drawings, and product information. The information in this letter expires twelve (12) months after the date shown.

Please feel free to contact me with any questions, and thank you for choosing Firestone.

Regards,

FIRESTONE BUILDING PRODUCTS COMPANY, LLC

Gary Urban
Building Systems Advisor, Mid-Atlantic
Firestone Technical Services
615-937-4818
UrbanGary@bfusa.com

Firestone BUILDING PRODUCTS

UltraPly™ TPO Membrane
Fully Adhered, Steel Deck

5, 10, 15, 20 Year Red Shield™ Warranty

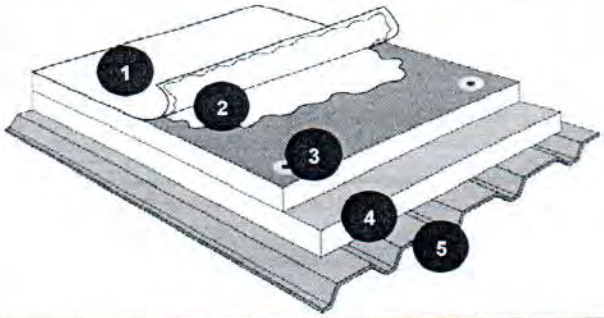

1. Firestone UltraPly™ TPO Membrane
2. Fully Adhered with Bonding Adhesive
3. Mechanically Attached or Adhered Cover Board (Optional)
4. Mechanically Attached or Adhered Insulation
5. Steel Deck

Consult Firestone Technical Specifications, Guides and Details at www.firestonebpco.com

Slope Requirement
Positive slope required for warranty.[5]

Construction Type
New construction, complete tear-off, or recover with any wet or damaged materials removed prior to installation.

Building Height Limitation
Firestone UltraPly™ TPO Adhered Systems are limited to buildings 250' (76.2 m) or less.

Use of Air Barrier
An air barrier is required for projects with large wall openings greater than 10% of the total wall area.

Base Tie-Ins
Must be attached to substrates which provide a minimum of 200 lbf (1 kN) in any direction.

Increased Wind Speed and Codes
Any wind speed coverage exceeding 55 mph (88 km/h) or projects with codes requirements must be reviewed by a Firestone Roof Systems Advisor.

Deck Requirement
❑ Minimum 22 Gauge Steel

Fastener Type
❑ Firestone All Purpose Fastener *(Max. 15 Year Warranty)*
❑ Firestone Heavy Duty Fastener
❑ Firestone Heavy Duty Plus Fastener
❑ Firestone HailGard™ Fastener *(with HailGard Composite Board or OSB only)*

Insulation Adhesive*
❑ Firestone I.S.O. Twin Pack™ Insulation Adhesive
❑ Firestone I.S.O.Spray™ S Insulation Adhesive
❑ Firestone I.S.O. Fix™ II Insulation Adhesive
❑ Firestone I.S.O.Stick™ Insulation Adhesive

*NOTE: Max. 4' x 4' boards must be used when attaching insulation with adhesives. For direct attachment to steel deck, 6" O.C. bead spacing must be used. Cleaning of the metal deck may be required to remove processing oils from manufacturing.

Adhesive Attachment
Max. 15 Year Warranty:
❑ Bead Spacing: F: 12", P: 12", C: 12"
20 Year Warranty:
❑ Bead Spacing: F: 12", P: 6", C: 4"
❑ Full Application *(I.S.O.Spray S Insulation Adhesive)*

Membrane Requirement
❑ UltraPly TPO, Any Thickness

Seaming Requirement
Firestone 1.5" Single Weld System (use robot welder). Joint covers are required at all joints and at angle changes 1:12 or greater.

Firestone Membrane Adhesive
❑ UltraPly Bonding Adhesive
❑ Single-Ply LVOC Bonding Adhesive
❑ Single-Ply LVOC Bonding Adhesive 1168
❑ Water Based Bonding Adhesive (P) *(Max. 15 Year Warranty)*

Edge Metal System
❑ Firestone EdgeGard™ System
❑ Firestone AnchorGard™ System
❑ Firestone Coping System
❑ Firestone Termination Bar
❑ Firestone Aluminum Drain Bar

Insulation Fastener and Insulation Plate Attachment Rates – Field Rates for Standard 55 mph Wind Speed

Insulation (Top Layer)	4' x 8'	Coverboard (Optional)	4' x 8'
1.0" to 1.4" Firestone ISO 95+™ GL or RESISTA™ Insulation	16	½" or 1.0" FiberTop Wood Fiber Board (*Max. 15 Year Warranty*)	16
1.5" to 1.9" Firestone ISO 95+ GL or RESISTA Insulation	12	Firestone ISOGARD™ HD Cover Board	12
2.0" to 4.0" Firestone ISO 95+ GL or RESISTA Insulation	8	¼" SECUROCK® Gypsum-Fiber or DensDeck® I (Prime)	16 16/(12)
Firestone HailGard™ Composite Board	16	½" SECUROCK Gypsum-Fiber or DensDeck I (Prime)	12 12/(10)
Firestone ISOGARD™ HD Composite Board	8	⅝" SECUROCK Gypsum-Fiber or DensDeck I (Prime)	8 8/(8)

Detail Description

Wall Terminations:	Firestone Termination Bar with AP Sealant applied along the caulk lip. Surface mounted or inserted counter flashing may also be used in accordance with current Firestone details.
Curb & Wall Flashings:	Curbs, walls, and expansion joints must be anchored with appropriate base tie-in detail, either using seam plates and fasteners or using UltraPly QuickSeam Reinforced Perimeter Fastening (RPF) Strip and Batten Strip or 2" Metal Seam Plates. Curbs and walls must be flashed using minimum 0.045" UltraPly TPO Membrane or UltraPly TPO 18" Curb Flashing. Flashings may be sealed with welded details or QuickSeam products when acceptable. Details may include UltraPly TPO Coated Metal.
Corners:	UltraPly TPO Inside/Outside Corners or UltraPly QuickSeam Corner Flashing.
Roof Edges/Parapets:	Firestone AnchorGard™ or EdgeGard™ Fascia or Drain Bar systems. ANSI/SPRI ES-1 rated edge metal may also be used / Firestone Coping System or UltraPly TPO Coated Metal
Penetrations:	Flash with UltraPly QuickSeam or UltraPly Pipe Flashing (weldable), UltraPly TPO Penetration Pocket, or field fabricate with UltraPly TPO Unsupported Flashing.

NOTES:
1. *Only Firestone brand products are covered in a Red Shield warranty.*
2. *Refer to the Firestone Technical Database at www.firestonebpco.com for additional information regarding UltraPly TPO Roof Systems.*
3. *Refer to the Firestone RoofGenuity™ tool to create roof assemblies with high-performance Firestone products at www.RoofGenuity.com.*
4. *DensDeck is a registered trademark of Georgia-Pacific Gypsum LLC.*
5. *It is the installing contractor's responsibility to follow applicable building codes.*
6. *SECUROCK is a registered trademark of USG Corporation..*

QS-TPO-206

Firestone Building Products Company, LLC
250 West 96th Street • Indianapolis, IN 46260
Technical: 1-800-428-4511 • Sales: 1-800-428-4442 • www.firestonebpco.com

Rev. 11/7/2016

Firestone BUILDING PRODUCTS

UltraPly™ TPO Membrane

Item Description
1 Roll

Item Number
Various

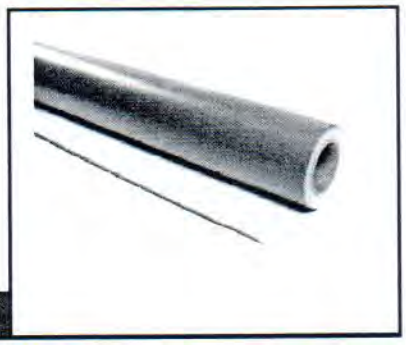

Meets or exceeds ASTM D 6878.

Product Information

Description:

Firestone UltraPly TPO is a flexible Thermoplastic Polyolefin roofing membrane that is produced with polyester weft-inserted reinforcement. UltraPly TPO membrane meets or exceeds all requirements for ASTM D 6878 Specification. This heat weldable TPO membrane is available in 45 mil (1.14 mm) and 60 mil (1.52 mm) thicknesses. This reflective membrane is suitable for a variety of low-slope applications.

Method of Application:

1. Substrates must be clean, dry, smooth, and free of sharp edges, fins, loose or foreign materials, oil, grease, and other materials that may damage the membrane.
2. All roughened surfaces that can damage the membrane shall be repaired as specified to offer a smooth substrate.
3. All surface voids greater than ¼" (6.3 mm) wide shall be properly filled with an acceptable fill material.
4. Firestone UltraPly TPO membrane is installed as continuous roofing or waterproofing layer on the roof. Rolls are overlapped (side laps and end laps) prior to the heat welding of the seam areas.
5. Install the UltraPly TPO Roofing System in accordance with current Firestone UltraPly TPO specifications, details and workmanship requirements.

Storage:

- Store away from sources of punctures and physical damage.
- Assure that structural decking will support the loads incurred by material when stored on rooftop. The deck load limitations should be specified by the project designer.
- Store away from ignition sources as membrane will burn when exposed to open flame.

Precautions:

- Refer to Safety Data Sheets (SDS) for safety information.
- Exercise caution when lifting, moving, transporting, storing or handling membrane rolls to avoid sources of punctures and possible physical damage.
- Contact your Building Systems Advisor at 1-800-428-4511 for specific recommendations regarding chemical or waste product compatibility with Firestone UltraPly TPO Membrane.

LEED® Information:

Post Consumer Recycled Content:	0%
Pre Consumer Recycled Content:	15%
Manufacturing Location:	Wellford, SC Tuscumbia, AL

NOTE: LEED® is a registered trademark of the U.S. Green Building Council.

FM APPROVED

MIAMI-DADE COUNTY APPROVED

CLASSIFIED UL US

ICC-ES
ESR-2831

CCMC 13348-R

UltraPly™ TPO Membrane

Typical Properties (Meets or exceeds ASTM D 6878 Specification)				
Property	**ASTM Standard**	**Performance Minimum**	**Typical Performance 45 mil**	**Typical Performance 60 mil**
Overall Thickness:	D 751	0.039" (1 mm)	0.045" (1.14 mm) ± 10%	0.060" (1.52 mm) ± 10%
Coating over Scrim:	D 7635	0.015" (0.38 mm)	0.017" (0.43 mm)	0.021" (0.53 mm)
Breaking Strength:	D 751, Grab Method	220 lbf (979 N)	340 lbf (1,512 N)	390 lbf (1,735 N)
Elongation of Reinforcement Break:	D 751, Grab Method	15%	25%	25%
Tearing Strength:	D 751	55 lbf (245 N)	120 lbf (534 N)	120 lbf (534 N)
Brittleness Point:	D 2137	-40 °F (-40 °C)	Pass	Pass
Ozone Resistance, No Cracks:	D 1149	Pass (No Cracks)	Pass	Pass
Properties After Heat Aging (Retained Values) (ASTM D 573-5376 h (224 days or 32 weeks) at 240 °F (116 °C)):				
Breaking Strength:	D 751, Grab Method	90% Minimum	> 90%	> 90%
Elongation at Break:	D 751, Grab Method	90% Minimum	> 90%	> 90%
Tearing Strength:	D 751	60% Minimum	> 60%	> 60%
Weight of Change:		± 1% Maximum	< 1%	< 1%
Linear Dimension Change:	D 1204, 6 h at 158 °F (70 °C)	± 1% Maximum	< 1%	< 1%
Water Absorption:	D 471	± 3% Maximum	< 3%	< 3%
Weather Resistance, 80 °C Black Panel, no cracking, crazing when wrapped around a 3" mandrel and inspected at 7X magnification:	G 155	10,080 kJ/m² Minimum	> 60,000 kJ/m²	> 60,000 kJ/m²
Puncture Resistance:	FTM 101C, Method 2031	---	265 (1,180)	300 (1,300)
Dynamic Puncture Resistance MD:	D 5635	---	Pass (20 J)	Pass (40 J)
Dynamic Puncture Resistance CD:	D 5635	---	Pass (35 J)	Pass (50 J)
Static Puncture Resistance:	D 5602	---	Pass (25 kg)	Pass (25 kg)
Air Permeance (Material):	E 2178*	< 0.004 ft³/ft² (0.02 L/(s*m²)	Pass	Pass

**The ASTM 2178 values listed are for the air permeance of the UltraPly TPO Membrane component only. For use of the product as a component in an air barrier assembly, please consult your Firestone Building Systems Advisor (BSA), Code Agency or Authority having Jurisdiction (AHJ) for the acceptable air barrier assembly details.*

UltraPly™ TPO Membrane

Product Sizes

Membrane Thickness: 0.045" (1.14 mm) **Membrane Weight:** 0.23 lb/ft² (1.1 kg/m²)			**Membrane Thickness:** 0.060" (1.52 mm) **Membrane Weight:** 0.31 lb/ft² (1.5 kg/m²)		
Available Sizes		**Available Colors**	**Available Sizes**		**Available Colors**
5' x 100'	(1.5 x 30.5 m)	White, Tan, Gray	5' x 100'	(1.5 x 30.5 m)	White, Tan, Gray
5' x 200'	(1.5 x 61 m)	White	5' x 200'	(1.5 x 61 m)	White
6' 2" x 100'	(1.9 x 30.5 m)	White, Tan, Gray	6' 2" x 100'	(1.9 x 30.5 m)	White, Tan, Gray
8' x 100'	(2.4 x 30.5 m)	White, Tan, Gray	8' x 100'	(2.4 x 30.5 m)	White, Tan, Gray
8' x 200'	(2.4 x 61 m)	White	8' x 200'	(2.4 x 61 m)	White
10' x 100'	(3.0 x 30.5 m)	White, Tan, Gray	10' x 100'	(3.0 x 30.5 m)	White, Tan, Gray
10' x 200'	(3.0 x 61 m)	White	10' x 200'	(3.0 x 61 m)	White
12' 4" x 100'	(3.8 x 30.5 m)	White, Tan, Gray	12' 4" x 100'	(3.8 x 30.5 m)	White, Tan, Gray
12' 4" x 200'	(3.8 x 61 m)	White	12' 4" x 200'	(3.8 x 61 m)	White

Radiative Properties

Cool Roof Rating Council (CRRC): Initial / 3 yr	**White**	**Tan**	**Gray**
Solar Reflectance	0.79 / 0.68	0.61 / 0.55	0.34 / 0.34
Thermal Emittance	0.85 / 0.83	0.81 / 0.84	0.89 / 0.88
Solar Reflectance Index (SRI)	98 / 81	71 / 63	37 / 36
Rated Product ID	0008	0015	0032
Licensed Manufacturer ID	0608	0608	0608
Classification	Production Line	Production Line	Production Line
ENERGY STAR®: Initial / 3 yr	**White**	---	---
Solar Reflectance	0.79 / 0.78*		
Thermal Emittance	0.85		
* White membrane sample cleaned prior to age test.			
LEED®	**White**	**Tan**	**Gray**
Solar Reflectance – ASTM E 903	0.81	0.63	0.37
Thermal Emittance – ASTM E 408	0.95	0.95	0.95
Solar Reflectance Index (SRI) – ASTM E 1980	102	77	43

CRRC COOL ROOF RATING COUNCIL CHARTER MEMBER

ENERGY STAR

ENERGY STAR is only valid in the United States

Firestone GREEN ONE TEAM. ONE PLANET

Please contact Quality Building Services Technical Department at 1-800-428-4511 for further information.

This sheet is meant to highlight Firestone products and specifications and is subject to change without notice. Firestone takes responsibility for furnishing quality materials which meet published Firestone product specifications. Neither Firestone nor its representatives practice architecture. Firestone offers no opinion on and expressly disclaims any responsibility for the soundness of any structure. Firestone accepts no liability for structural failure or resultant damages. Consult a competent structural engineer prior to installation if the structural soundness or structural ability to properly support a planned installation is in question. No Firestone representative is authorized to vary this disclaimer.

Firestone BUILDING PRODUCTS

Single-Ply LVOC Bonding Adhesive

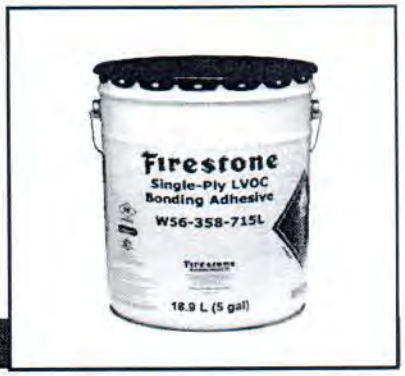

Item Description
5 gal Pail

Item Number
W56358715L

Product Information

Description:

Firestone Single-Ply LVOC Bonding Adhesive is a bonding adhesive designed for bonding RubberGard™ EPDM or UltraPly™ TPO membranes and flashings to wood, metal, masonry and other acceptable substrates.

Method of Application:

1. Surfaces to receive Firestone Single-Ply LVOC Bonding Adhesive must be clean, smooth, dry, and free of sharp edges, loose and foreign materials, oil, grease, and other contaminants. Sweep the mating surface of the membrane with a stiff broom to remove excess dusting agent, if present, and remove other contaminants from the mating surface. **Substrate and ambient temperatures shall exceed 20 °F (-6.7 °C) and rising before applying Single-Ply LVOC Bonding Adhesive.**
2. Stir the adhesive thoroughly before and during use, achieving a uniform mix with no sediment on the bottom and no marbling evident.
3. Apply adhesive at about the same time to both the membrane and the substrate to allow approximately the same flash-off time.
4. Apply by rolling the adhesive evenly on mating surfaces, avoiding globs or puddles.
5. As an option, spray on adhesive and then roll out uniformly and evenly with a solvent-resistant paint roller. **Care must be taken not to apply Firestone Single-Ply LVOC Bonding Adhesive over any area that is to be later cleaned and spliced to another sheet or flashing.**
6. Allow adhesive to flash-off until tacky. Touch the adhesive surface with a clean, dry finger to be certain that the adhesive does not stick or string. Push down and forward on the adhesive at an angle to ensure that the adhesive is ready throughout its thickness. If either motion exposes wet or stringy adhesive when the finger is lifted, then it is not ready for mating. Flash-off time may vary significantly depending on ambient air conditions.
7. Starting at the fold, roll the adhesive coated portion of the sheet into the adhesive coated substrate slowly and evenly so as to minimize wrinkles. To ensure mating of the membrane to substrate, broom the top of the mated membrane with a stiff push broom immediately after mating membrane to substrate.

Storage:

- Store in original unopened containers at temperatures between 60 °F (15.6 °C) and 80 °F (26.7 °C) until ready for use. Product must be used within four hours of transport to the roof. Return unused material to warm storage for a minimum of 24 hours.
- For optimum results, rotate your stock to ensure stored material has not exceeded the shelf life of one year.
- Shelf life of one year can be expected if stored in original sealed container at temperatures between 60 °F (15.6 °C) and 80 °F (26.7 °C). If exposed to lower temperatures, restore to room temperature prior to use.
- Shelf life will be shortened if exposed to elevated temperatures. Rotate and mix thoroughly to insure stored material will not go beyond the shelf life of one year.

Single-Ply LVOC Bonding Adhesive

Coverage Rate:

45-60 ft²/gal (1.10 – 1.47 m²/L) shall be obtained depending on the substrate. Some surfaces are more uneven and porous and will result in a lower coverage rate while smooth, non-porous substrates may result in higher coverage rates. Rates are based on roller application to both mating surfaces. When sprayed and back-rolled, the rate may be slightly higher than when rolled only.

Precautions:

- Review Safety Data Sheet (SDS) prior to use.
- Flammable. Keep away from fire and open flame and other possible ignition sources during storage and use. Do not smoke when using.
- Harmful or fatal if swallowed.
- Avoid prolonged inhalation.
- Avoid prolonged contact with skin. Gloves should be worn (OSHA approved).
- Avoid eye contact by wearing safety goggles with side shields.
- Thinning is not allowed.
- Do not use for splicing.
- Do not use with UltraPly TPO XR membranes.
- Use only in well ventilated areas.
- Cover tightly when not in use.
- Recommended cleaner is Toluene (while fluid).

LEED® Information:

Post Consumer Recycled Content: 0%
Post Industrial Recycled Content: 0%
Manufacturing Location: South Bend, IN

*NOTE: LEED® is a registered trademark of the U.S. Green Building Council.

FM APPROVED

CLASSIFIED C UL US

Typical Properties

Property	Typical Performance
Base:	Polychloroprene Rubber
Color:	Yellow
Solvents:	Tert-butyl Acetate; Ethyl Acetate
Solids by Volume:	22%
Viscosity:	2,500-3,500 Centipiose, R.V.F. Brookfield, #3 Spindle @ 10 RPM
Weight:	7.8 ± 0.20 lb/gal
Specific Gravity:	0.93 ± 0.20
V.O.C. Content:	Actual VOC content, less water and exempt solvents (including Tert-Butyl Acetate) is less than 250 grams/liter as supplied, and is considered VOC exempt in jurisdictions recognizing such exempt solvents.

Single-Ply LVOC Bonding Adhesive

Product Packaging	
Pail:	5 gal (19 L)
Weight per Pail:	Approx. 40 lb (20.4 kg)
Pails per Pallet:	45
Weight per Pallet:	1,800 lb (816.5 kg)

Approved Power Equipment:

Graco Spray Equipment:

287975 30:1 Xtreme® pneumatic pump with Air Assisted Airless package, (1000 psi operating pressure)
Hopper and pump mounted to Heavy Duty Cart, 287884, 288347 Hopper Kit, 222695 Agitator to be mounted by customer, 249133, 249256, 249180 Air Cap for G40 Applicator (800 psi min. fluid atomization; air pressure 80 psi)
GG4321, GG4421 tips

Garlock 2120 Commander Sprayer

18 hp Kohler Engine, 4500 psi Rating, Pump Displacement 45:1, GPM Rating: up to 5 gpm, ½" x 100' hose, 2" Intake pipe with screen 5 or 55 gal drum containers, Graco Spray Tips: .019 to .025 diameter hose (26000 psi operating pressure)

Garlock Twin Gun Airless Sprayer

6.5 hp Honda Engine, 3000 psi Rating, Pump Displacement 30:1, GPM Rating: up to 1 ½ gpm, Up to 400' of single ½" diameter hose, Up to 200' of dual ½" diameter hose, ½" Intake pipe with screen, 5 or 55 gal drum containers, Bulk tank containers, Graco Spray Tips: .019 to .025 diameter hose (1850 psi operating pressure)

Please contact Quality Building Services Technical Department at 1-800-428-4511 for further information.

This sheet is meant to highlight Firestone products and specifications and is subject to change without notice. Firestone takes responsibility for furnishing quality materials which meet published Firestone product specifications. Neither Firestone nor its representatives practice architecture. Firestone offers no opinion on and expressly disclaims any responsibility for the soundness of any structure. Firestone accepts no liability for structural failure or resultant damages. Consult a competent structural engineer prior to installation if the structural soundness or structural ability to properly support a planned installation is in question. No Firestone representative is authorized to vary this disclaimer.

Georgia-Pacific

DensDeck®

Prime Roof Board

Technical Service Hotline 1.800.225.6119 or

www.densdeck.com

Manufacturer

Georgia-Pacific Gypsum
133 Peachtree Street
Atlanta, GA 30303

Georgia-Pacific Canada
2180 Meadowvale Boulevard, Suite 200
Mississauga, ON L5N 5S3

Technical Service Hotline: 1-800-225-6119

Description

DensDeck® Prime Roof Board has been enhanced to provide a broader compatibility and higher performance with roofing adhesives. Face mat enhancements allow adhesives to be applied more uniformly and consistently. In adhered, single ply membrane testing, enhanced DensDeck Prime demonstrated an average of 24% better bond than the original products, when using solvent based adhesives. (Average based on 60 sq.ft./gal coverage rates.)* Choose DensDeck Prime Roof Boards for adhered and self-adhered "peel & stick" roofing systems, as well as hot mopped, cold mastic and torch-applied modified bitumen roofs. Enhanced DensDeck Prime Roof Boards create a stronger and more economical installation by reducing the amounts of mastic or adhesive used and potentially eliminates the field primer. Consult with membrane manufacturer for actual priming requirements.

DensDeck Prime Roof Boards are the first and only fiberglass mat gypsum roof boards with a 90-day weather exposure limited warranty when applied vertically on a parapet wall.** (Limited to 1/2" and 5/8" products only.)

Primary Uses

Roof system manufacturers and designers have found DensDeck Prime Roof Board to be compatible with many types of roofing systems, including: modified asphalt, single-ply, metal systems, recover board, as well as an overlayment for polyisocyanurate and polystyrene insulation. DensDeck Prime Roof Board can also be used as a form board for poured gypsum concrete deck in roof applications as well as a substrate for spray foam roofing systems. 1/2" (12.7 mm) and 5/8" (15.9 mm) DensDeck Prime Roof Board may also be used in vertical applications as a backer board or liner for the roof side of parapet walls.

DensDeck Prime Roof Board may allow the bonding of cold mastic modified bitumen and torching directly to the surface. ***Consult with the system manufacturer for recommendations on this application.***

DensDeck Prime Roof Board is the preferred substrate for vapor retarders.

Standards and Code Approvals

DensDeck Prime Roof Boards are manufactured to meet ASTM C1177 and have the following approvals:

- Florida Product Approved
- Miami-Dade County Product Control Approved

Recommendations and Limitations

DensDeck Prime Roof Boards are manufactured to act with a properly designed roof system following good roofing practices. The actual use of DensDeck Prime Roof Board as a roofing component in any system or assembly is the responsibility of the roofing system's design authority. Consult with the appropriate system manufacturer and/or design authority for system and assembly specifications and instructions on applying other products to DensDeck Prime Roof Board. Georgia-Pacific does not warrant and is not responsible for any systems or assemblies utilizing DensDeck Prime Roof Board or any component in such systems or assemblies other than DensDeck Prime Roof Board.

The need for a separator sheet between the DensDeck Prime Roof Board and the roofing membrane must be determined by the roof membrane manufacturer or roofing system designer.

* Testing was done in accordance with FM approvals 4470, Appendix C: Small Scale Tests, Membrane Delamination Tests for Roofing Membranes and Substrates Using Tensile Loading.

** For complete warranty details, visit www.DensDeck.com. (Limited to 1/2" and 5/8" products only.)

Confirm any priming requirements with the membrane manufacturer. When applying solvent-based adhesives or primers, allow sufficient time for the solvent to flash off to avoid damage to roofing components.

DensDeck Prime Roof Boards should not be subjected to abnormal or excessive loads or foot traffic, such as, but not limited to, use on plaza decks or under steel-wheeled equipment that may fracture or damage the panels. Provide suitable roofing system protection when required.

When using DensDeck Prime Roof Boards for hot-mopped applications, Georgia-Pacific recommends maximum asphalt application temperatures of 425°F (218°C) to 450°F (232°C). Application temperatures above these recommended temperatures may adversely affect roof system performance. Consult and follow the roofing system manufacturer's specifications for full mopping applications and temperature requirements.

When using DensDeck Prime Roof Board as a substrate for torch applications, ensure that the product is dry and that the proper torching technique is used. Limit the heat to the DensDeck Prime Roof Board. Maintain a majority of the torch flame directly on the roll.

Conditions beyond the control of Georgia-Pacific, such as weather conditions, dew, leaks, application temperatures and techniques may cause adverse effects with roofing systems.

Handling and Use–CAUTION

This product contains fiberglass facings which may cause skin irritation. Dust and fibers produced during the handling and installation of the product may cause skin, eye and respiratory tract irritation. Avoid breathing dust and minimize contact with skin and eyes. Wear long sleeve shirts, long pants and eye protection. Always maintain adequate ventilation. Use a dust mask or NIOSH/MSHA approved respirator as appropriate in dusty or poorly ventilated areas.

Moisture Management

DensDeck Prime Roof Boards, like other components used in roofing systems, must be protected from exposure to moisture before, during and after installation.

Remove the plastic packaging from all DensDeck Prime Roof Board immediately upon receipt of delivery. Failure to remove the plastic packaging may result in entrapment of condensation or moisture. DensDeck Prime Roof Board stored outside must be stored level and off the ground and protected by a breathable waterproof covering. Provide means for air circulation around and under stored bundles of DensDeck Prime Roof Board. DensDeck Prime Roof Board must be covered the same day as installed.

Avoid application of DensDeck Prime Roof Boards during rain, heavy fog and any other conditions that may deposit moisture on the surface, and avoid the overuse of non-vented, direct-fired heaters during winter months. When roofing systems are installed on new poured concrete or light weight concrete decks or when re-roofing over an existing concrete deck, a vapor barrier should be installed above the concrete to retard the migration of water from the concrete into the roof assembly. Always consult the roofing system manufacturer or design authority for specific instructions for applying other products to DensDeck Prime Roof Boards.

Moisture vapor movement by convection must be eliminated, and the flow of water by gravity through imperfections in the roof system must be controlled. After a leak has occurred, no condensation on the upper surface of the system should be tolerated, and the water introduced by the leak must be dissipated to the building interior in a minimum amount of time.

Although DensDeck Prime Roof Boards are engineered with fiberglass facings and high density gypsum cores, the presence of free moisture can have a detrimental effect on the performance of the product and the installation of roofing membranes. For example, hot asphalt applications can blister; torched modified bitumen may not properly bond; and adhesives for single ply membranes may not dry properly.

Submittal Approvals

Job Name _____

continued→

Contractor _____

Date _____

Stamps / Signatures

Moisture accumulation may also significantly decrease wind uplift and vertical pull resistance in the system or assembly. DensDeck® Prime Roof Boards containing excessive free moisture content may need to be evaluated for structural stability to assure wind uplift performance.

Fire Resistance Classifications

DensDeck Prime Roof Boards are excellent fire barriers over combustible and noncombustible roof decks, including steel decks.

UL 790 Classification. DensDeck Prime Roof Boards have been classified by Underwriters Laboratories LLC (UL) for use as a fire barrier over combustible and noncombustible decks in accordance with the ANSI/UL 790 test standard. The UL classification includes a comprehensive Class A, B or C rating. For additional information concerning the UL 790 classification, consult the UL Certification Directory.

UL 1256 Classification. DensDeck Prime Roof Boards have also been classified by UL in roof deck constructions for internal (under deck) fire exposure in accordance with the ANSI/UL 1256 Steiner Tunnel test. For additional information concerning the UL 1256 classification, consult the UL Certification Directory.

FM Class 1 Approvals. DensDeck Prime Roof Boards are included in numerous roofing assemblies with a Factory Mutual (FM) Class 1 fire rating. 1/4" (6.4 mm) DensDeck Prime Roof Boards have passed testing under the FM Calorimeter Standard 4450 and have been approved by FM as such for insulated steel deck roofs when installed according to the conditions identified by FM. For more information concerning FM Approvals and FM Class 1 assemblies with DensDeck Prime Roof Boards, consult FM or RoofNav®.

Type X. 5/8" (15.9 mm) DensDeck® Prime Fireguard® Roof Boards are manufactured to meet the "Type X" requirements of ASTM C1177 for increased fire resistance beyond regular gypsum board.

UL Fire Resistance Ratings. 5/8" (15.9 mm) DensDeck Prime Fireguard Roof Boards are designated as **Type DD** by UL and included in assembly designs investigated by UL for hourly fire resistance ratings. 5/8" (15.9 mm) DensDeck Prime Fireguard Roof Boards may also replace any unclassified 5/8" (15.9 mm) gypsum board in an assembly in the UL Fire Resistance Directory under the prefix "P".

Flame Spread and Smoke Developed. When tested in accordance with ASTM E84, DensDeck Prime Roof Boards had Flame Spread 0, Smoke Developed 0.

Wind Uplift

DensDeck Prime Roof Boards are included in numerous assemblies evaluated by FM or other independent laboratories for wind uplift performance. For information concerning such assemblies, please visit www.roofnav.com.

Physical Properties

Properties	1/4" (6.4 mm)	1/2" (12.7mm)	5/8" (15.9 mm)
Thickness, nominal	1/4" (6.4 mm) ± 1/16" (1.6 mm)	1/2" (12.7 mm) ± 1/32" (.8 mm)	5/8" (15.9 mm) ± 1/32" (.8 mm)
Width, standard	4' (1219 mm) ± 1/8" (3 mm)	4' (1219 mm) ± 1/8" (3 mm)	4' (1219 mm) ± 1/8" (3 mm)
Length, standard	4' (1219 mm) and 8' (2438 mm) ± 1/4" (6.4 mm)	4' (1219 mm) and 8' (2438 mm) ± 1/4" (6.4 mm)	4' (1219 mm) and 8' (2438 mm) ± 1/4" (6.4 mm)
Weight, nominal, lbs./sq. ft. (Kg/m²)	1.2 (5.9)	2.0 (9.8)	2.5 (12.2)
Surfacing	Fiberglass mat with non-asphaltic coating	Fiberglass mat with non-asphaltic coating	Fiberglass mat with non-asphaltic coating
Flexural Strength[1], parallel, lbf. min. (N)	≥40 (178)	≥80 (356)	≥100 (444)
Flute Spanability[2]	2-5/8" (66.7 mm)	5" (127 mm)	8" (203 mm)
Permeance[3], Perms (ng/Pa•S•m²)	>30 (>1710)	>23 (>1300)	>17 (>970)
R Value[4], ft²•°F•hr/BTU (m²•K/W)	.28	.56	.67
Linear Variation with Change in Temp., in/in °F (mm/mm/C°)	8.5×10^{-6} (15.3×10^{-6})	8.5×10^{-6} (15.3×10^{-6})	8.5×10^{-6} (15.3×10^{-6})
Linear Variation with Change in Moisture	6.25×10^{-6}	6.25×10^{-6}	6.25×10^{-6}
Water Absorption[5], % max	<10	<10	<10
Compressive Strength[6], psi nominal	900	900	900
Surface Water Absorption, grams, nominal	<2.0	<2.0	<2.0
Flame Spread, Smoke Developed (ASTM E84)	0/0	0/0	0/0
Bending Radius	4' (1219 mm)	6' (1829 mm)	8' (2438 mm)

1. Tested in accordance with ASTM C473 method B.
2. Tested in accordance with ASTM E661.
3. Tested in accordance with ASTM E96 (dry cup method).
4. Tested in accordance with ASTM C518 (heat flow meter).
5. Specified values per ASTM C1177.
6. Tested in accordance with ASTM C473.

Georgia-Pacific Gypsum

U.S.A. Georgia-Pacific Gypsum LLC
Georgia-Pacific Gypsum II LLC
Canada Georgia-Pacific Canada LP

SALES INFORMATION AND ORDER PLACEMENT
U.S.A. West: **1-800-824-7503**
Midwest: **1-800-876-4746**
South Central: **1-800-231-6060**
Southeast: **1-800-327-2344**
Northeast: **1-800-947-4497**
CANADA Canada Toll Free: **1-800-387-6823**
Quebec Toll Free: **1-800-361-0486**

TECHNICAL INFORMATION
U.S.A. and Canada: **1-800-225-6119,** www.gpgypsum.com

©2015 Georgia-Pacific Gypsum LLC. All rights reserved. 5/15. GP-TM. Lit. Item #102169.

TRADEMARKS DENSDECK, FIREGUARD and the GEORGIA-PACIFIC logo are trademarks owned by or licensed to Georgia-Pacific Gypsum LLC. ROOFNAV is a registered mark of FM Global.

WARRANTIES, REMEDIES AND TERMS OF SALE For current warranty information for this product, please go to www.gpgypsum.com and select the product for warranty information. All sales of this product by Georgia-Pacific are subject to our Terms of Sale available at www.gpgypsum.com.

UPDATES AND CURRENT INFORMATION The information in this document may change without notice. Visit our website at www.gpgypsum.com for updates and current information.

CAUTION For product fire, safety and use information, go to www.buildgp.com/safetyinfo or call 1-800-225-6119.

FIRE SAFETY CAUTION Passing a fire test in a controlled laboratory setting and/or certifying or labeling a product as having a one-hour, two-hour, or any other fire resistance or protection rating and, therefore, as acceptable for use in certain fire rated assemblies/systems, does not mean that either a particular assembly/system incorporating the product, or any given piece of the product itself, will necessarily provide one-hour fire resistance, two-hour fire resistance, or any other specified fire resistance or protection in an actual fire. In the event of an actual fire, you should immediately take any and all actions necessary for your safety and the safety of others without regard for any fire rating of any product or assembly/system.

ISO 95+™ GL Insulation

Item Description
Flat and Tapered Polyiso Boards

Flat Boards:	4' x 4' (1.22 m x 1.22 m)
	4' x 8' (1.22 m x 2.44 m)
Tapered Boards:	4' x 4' (1.22 m x 1.22 m)
Slope range:	1/16" per foot (.5%) to 1/2" per foot (4%)
Thickness range:	0.5" (12.7 mm) to 4.0" (101.6 mm)

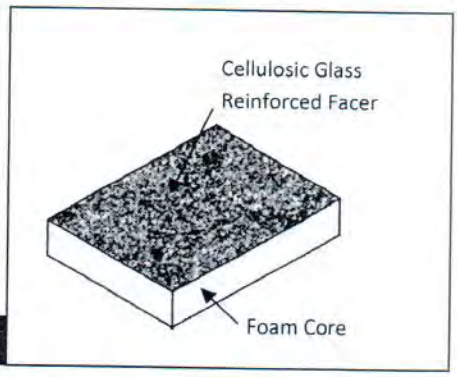

Meets or exceeds performance requirements of ASTM C 1289, Type II, Class 1

Product Information

Description:

Firestone ISO 95+ GL flat and tapered roof insulation consists of a closed-cell polyiso foam core laminated to a black glass reinforced mat facer on both major surfaces. Flat and tapered ISO 95+ GL insulation provides outstanding thermal performance on commercial roofing applications, while providing positive rooftop drainage to help eliminate ponding water when tapered ISO 95+ GL insulation is used.

Method of Application:

1. Insulation shall be neatly fitted to all roof penetrations, projections and nailers.
2. No more insulation shall be installed than can be covered with membrane and completed before the end of each day's work or before the onset of inclement weather.
3. Firestone ISO 95+ GL board may be installed using:
   - Firestone fasteners and plates
     - NOTE: For ballasted systems, the top layer of Firestone insulation may not be mechanically attached.
   - Hot asphalt (requires a cover board)
   - Firestone approved insulation adhesives
     - I.S.O. Twin Pack™
     - I.S.O. Stick™
     - I.S.O. Spray™ R
     - I.S.O. FIX™ II

Acceptable Immediate Substrates:

- 3,000 psi Structural concrete (must be clean, dry, and properly cured)
- Steel deck (min 22 ga)
- Plywood and OSB (min ½")
- Lightweight concrete
- Gypsum deck (min 2")

NOTE: Please consult the Design Guides and QuickSpecs online at www.firestonebpco.com to review specific information regarding the assembly.

Storage:

- Keep insulation dry at all times
- Elevate insulation above the deck or ground
- Cover insulation with waterproof tarps

ISO 95+™ GL Insulation

Precautions:

- Polyiso foam will burn if exposed to a flame of sufficient heat and intensity. Keep away from heat, sparks, and open flames.
- Protect against dust that may be generated during installation.
- Refer to Safety Data Sheet (SDS) for additional information.
- Take care when transporting and handling Firestone insulation to avoid physical damage.

Specification Compliance:

ASTM C1289, Type II, Class 1
UL Classified – UL1256
FM Class 1 Approved
Manufactured in an ISO 9001 Registered Facility
CAN/ULC-S704, Type 1, Class 3

CCMC 13274-L

LEED® Information:

See Recycled Content in table below.
Manufacturing Locations: Florence, KY; De Forest, WI; Jacksonville, FL; Corsicana, TX; Salt Lake City, UT; Bristol, Ct; Youngwood, PA

NOTE: Miami Dade Classified polyiso is only produced in the Jacksonville, FL and Youngwood, PA facilities.

Typical Properties (Meets ASTM C 1289, Type II, Class 1)

Property	ASTM Test Method	Firestone Typical Performance
Compressive Strength:	D1621	20 psi (138 kPa)
Density:	D1622	2 pcf (32 kg/m^3)
Dimensional Stability:	D2126	<2%
Moisture Vapor Transmission:	E96	<1 perm (<57.5 ng/(Pa•s•m^2))
Water Absorption:	C209	<1% by volume
Service Temperature:	----	-100 to 250 °F (-73 to 121°C)
Flame Spread:	E84	Index 50
Smoke Development:	E84	Index 160 - 180

**25 psi (172 kPa) available upon request.*

ISO 95+™ GL Insulation

Product Information

Thickness*		(R-Value)	Max Flute Span		Approx. Recycled Content		
inches	mm	**	inches	mm	Post Consumer	Post Industrial	Total
1.0	25.40	5.7	2.62	66.67	37%	15%	52%
1.1	27.94	6.3	2.62	66.67	36%	15%	51%
1.2	30.48	6.8	2.62	66.67	34%	15%	49%
1.3	33.02	7.4	3.67	93.34	32%	15%	47%
1.4	35.56	8.0	3.67	93.34	30%	15%	45%
1.5	38.10	8.6	4.37	111.12	29%	15%	44%
1.6	40.64	9.1	4.37	111.12	27%	15%	42%
1.7	43.18	9.7	4.37	111.12	26%	15%	41%
1.75	44.45	10.0	4.37	111.12	26%	15%	41%
1.8	45.72	10.3	4.37	111.12	25%	15%	40%
1.9	48.26	10.8	4.37	111.12	24%	15%	39%
2.0	50.80	11.4	4.37	111.12	24%	15%	39%
2.1	53.34	12.0	4.37	111.12	22%	15%	37%
2.2	55.88	12.6	4.37	111.12	21%	15%	36%
2.25	57.15	12.9	4.37	111.12	21%	15%	36%
2.3	58.42	13.2	4.37	111.12	21%	15%	36%
2.4	60.96	13.8	4.37	111.12	20%	15%	35%
2.5	63.50	14.4	4.37	111.12	20%	15%	35%
2.6	66.04	15.0	4.37	111.12	19%	15%	34%
2.7	68.58	15.6	4.37	111.12	18%	15%	33%
2.75	69.85	15.9	4.37	111.12	18%	15%	33%
2.8	71.12	16.2	4.37	111.12	18%	15%	33%
2.9	73.66	16.8	4.37	111.12	17%	15%	32%
3.0	76.20	17.4	4.37	111.12	17%	15%	32%
3.1	78.74	18.0	4.37	111.12	16%	15%	31%
3.2	81.28	18.6	4.37	111.12	16%	15%	31%
3.25	82.55	18.9	4.37	111.12	16%	15%	31%
3.3	83.82	19.2	4.37	111.12	16%	15%	31%
3.4	86.36	19.9	4.37	111.12	15%	15%	30%
3.5	88.90	20.5	4.37	111.12	15%	15%	30%
3.6	91.44	21.1	4.37	111.12	14%	15%	29%
3.7	93.98	21.7	4.37	111.12	14%	15%	29%
3.75	95.25	22.0	4.37	111.12	14%	15%	29%
3.8	96.52	22.3	4.37	111.12	14%	15%	29%
3.9	99.06	23.0	4.37	111.12	14%	15%	29%
4.0	101.60	23.6	4.50	114.30	14%	15%	29%

*Other thicknesses available upon request.
**R- values provide a 15-year time-weighted average in accordance with CAN/ULC-S770.

Please contact Quality Building Services Technical Department at 1-800-428-4511 for further information.

This sheet is meant to highlight Firestone products and specifications and is subject to change without notice. Firestone takes responsibility for furnishing quality materials which meet published Firestone product specifications or other technical documents, subject to normal roof manufacturing tolerances. Neither Firestone nor its representatives practice architecture. Firestone offers no opinion on and expressly disclaims any responsibility for the soundness of any structure. Firestone accepts no liability for structural failure or resultant damages. Consult a competent structural engineer prior to installation if the structural soundness or structural ability to properly support a planned installation is in question. No Firestone representative is authorized to vary this disclaimer.

1
A.2.

MEMBRANE TERMINATION AT EXISTING WALL

N.T.S.

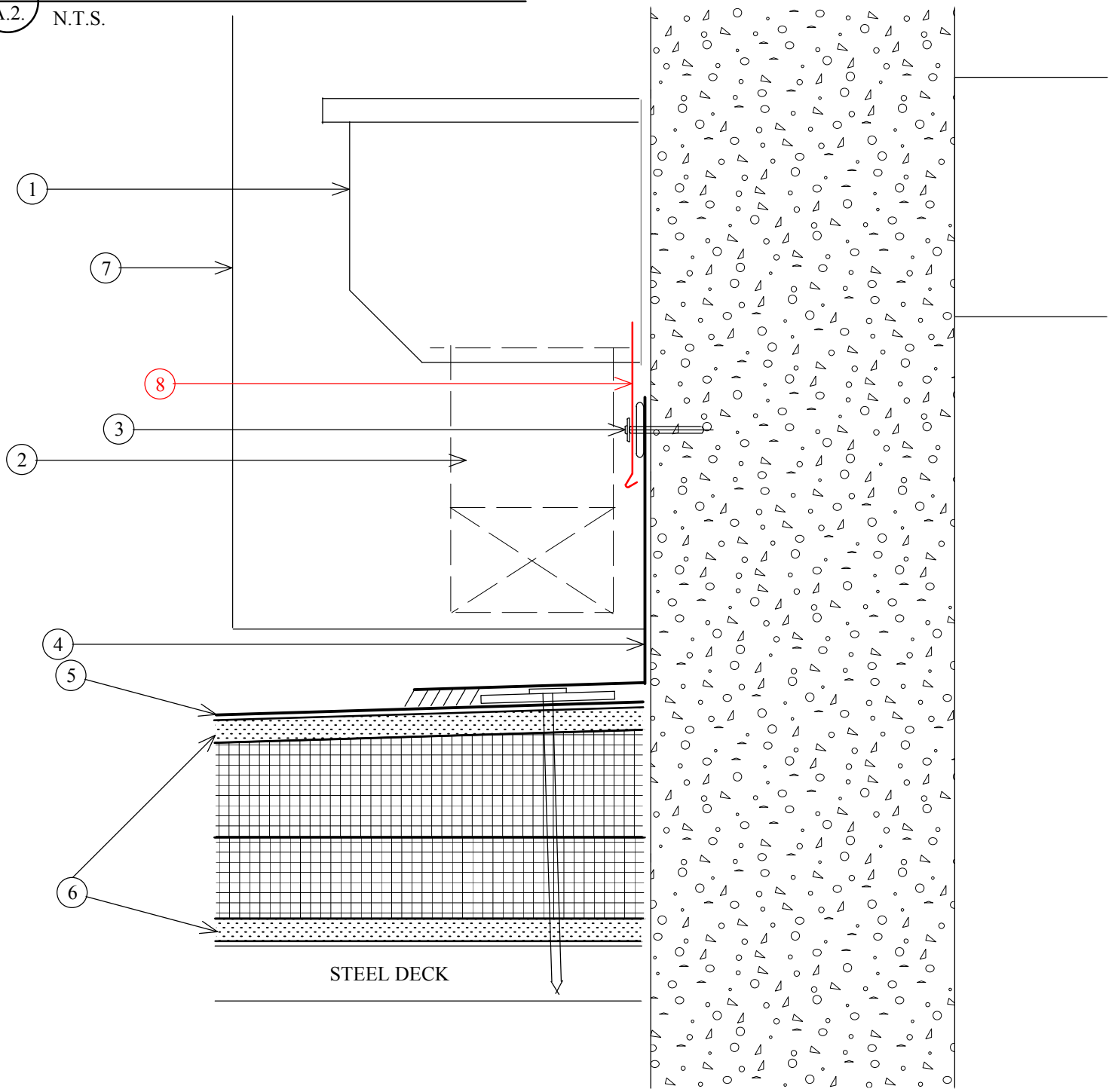

1. EXISTING OVERLFOW SCUPPER BEYOND.
2. DOWNSPOUT FROM EXIST. SCUPPER TO WALL GAP.
3. MEMBRANE TERMINATION.
4. TPO MEMBRANE BASE FLASHING.
5. TPO FIELD ROOF MEMBRANE.
6. INSULATION ASSEMBLY.
7. GAP IN PARAPET WALL.
8. COMPRESSION FLASING SLIPPED UNDER EXISTING METAL WORK.

DWG. #: A.2.	REF. DWG. # 1/A-301
TITLE:	MEMBRANE TERMINATION AT EXISTING WALL
PROJECT:	RENOVATION AT THE ADMINISTRATION'S PRINCE FREDERICK FACILTIY
MATERIAL:	.032" PREFINISHED ALUMINUM
DATE: 06-15-2017	SCALE: NOT TO SCALE DIMENSIONS SUBJECT TO FIELD MEASUREMENTS

Orndorff & Spaid, Inc.
11722 Old Baltimore Pike - Beltsville, Md 20705-1292
Tel: (301)-937-5911 Fax: (301)-937-3918

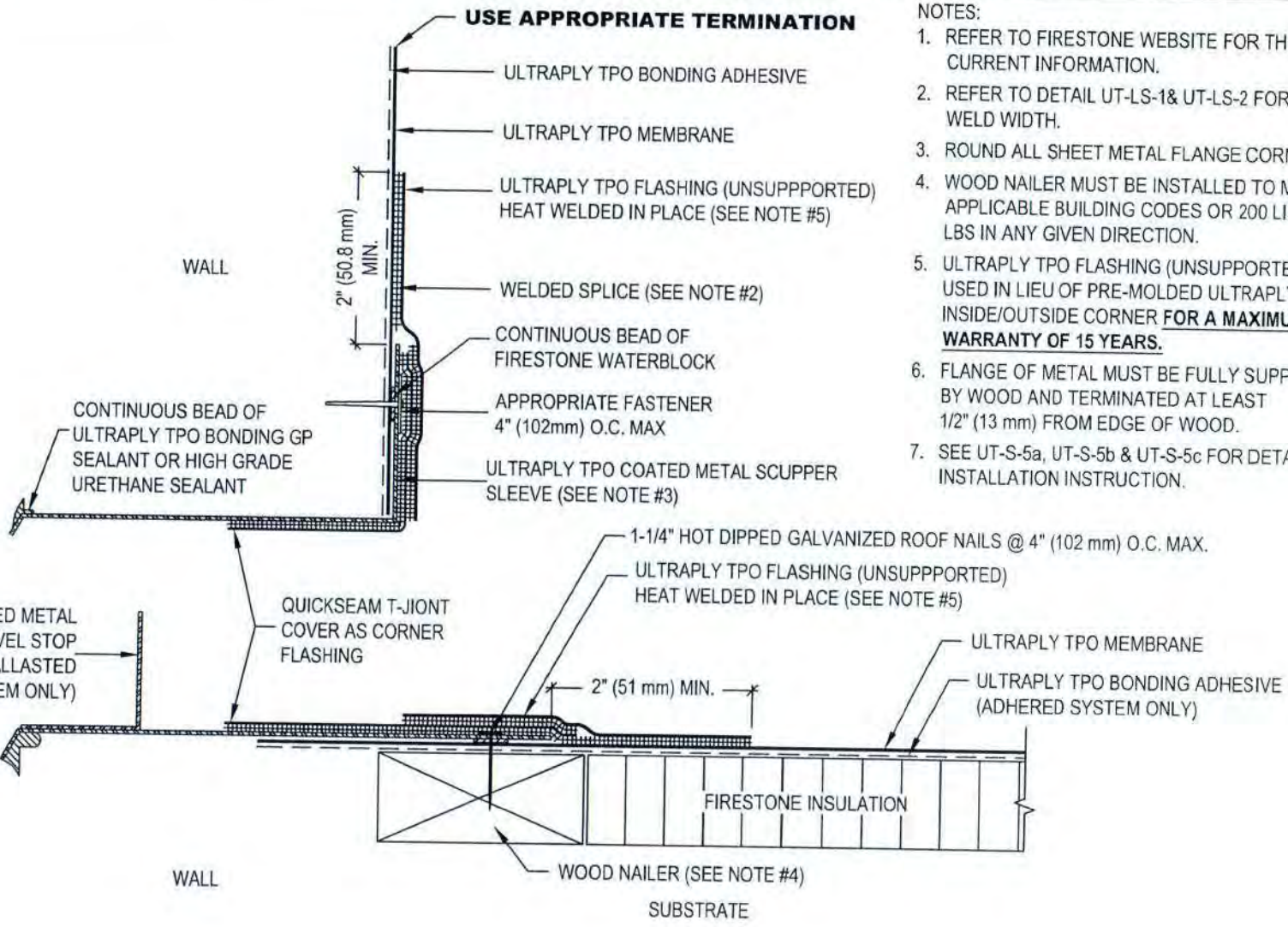

NOTES:

1. REFER TO FIRESTONE WEBSITE FOR THE MOST CURRENT INFORMATION.
2. REFER TO DETAIL UT-LS-1& UT-LS-2 FOR WELD WIDTH.
3. ROUND ALL SHEET METAL FLANGE CORNERS.
4. WOOD NAILER MUST BE INSTALLED TO MEET APPLICABLE BUILDING CODES OR 200 LINEAR 200 LBS IN ANY GIVEN DIRECTION.
5. ULTRAPLY TPO FLASHING (UNSUPPORTED) MAY BE USED IN LIEU OF PRE-MOLDED ULTRAPLY TPO INSIDE/OUTSIDE CORNER **FOR A MAXIMUM WARRANTY OF 15 YEARS.**
6. FLANGE OF METAL MUST BE FULLY SUPPORTED BY WOOD AND TERMINATED AT LEAST 1/2" (13 mm) FROM EDGE OF WOOD.
7. SEE UT-S-5a, UT-S-5b & UT-S-5c FOR DETAILED INSTALLATION INSTRUCTION.

Firestone BUILDING PRODUCTS
NOBODY COVERS YOU BETTER.™
www.firestonebpco.com

THRU-WALL ULTRAPLY TPO COATED METAL SCUPPER

ULTRAPLY™ TPO

ACCEPTABLE SYSTEMS: ALL

MAXIMUM WARRANTY: **20 YEARS**

ISSUE / REVISION DATE: 7/22/2014

NOT TO SCALE

DETAIL NO. UT-S-5

100

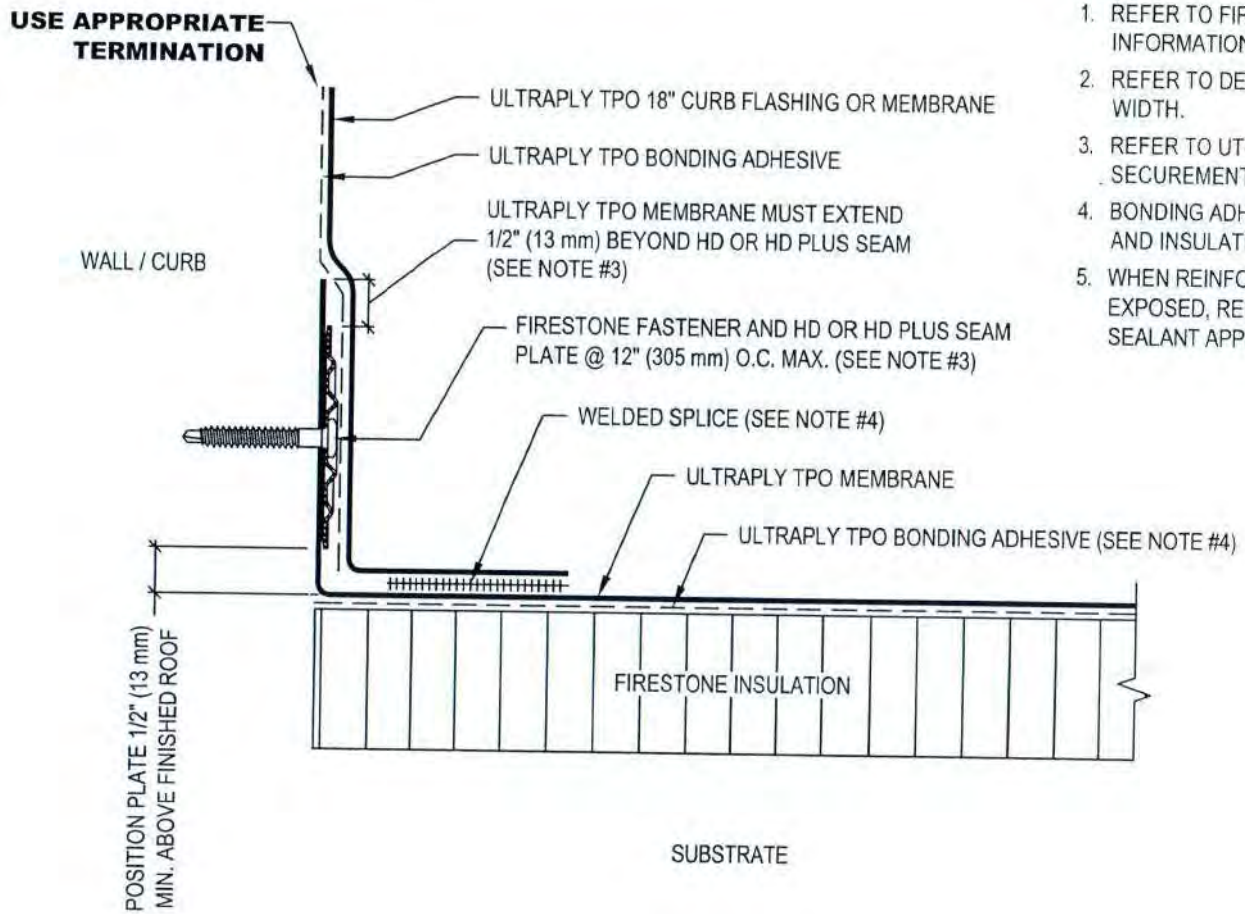

NOTES:

1. REFER TO FIRESTONE WEBSITE FOR MOST CURRENT INFORMATION.
2. REFER TO DETAIL UT-LS-1 OR UT-LS-2 FOR WELD WIDTH.
3. REFER TO UT-BT-16 & UT-BT-17 FOR MEMBRANE SECUREMENT AT CORNERS.
4. BONDING ADHESIVE REQUIRED BETWEEN MEMBRANE AND INSULATION FOR FULLY ADHERED SYSTEMS.
5. WHEN REINFORCEMENT OF TPO MEMBRANE IS EXPOSED, REFER TO UT-LS-14 FOR CUT EDGE SEALANT APPLICATION.

Firestone
BUILDING PRODUCTS
NOBODY COVERS YOU BETTER.™
www.firestonebpco.com

BASE TIE-IN WITH HD SEAM PLATES FASTENED TO WALL / CURB

ULTRAPLY™ TPO | ACCEPTABLE SYSTEMS: ALL

MAXIMUM WARRANTY: **20 YEARS**

ISSUE / REVISION DATE: 6/26/2014

NOT TO SCALE

DETAIL NO. UT-BT-2

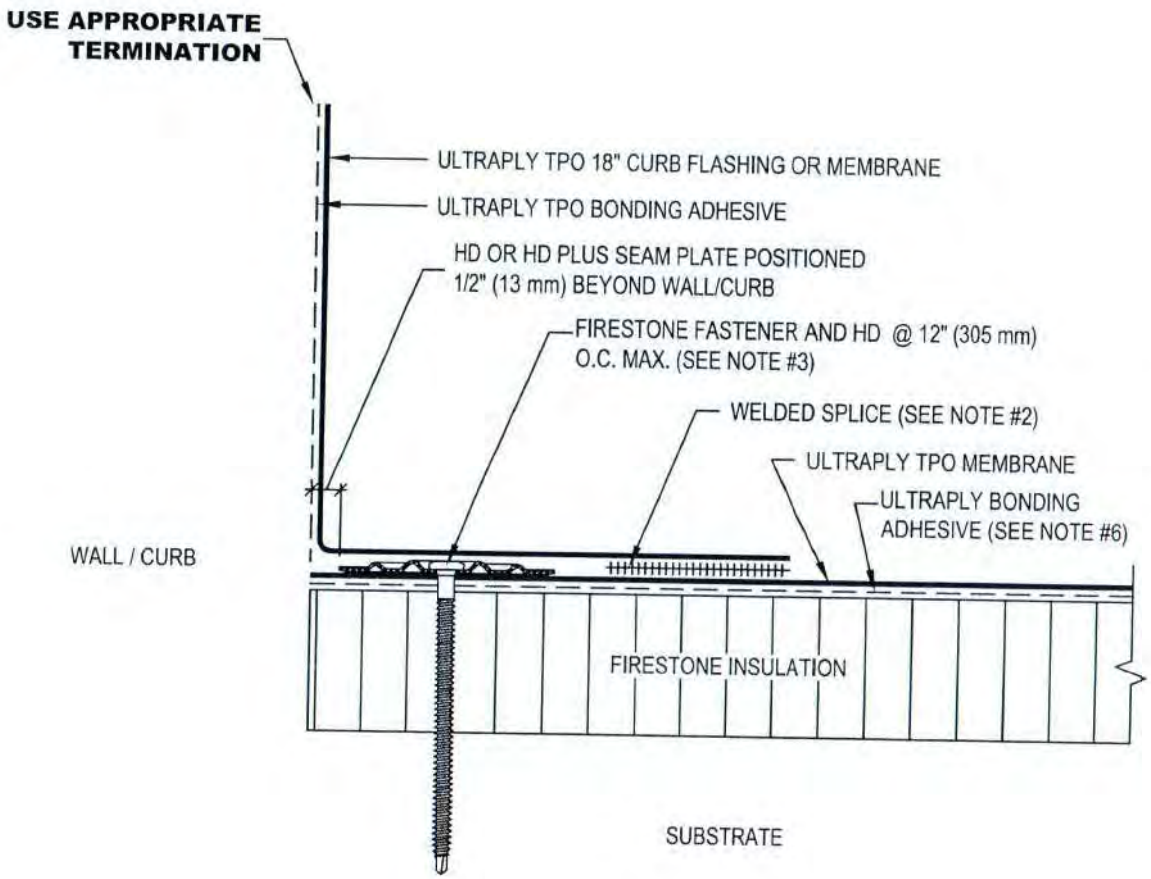

NOTES:

1. REFER TO FIRESTONE WEBSITE FOR MOST CURRENT INFORMATION.
2. REFER TO DETAIL UT-LS-1 OR UT-LS-2 FOR WELD WIDTH.
3. MAXIMUM 6" (152 mm) LONG FASTENERS (NOTE: WOOD BLOCKING MAY BE SUBSTITUTED FOR INSULATION TO REDUCE FASTENER LENGTH REQUIREMENTS).
4. IN CASE OF OBSTRUCTION REFER TO DETAIL UT-BT-5.
5. REFER TO UT-BT-16 & UT-BT-17 FOR MEMBRANE SECUREMENT AT CORNERS.
6. BONDING ADHESIVE REQUIRED BETWEEN MEMBRANE AND INSULATION FOR FULLY ADHERED SYSTEMS.
7. WHEN REINFORCEMENT OF TPO MEMBRANE IS EXPOSED, REFER TO UT-LS-14 FOR CUT EDGE SEALANT APPLICATION.

Firestone BUILDING PRODUCTS
NOBODY COVERS YOU BETTER.™
www.firestonebpco.com

BASE TIE-IN WITH HD SEAM PLATES FASTENED TO DECK

ULTRAPLY™ TPO

ACCEPTABLE SYSTEMS: ALL

MAXIMUM WARRANTY: **20 YEARS**

ISSUE / REVISION DATE: 7/01/2014

NOT TO SCALE

DETAIL NO. UT-BT-1

NOTES:

1. REFER TO FIRESTONE WEBSITE FOR MOST CURRENT INFORMATION.
2. INSTALL FIRESTONE TERMINATION BAR WITH 1/4" (6 mm) GAP BETWEEN ADJOINING SECTIONS.
3. TERMINATION BAR MUST BE CUT AT INSIDE AND INSIDE CORNERS. **DO NOT BEND AROUND CORNERS.**
4. TERMINATION BAR MUST BE FASTENED WITHIN 1" (25 mm) MAX. OF ALL SECTION ENDS.

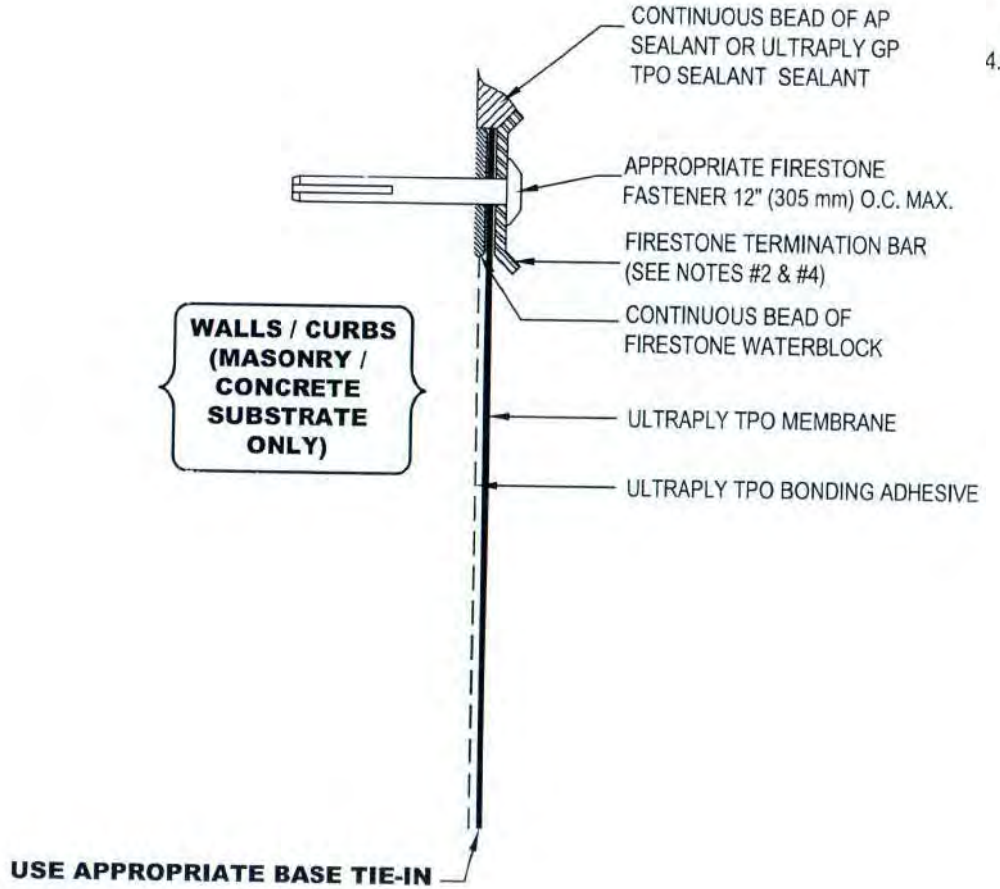

MASONRY AND CONCRETE WALLS / CURBS MUST BE WATERPROOFED AND MAINTAINED IN ORDER FOR ANY SURFACE MOUNTED TERMINATION TO BE EFFECTIVE

Firestone BUILDING PRODUCTS
NOBODY COVERS YOU BETTER.™
www.firestonebpco.com

TERMINATION WITH TERMINATION BAR

ULTRAPLY™ TPO | ACCEPTABLE SYSTEMS: ALL

MAXIMUM WARRANTY: **20 YEARS**

ISSUE / REVISION DATE: 7/22/2014

NOT TO SCALE

DETAIL NO. UT-T-1

1
A.3

FLASHING AT WALL GAP

N.T.S.

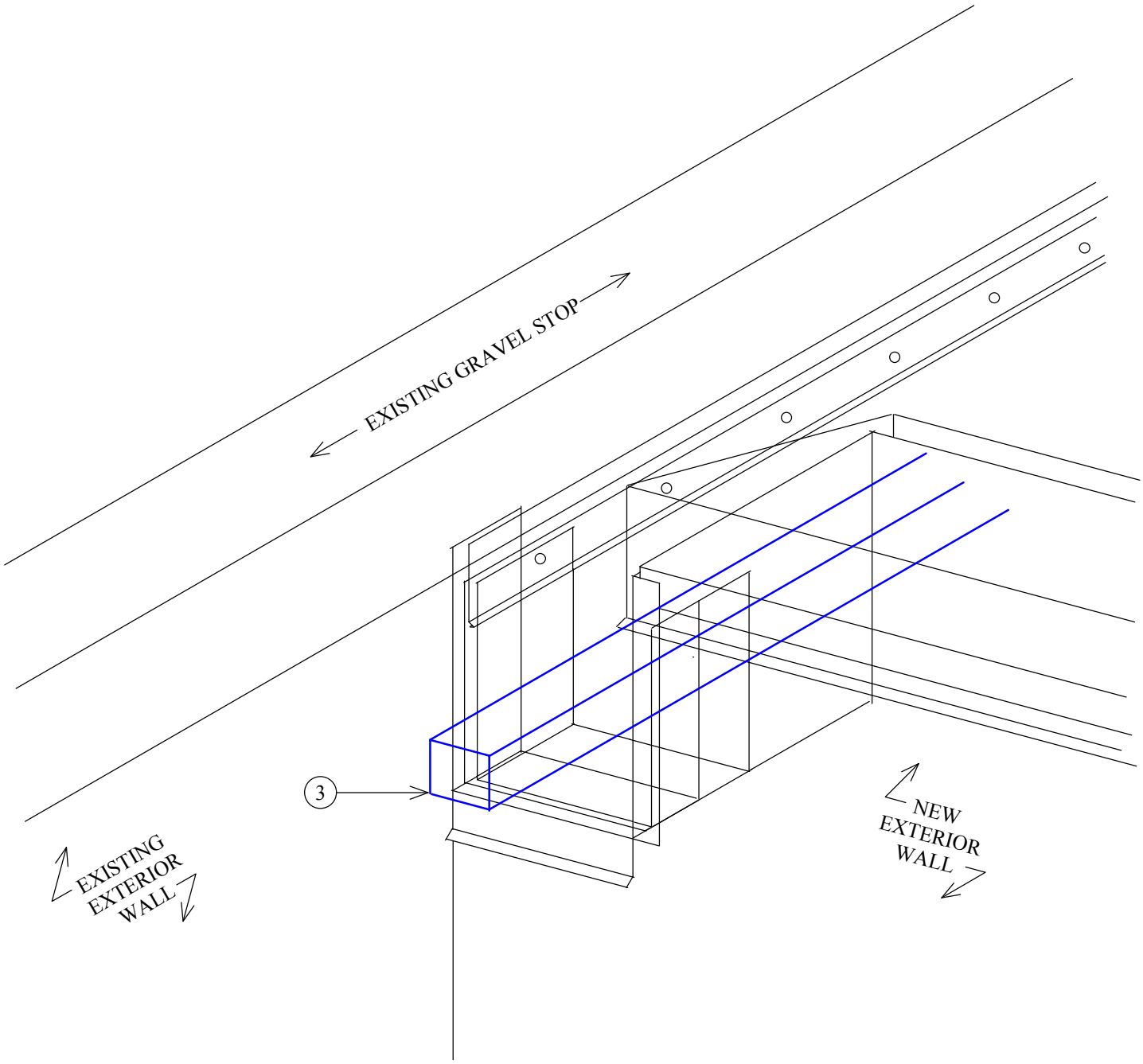

1. SCUPPER FLANGE / TRIM.
2. EXISTING COPING.
3. DOWNSPOUT THRU- WALL GAP.
4. NEW COPING.
5. TPO BASE FLASH. MEMBRANE UP AND OVER PARAPET WALL.
6. TPO FLASHING TAPE.
7. TPO BASE FLASHING.
8. BLDG. FACADE

DWG. #: A.3	REF. DWG. # TYPICAL	TITLE: FLASHING AT GAP IN PARAPET WALL
		PROJECT: RENOVATION AT THE ADMINISTRATION'S PRINCE FREDERICK FACILTIY
		MATERIAL: .032" PREFINISHED ALUMINUM
		DATE: 06-15-2017
		SCALE: NOT TO SCALE. DIMENSIONS SUBJECT TO FIELD MEASUREMENTS.

Orndorff & Spaid, Inc.
11722 Old Baltimore Pike - Beltsville, Md 20705-1292
Tel: (301)-937-5911 Fax: (301)-937-3918

1 / A.4 SCUPPER, HEAD, DOWNSPOUT
N.T.S.

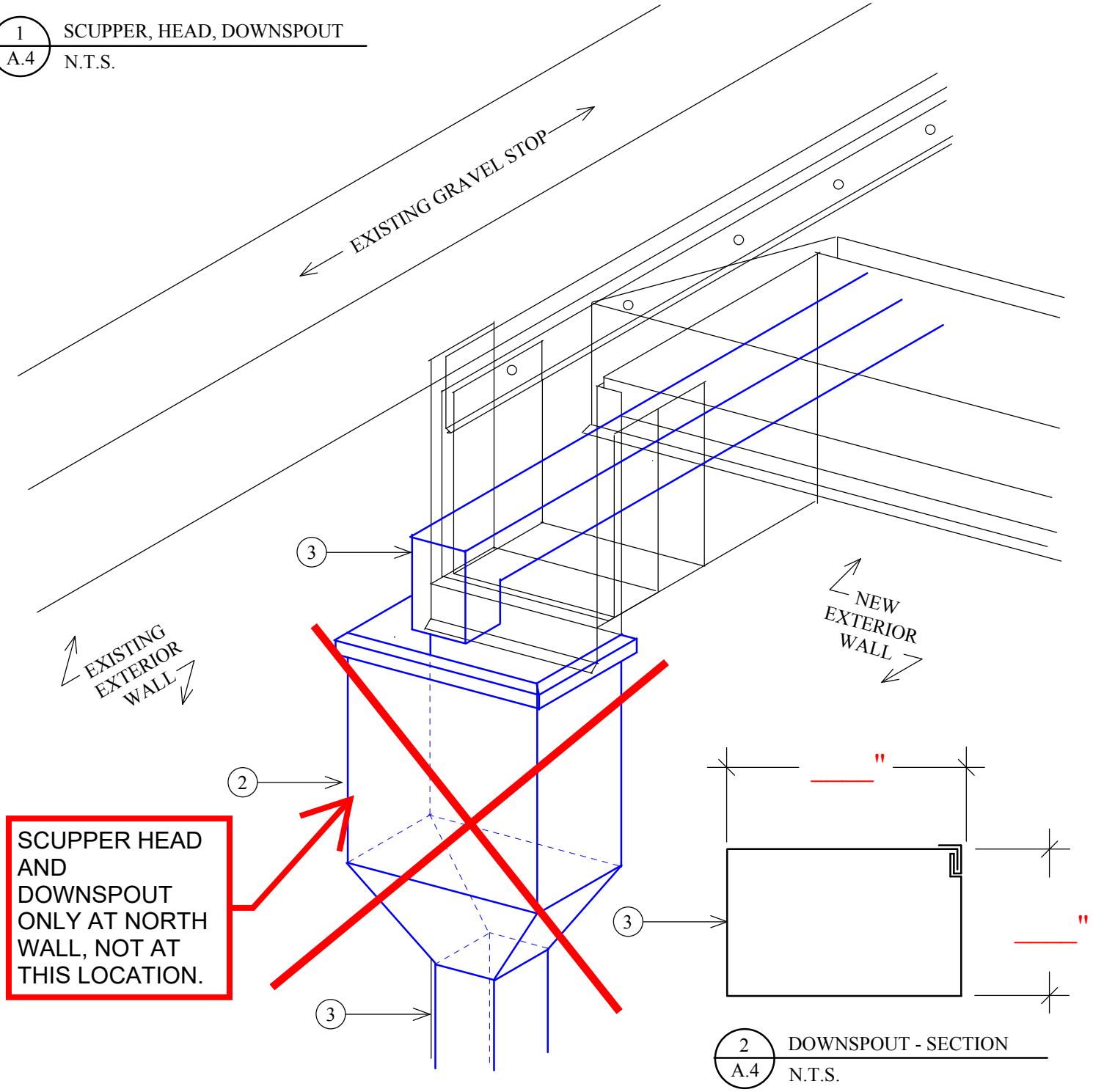

2 / A.4 DOWNSPOUT - SECTION
N.T.S.

1. SCUPPER FLANGE / TRIM.
2. SCUPPER HEAD.
3. DOWNSPOUT. ARCHITECT TO DETERMINE SIZE.
4. FACADE WALL.

DWG. #: A.4	REF. DWG. # TYPICAL	TITLE: HEAD, DOWNSPOUT AT WALL GAP.
		PROJECT: RENOVATION AT THE ADMINISTRATION'S PRINCE FREDERICK FACILTIY
		MATERIAL: .032" PREFINISHED ALUMINUM
		DATE: 06-15-2017
		SCALE: NOT TO SCALE. DIMENSIONS SUBJECT TO FIELD MEASUREMENTS.

Orndorff & Spaid, Inc.
11722 Old Baltimore Pike - Beltsville, Md 20705-1292
Tel: (301)-937-5911 Fax: (301)-937-3918

1 / A.5 FLASHING AT WALL GAP

N.T.S.

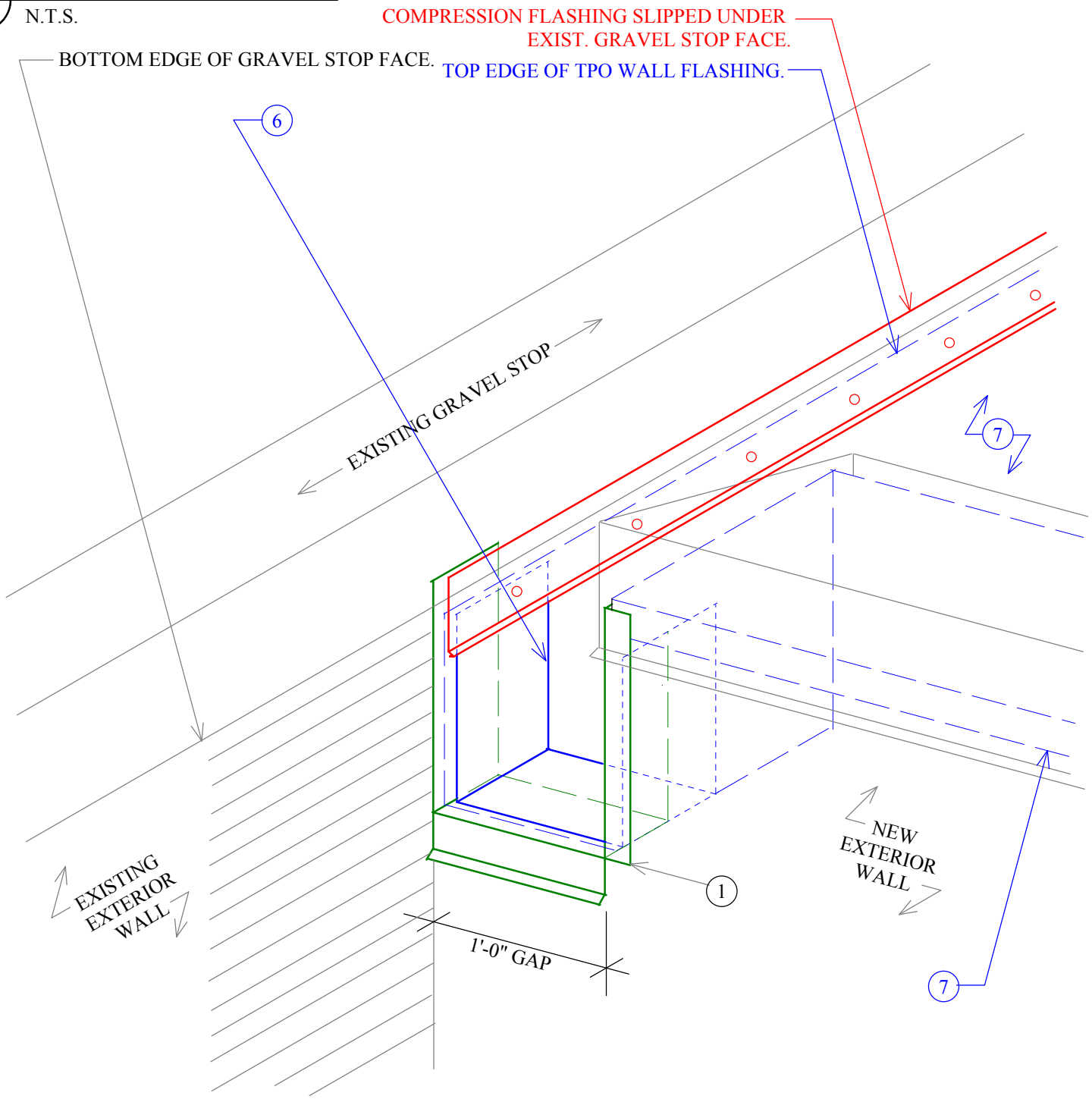

1. SCUPPER FLANGE / TRIM.
2. EXISTING COPING.
3. DOWNSPOUT THRU- WALL GAP.
4. NEW COPING.
5. TPO BASE FLASH. MEMBRANE UP AND OVER PARAPET WALL.
6. TPO FLASHING TAPE.
7. TPO BASE FLASHING.
8. BLDG. FACADE

DWG. #: A.5	REF. DWG. # TYPICAL	TITLE: FLASHING AT GAP IN PARAPET WALL
		PROJECT: RENOVATION AT THE ADMINISTRATION'S PRINCE FREDERICK FACILTIY
		MATERIAL: .032" PREFINISHED ALUMINUM
		DATE: 06-15-2017
		SCALE: NOT TO SCALE. DIMENSIONS SUBJECT TO FIELD MEASUREMENTS.

Orndorff & Spaid, Inc.
11722 Old Baltimore Pike - Beltsville, Md 20705-1292
Tel: (301)-937-5911 Fax: (301)-937-3918

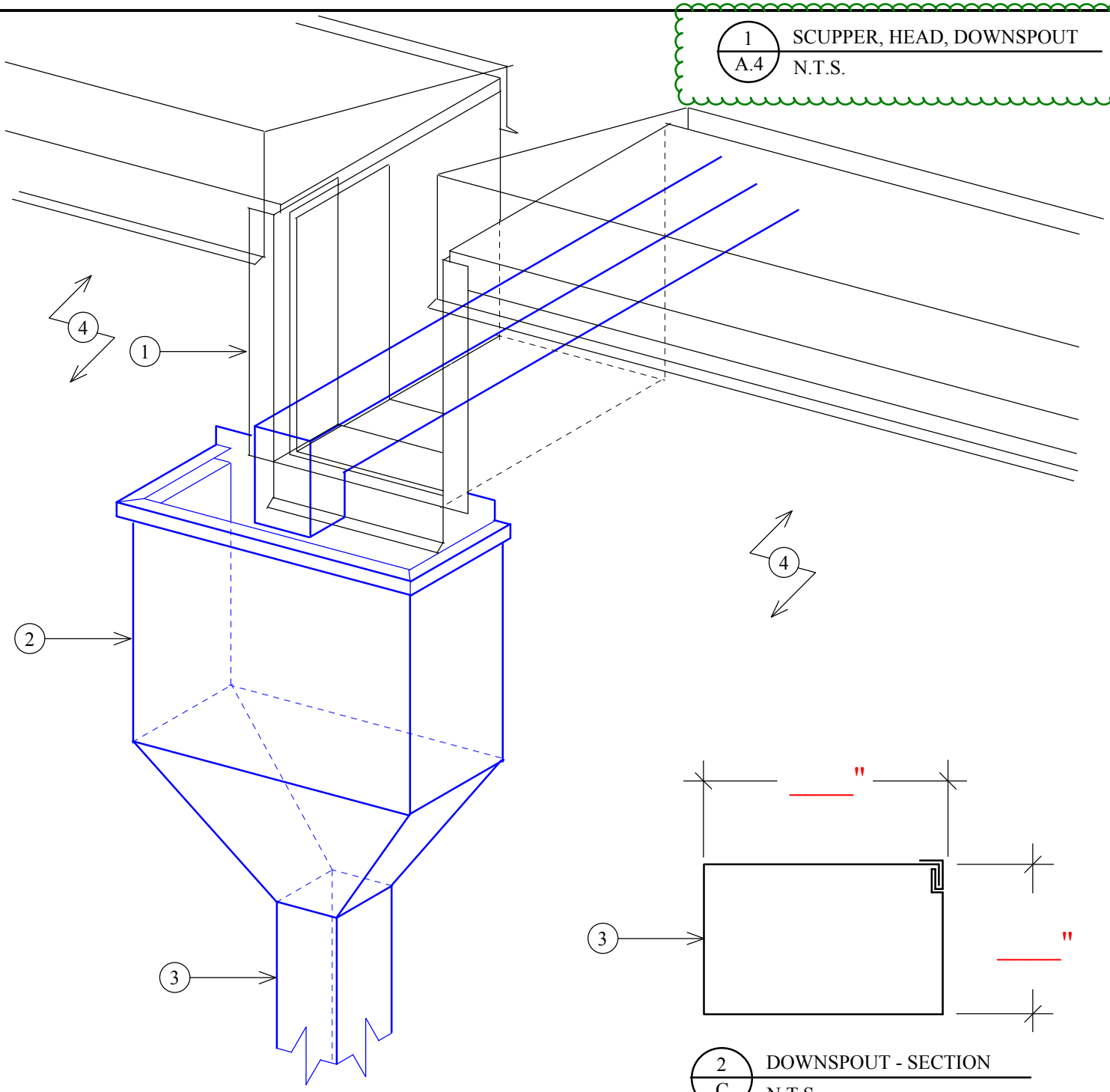

1. SCUPPER FLANGE / TRIM.
2. SCUPPER HEAD.
3. DOWNSPOUT. ARCHITECT TO DETERMINE SIZE.
4. FACADE WALL.

DWG. #: A.4	REF. DWG. # TYPICAL	TITLE: SCUPPER, HEAD, DOWNSPOUT AT WALL GAP
		PROJECT: NEW YORK LIFE
		MATERIAL: 24 GA. PREFINISHED GALVANIZED STEEL
		DATE: 07-01-18
		SCALE: NOT TO SCALE. DIMENSIONS SUBJECT TO FIELD MEASUREMENTS.

Orndorff & Spaid, Inc.
11722 Old Baltimore Pike - Beltsville, Md 20705-1292
Tel: (301)-937-5911 Fax: (301)-937-3918

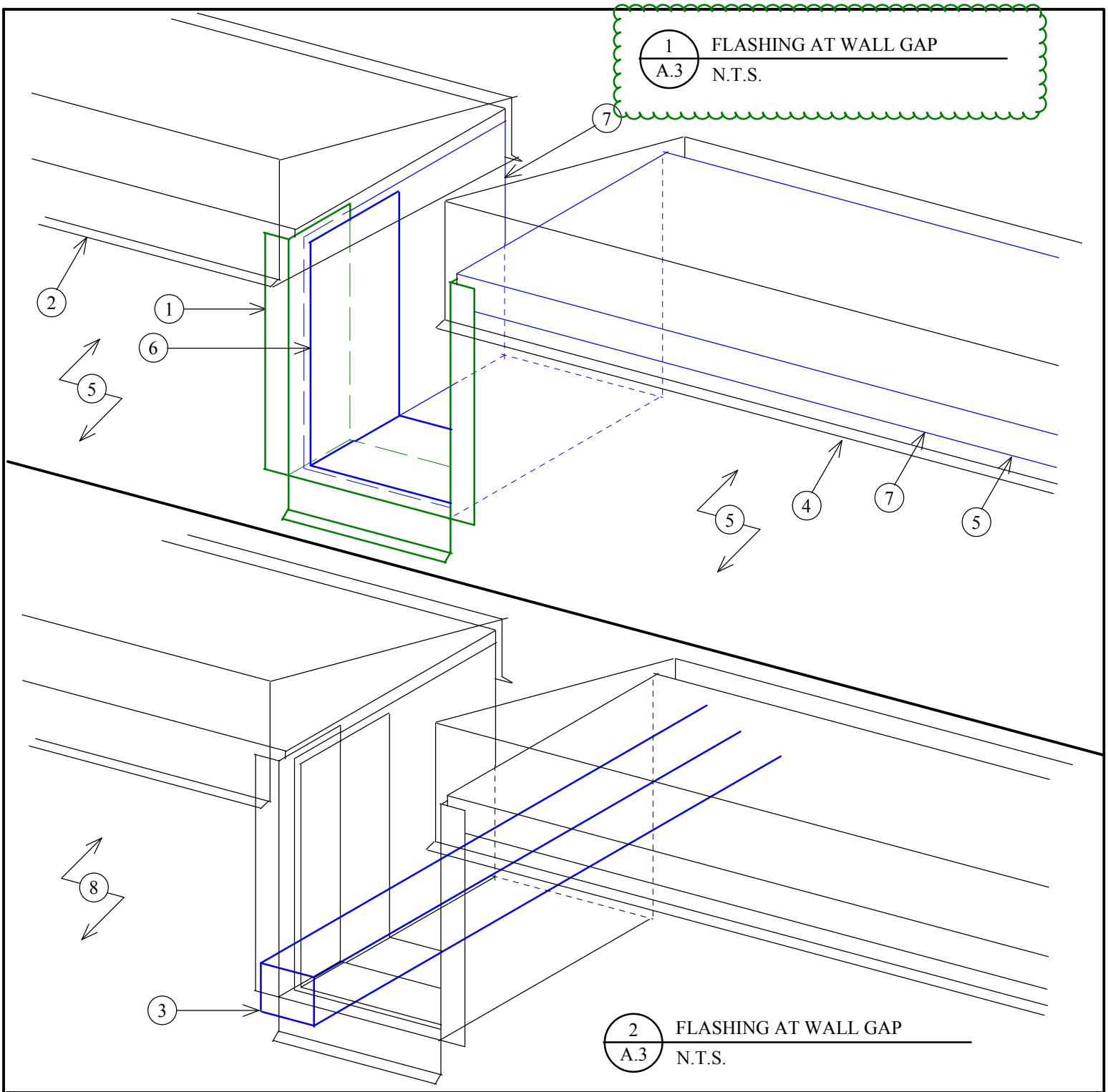

1. SCUPPER FLANGE / TRIM.
2. EXISTING COPING.
3. DOWNSPOUT THRU- WALL GAP.
4. NEW COPING.
5. TPO BASE FLASH. MEMBRANE UP AND OVER PARAPET WALL.
6. TPO FLASHING MEMBRANE.
7. TPO BASE FLASHING.
8. BLDG. FACADE

DWG. #: A.3	REF. DWG. # TYPICAL	TITLE: FLASHING AT GAP IN PARAPET WALL
		PROJECT: RENOVATION AT THE ADMINISTRATION'S PRINCE FREDERICK FACILTIY
		MATERIAL: .032" PREFINISHED ALUMINUM
		DATE: 06-15-2017
		SCALE: NOT TO SCALE. DIMENSIONS SUBJECT TO FIELD MEASUREMENTS.

Orndorff & Spaid, Inc.
11722 Old Baltimore Pike - Beltsville, Md 20705-1292
Tel: (301)-937-5911 Fax: (301)-937-3918

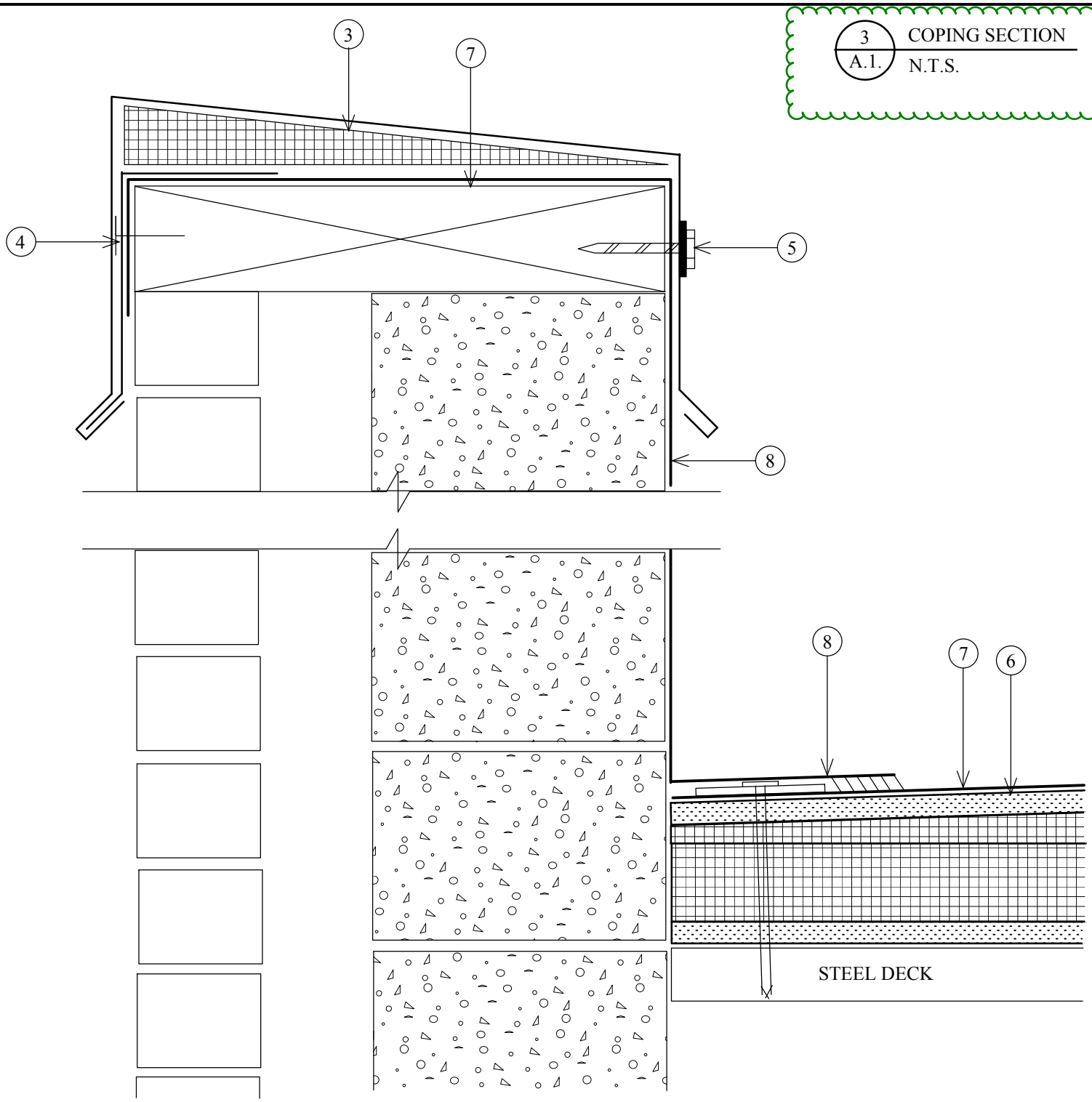

3 A.1. COPING SECTION N.T.S.

NOTES:
1. 6" WIDE COVER PLATES SPACED 10' O.C..
2. SEALANT, TYP..
3. TAPERED INSULATION TO PROVIDE SLOPE.
4. CONTINUOUS CLEAT.
5. FASTENER W/ NEOPRENE WASHER.
6. INSULATION ASSEMBLY.
7. TPO FIELD MEMBRANE.
8. TPO MEMBRANE BASE FLASHING.

DWG. #: A.1.	REF. DWG. # TYPICAL
TITLE: COPING - SINGLE CLEAT, COVER PLATES	
PROJECT: RENOVATION AT THE ADMINISTRATION'S PRINCE FREDERICK FACILTIY	
MATERIAL: .032" PREFINISHED ALUMINUM	
DATE: 06-15-2017	SCALE: NOT TO SCALE DIMENSIONS SUBJECT TO FIELD MEASUREMENTS

Orndorff & Spaid, Inc.
11722 Old Baltimore Pike - Beltsville, Md 20705-1292
Tel: (301)-937-5911 Fax: (301)-937-3918

NOTES:

1. REFER TO FIRESTONE WEBSITE FOR MOST CURRENT INFORMATION.
2. WOOD NAILER MUST BE INSTALLED TO MEET APPLICABLE BUILDING CODES OR 200 PER LINEAR FOOT LBS IN ANY GIVEN DIRECTION.
3. FASTEN COPING CLEAT AS PER SUPPLIED INSTRUCTIONS AND FASTENERS.
4. WHEN REINFORCEMENT OF TPO INSTRUCTIONS. MEMBRANE IS EXPOSED, REFER TO UT-LS-14 FOR CUT EDGE SEALANT APPLICATION.

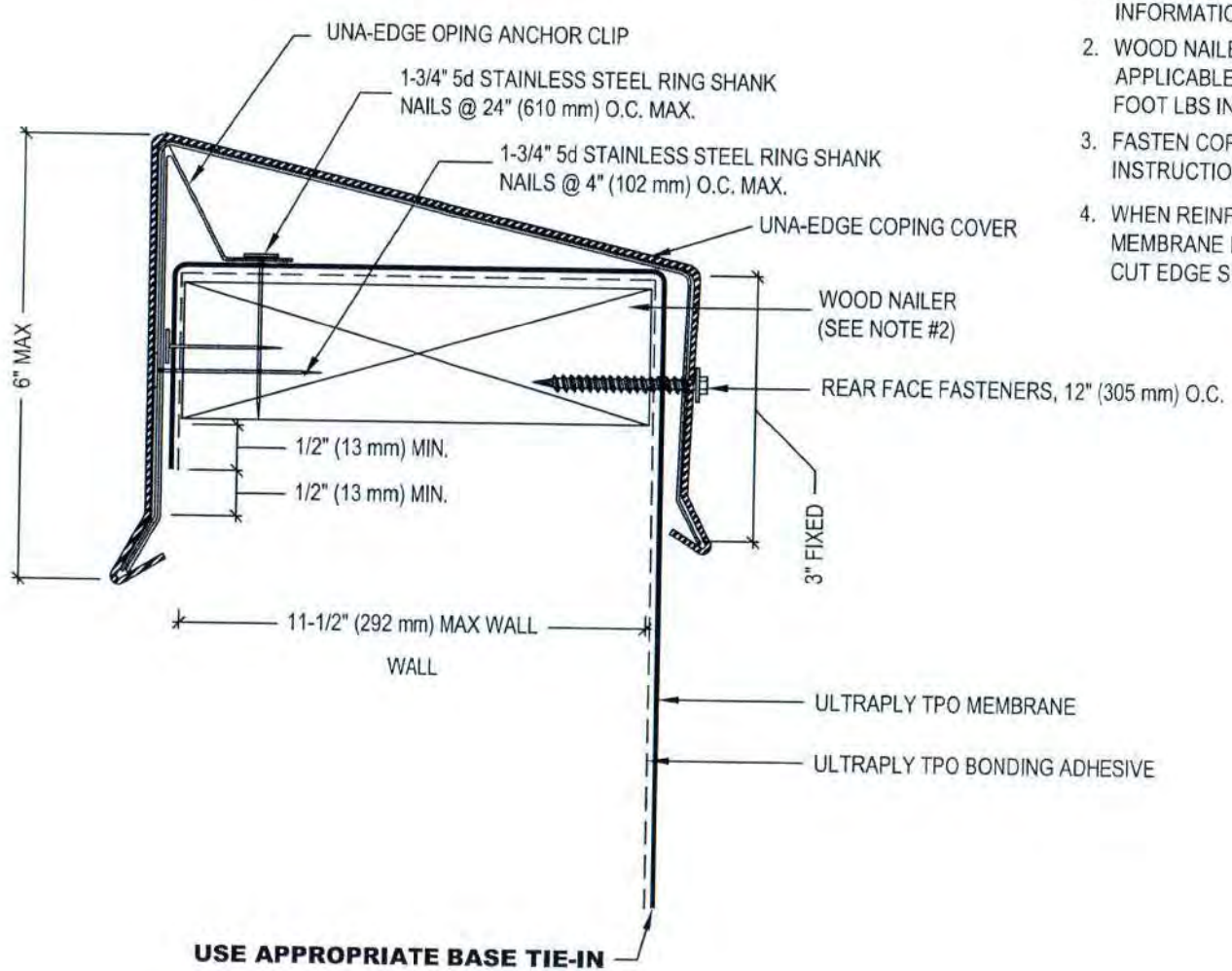

Firestone BUILDING PRODUCTS
NOBODY COVERS YOU BETTER.™
www.firestonebpco.com

TERMINATION AT TOP OF WALL WITH UNA-EDGE COPING

ULTRAPLY™ TPO

ACCEPTABLE SYSTEMS: ALL

MAXIMUM WARRANTY: **20 YEARS**

ISSUE / REVISION DATE: 7/22/2014

NOT TO SCALE

DETAIL NO. UT-T-12A

5D

G

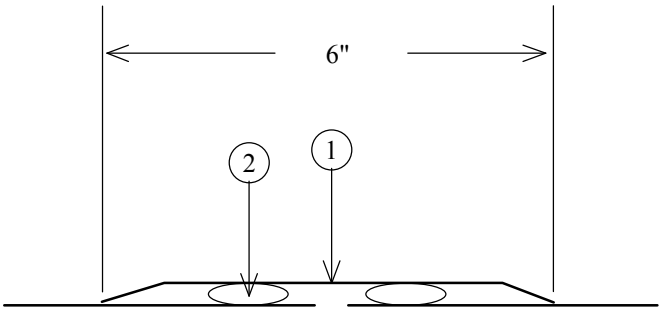

1/A COVER PLATE JOINT DETAIL AA
N.T.S.

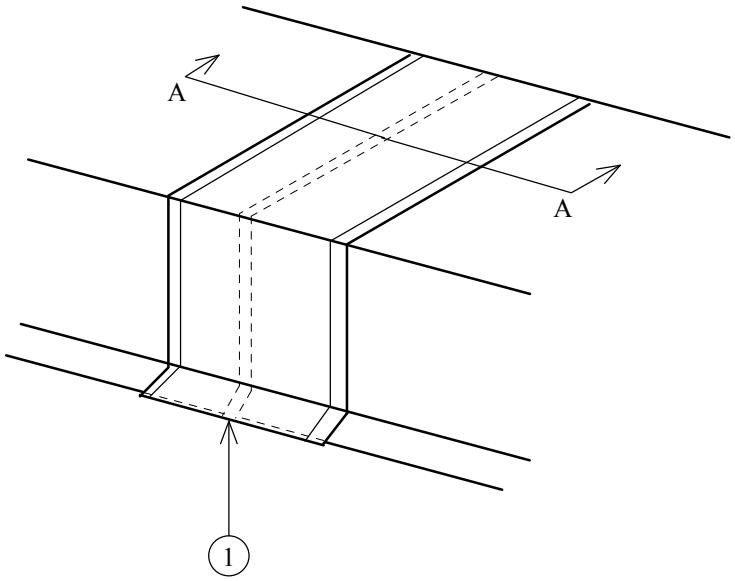

2/A COPING JOINT ISOMETRIC
N.T.S.

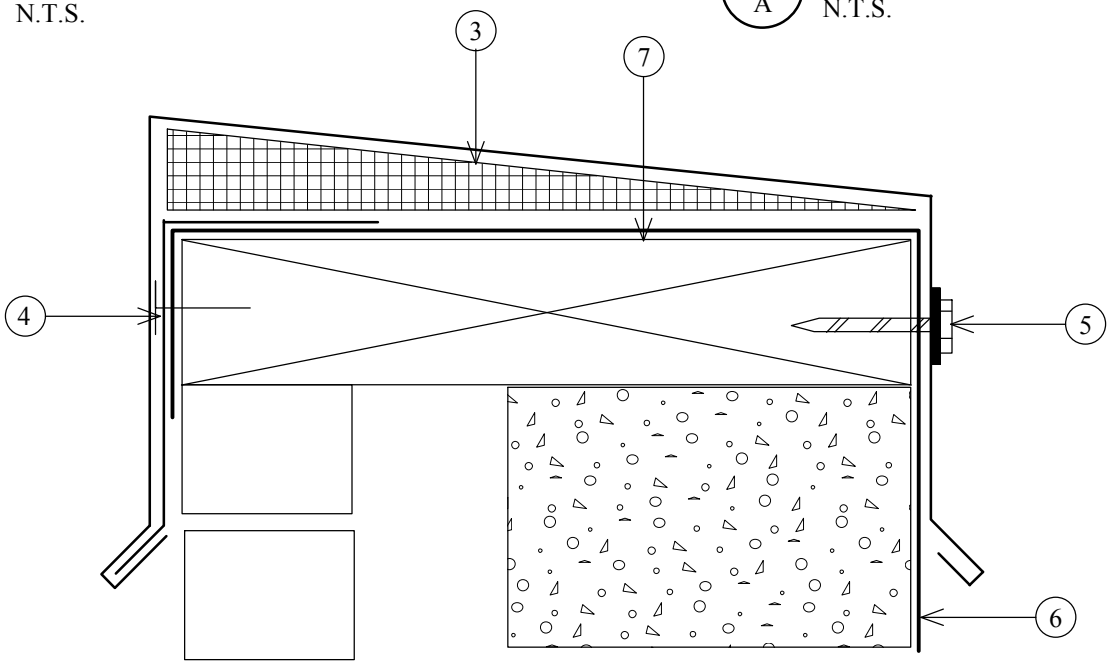

3/A COPING SECTION
N.T.S.

NOTES:
1. 6" WIDE COVER PLATES SPACED 10' O.C..
2. SEALANT, TYP..
3. TAPERED INSULATION TO PROVIDE SLOPE.
4. CONTINUOUS CLEAT.
5. FASTENER W/ NEOPRENE WASHER.
6. TPO MEMBRANE FLASHING.
7. NAILER BY OTHERS.

DWG. #: A	REF. DWG. # TYPICAL
TITLE:	COPING - SINGLE CLEAT, COVER PLATES
PROJECT:	RENOVATION AT THE ADMINISTRATION'S PRINCE FREDERICK FACILTIY
MATERIAL:	.032" PREFINISHED ALUMINUM
DATE: 06-15-2017	SCALE: NOT TO SCALE DIMENSIONS SUBJECT TO FIELD MEASUREMENTS

Orndorff & Spaid, Inc.
11722 Old Baltimore Pike - Beltsville, Md 20705-1292
Tel: (301)-937-5911 Fax: (301)-937-3918

GENERAL NOTES:
1. ARCHITECT TO INDICATE SIZE OF DOWNSPOUT.
2. ARCHITECT TO INDICATE COLOR.

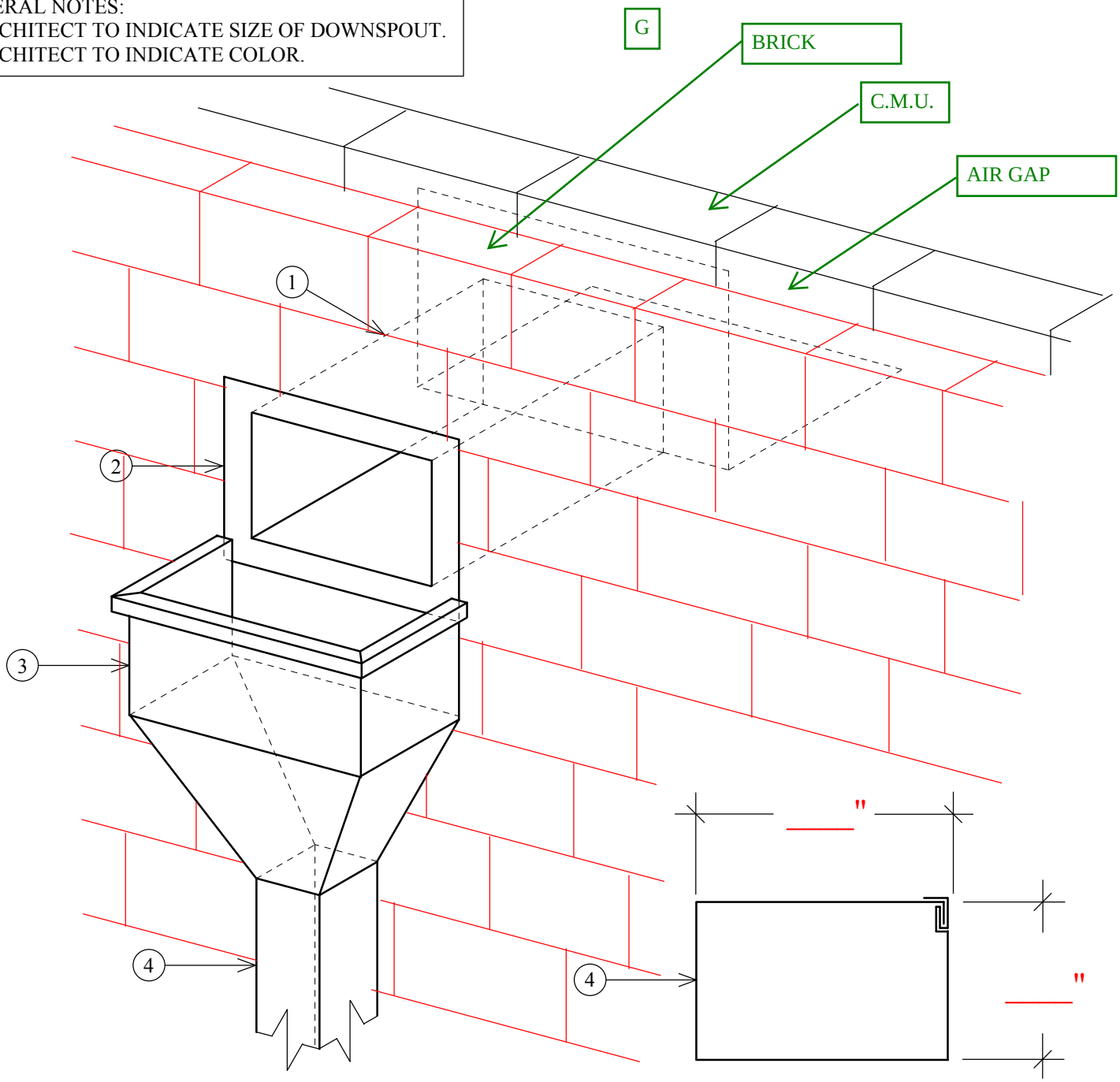

1/B SCUPPER, HEAD, DOWNSPOUT
N.T.S.

2/B DOWNSPOUT - SECTION
N.T.S.

NOTES:
1. TPO COATED METAL SCUPPER.
2. SCUPPER FLANGE.
3. SCUPPER HEAD.
4. DOWNSPOUT. ARCHITECT TO DETERMINE SIZE.

DWG. #: B	REF. DWG. # 4/A-301	TITLE: SCUPPER, HEAD, DOWNSPOUT

Orndorff & Spaid, Inc.
11722 Old Baltimore Pike - Beltsville, Md 20705-1292
Tel: (301)-937-5911 Fax: (301)-937-3918

PROJECT: RENOVATION AT THE ADMINISTRATION'S PRINCE FREDERICK FACILTIY

MATERIAL: .032" PREFINISHED ALUMINUM
TPO COATED STL. SLEEVE

DATE: 06-15-2017

SCALE: NOT TO SCALE.
DIMENSIONS SUBJECT TO FIELD MEASUREMENTS.

Fire Barrier CP 25WB+ Caulk

Sizes to meet all your needs

Get the most versatile firestop caulk on the market. Firestop provides a wide variety of typical pipe and cable penetrations through fire-rated construction. Its versatility simplifies your firestopping needs. 3M™ Fire Barrier CP 25WB+ caulk is a premium elastomeric latex designed for use as a one-part fire, smoke, noxious gas and water sealant. Its unique property allows CP 25WB+ caulk to effectively contain fire and smoke at its origin.

Available in a variety of sizes, CP 25WB+ caulk can be installed with a standard caulking gun, pneumatic pumping equipment or a putty knife or trowel.

3M™ Fire Barrier CP 25WB+ Caulk

10.1-oz. tube

Lightweight, easy to handle. Perfect for smaller jobs. 12 tubes per box.

20-oz. sausage

Less mess. Less waste. Eliminates empty cartridges from the job site. Versatile application gun can be used with other guns including pneumatics. 10 sausages per box.

27-oz. tube

Don't mess with bulk loading. Spend less time reloading tubes on bigger jobs. 6 tubes per box.

2-gallon pail

Lighter and easier to carry around job site. Applies easily with a putty knife or trowel.

5-gallon pail

Great for bulk loading on large jobs. The most cost-effective way to caulk large areas.

Product Features

- Water based for easy cleanup and routine disposal with no special handling
- One-part system—no mixing or measuring
- Intumescent and endothermic properties
- No-sag, non-halogen formula
- Fast drying in just 10-15 minutes
- Paintable
- Documented aging properties

Warranty and Limited Remedy. This product will be free from defects in material and manufacture for a period of ninety (90) days from date of purchase. **3M MAKES NO OTHER WARRANTIES INCLUDING, BUT NOT LIMITED TO, ANY IMPLIED WARRANTY OF MERCHANTABILITY OR FITNESS FOR A PARTICULAR PURPOSE.** User is responsible for determining whether the 3M product is fit for a particular purpose and suitable for user's application. If the 3M product is proved to be defective within the warranty period stated above, your exclusive remedy and 3M's sole obligation shall be, at 3M's option, to replace or repair the 3M product or refund the purchase price of the 3M product.

Limitation of Liability. **Except where prohibited by law, 3M will not be liable for any loss or damage arising from a 3M product, whether direct, indirect, special, incidental or consequential, regardless of the legal theory asserted, including warranty, contract, negligence or strict liability.**

FM APPROVED

Listed OPL ID # 15731•1

3M Consumer Safety and Light Management
3M Center, Building 223-2N-21
St. Paul, MN 55144-1000
Phone: 800-328-1687
www.3M.com/firestop

40% Pre-consumer waste paper
10% Post-consumer waste paper

Printed in U.S.A.

Copyright © 2002, 3M IPC. All rights reserved.

98-0400-4976-3 (1121.3)ii

3M Innovation

Safety Data Sheet

Copyright,2014,3M Company.
All rights reserved. Copying and/or downloading of this information for the purpose of properly utilizing 3M products is allowed provided that: (1) the information is copied in full with no changes unless prior written agreement is obtained from 3M, and (2) neither the copy nor the original is resold or otherwise distributed with the intention of earning a profit thereon.

Document Group:	09-5451-1	**Version Number:**	26.00
Issue Date:	06/20/14	**Supercedes Date:**	08/18/13

SECTION 1: Identification

1.1. Product identifier
3M Brand Fire Barrier CP-25WB+

Product Identification Numbers
42-0016-4710-8, 42-0016-4715-7, 42-0016-4716-5, 98-0400-5380-7, 98-0400-5381-5, 98-0400-5382-3, 98-0400-5383-1, 98-0400-5406-0, 98-0400-5456-5, 98-0400-5562-0, 98-0400-5573-7, 98-0400-5610-7, 98-0400-5629-7

1.2. Recommended use and restrictions on use

Recommended use
Fire Protection, Used as Firestop in buildings.

1.3. Supplier's details

MANUFACTURER:	3M
DIVISION:	Industrial Adhesives and Tapes Division
ADDRESS:	3M Center, St. Paul, MN 55144-1000, USA
Telephone:	1-888-3M HELPS (1-888-364-3577)

1.4. Emergency telephone number
1-800-364-3577 or (651) 737-6501 (24 hours)

SECTION 2: Hazard identification

2.1. Hazard classification
Serious Eye Damage/Irritation: Category 2B.

2.2. Label elements
Signal word
Warning

Symbols
Not applicable

Pictograms
Not applicable

Hazard Statements

Causes eye irritation.

Precautionary Statements
General:
Keep out of reach of children.

Prevention:
Wash thoroughly after handling.

Response:
IF IN EYES: Rinse cautiously with water for several minutes. Remove contact lenses, if present and easy to do. Continue rinsing.
If eye irritation persists: Get medical advice/attention.

2.3. Hazards not otherwise classified
None.

25% of the mixture consists of ingredients of unknown acute dermal toxicity.

SECTION 3: Composition/information on ingredients

Ingredient	C.A.S. No.	% by Wt
Zinc Borate 2335	138265-88-0	10 - 30 Trade Secret *
Polymer (NJTS Reg. No. 04499600-7270)	Trade Secret*	10 - 30 Trade Secret *
Water	7732-18-5	10 - 30 Trade Secret *
Sodium Silicate	1344-09-8	10 - 30 Trade Secret *
Ethylhexyldiphenyl phosphate	1241-94-7	3 - 7 Trade Secret *
Oxide glass chemicals	65997-17-3	1 - 5 Trade Secret *
Iron oxide	1309-37-1	1 - 5 Trade Secret *
Polyethylene Glycol	25322-68-3	1 - 5 Trade Secret *
Triphenyl phosphate	115-86-6	< 1.0 Trade Secret *
Di-2-ethylhexlphenyl phosphate	16368-97-1	< 1.0 Trade Secret *
Polyoxyethylene monooctylphenyl ether	9036-19-5	< 1.0 Trade Secret *
3(2H)-Isothiazolone, 5-chloro-2-methyl-, mixt. with 2-methyl-3(2H)-isothiazolone	55965-84-9	< 0.001 Trade Secret *

NJTS or NJTSRN: New Jersey Trade Secret Registry Number.

*The specific chemical identity and/or exact percentage (concentration) of this composition has been withheld as a trade secret.

SECTION 4: First aid measures

4.1. Description of first aid measures

Inhalation:
Remove person to fresh air. If you feel unwell, get medical attention.

Skin Contact:
Wash with soap and water. If signs/symptoms develop, get medical attention.

Eye Contact:
Flush with large amounts of water. Remove contact lenses if easy to do. Continue rinsing. If signs/symptoms persist, get medical attention.

If Swallowed:
Rinse mouth. If you feel unwell, get medical attention.

4.2. Most important symptoms and effects, both acute and delayed
See Section 11.1. Information on toxicological effects.

4.3. Indication of any immediate medical attention and special treatment required
Not applicable

SECTION 5: Fire-fighting measures

5.1. Suitable extinguishing media
Non-combustible. Use a fire fighting agent suitable for surrounding fire.

5.2. Special hazards arising from the substance or mixture
None inherent in this product.

5.3. Special protective actions for fire-fighters
No special protective actions for fire-fighters are anticipated.

SECTION 6: Accidental release measures

6.1. Personal precautions, protective equipment and emergency procedures
Evacuate area. Ventilate the area with fresh air. Refer to other sections of this SDS for information regarding physical and health hazards, respiratory protection, ventilation, and personal protective equipment.

6.2. Environmental precautions
Avoid release to the environment.

6.3. Methods and material for containment and cleaning up
Collect as much of the spilled material as possible. Place in a closed container approved for transportation by appropriate authorities. Clean up residue. Seal the container. Dispose of collected material as soon as possible.

SECTION 7: Handling and storage

7.1. Precautions for safe handling
Avoid eye contact. Keep out of reach of children. Avoid breathing dust/fume/gas/mist/vapors/spray. Do not eat, drink or smoke when using this product. Wash thoroughly after handling. Avoid release to the environment.

7.2. Conditions for safe storage including any incompatibilities
Keep cool. Store away from heat. Store away from areas where product may come into contact with food or pharmaceuticals. Store in a dry place.

SECTION 8: Exposure controls/personal protection

8.1. Control parameters

Occupational exposure limits

Ingredient	C.A.S. No.	Agency	Limit type	Additional Comments
Triphenyl phosphate	115-86-6	ACGIH	TWA:3 mg/m3	
Triphenyl phosphate	115-86-6	OSHA	TWA:3 mg/m3	

Iron oxide	1309-37-1	ACGIH	TWA(respirable fraction):5 mg/m3	
Iron oxide	1309-37-1	OSHA	TWA(as fume):10 mg/m3	
ROUGE	1309-37-1	OSHA	TWA(as total dust):15 mg/m3;TWA(respirable fraction):5 mg/m3	
Polyethylene Glycol	25322-68-3	AIHA	TWA(as particulate):10 mg/m3	
Oxide glass chemicals	65997-17-3	Manufacturer determined	TWA(as dust):10 mg/m3	

ACGIH : American Conference of Governmental Industrial Hygienists
AIHA : American Industrial Hygiene Association
CMRG : Chemical Manufacturer's Recommended Guidelines
OSHA : United States Department of Labor - Occupational Safety and Health Administration
TWA: Time-Weighted-Average
STEL: Short Term Exposure Limit
CEIL: Ceiling

8.2. Exposure controls

8.2.1. Engineering controls
Use general dilution ventilation and/or local exhaust ventilation to control airborne exposures to below relevant Exposure Limits and/or control dust/fume/gas/mist/vapors/spray. If ventilation is not adequate, use respiratory protection equipment.

8.2.2. Personal protective equipment (PPE)

Eye/face protection

Select and use eye/face protection to prevent contact based on the results of an exposure assessment. The following eye/face protection(s) are recommended:
Indirect Vented Goggles

Skin/hand protection
Select and use gloves and/or protective clothing approved to relevant local standards to prevent skin contact based on the results of an exposure assessment. Selection should be based on use factors such as exposure levels, concentration of the substance or mixture, frequency and duration, physical challenges such as temperature extremes, and other use conditions. Consult with your glove and/or protective clothing manufacturer for selection of appropriate compatible gloves/protective clothing.
Gloves made from the following material(s) are recommended: Butyl Rubber
Neoprene
Nitrile Rubber

Respiratory protection

An exposure assessment may be needed to decide if a respirator is required. If a respirator is needed, use respirators as part of a full respiratory protection program. Based on the results of the exposure assessment, select from the following respirator type(s) to reduce inhalation exposure:
Half facepiece or full facepiece air-purifying respirator suitable for particulates

For questions about suitability for a specific application, consult with your respirator manufacturer.

SECTION 9: Physical and chemical properties

9.1. Information on basic physical and chemical properties

General Physical Form:	Solid
Specific Physical Form:	Paste
Odor, Color, Grade:	Red with negligible odor

Odor threshold	*No Data Available*
Melting point	*No Data Available*
Flash Point	No flash point
Flammability (solid, gas)	Not Classified
Flammable Limits(LEL)	*Not Applicable*
Flammable Limits(UEL)	*Not Applicable*
Specific Gravity	1.35 [*Ref Std:* WATER=1]
Solubility in Water	Complete
Solubility- non-water	*No Data Available*
Autoignition temperature	*Not Applicable*
Decomposition temperature	*No Data Available*
Volatile Organic Compounds	< 1 g/l
VOC Less H2O & Exempt Solvents	< 1 g/l

SECTION 10: Stability and reactivity

10.1. Reactivity
This material is considered to be non reactive under normal use conditions.

10.2. Chemical stability
Stable.

10.3. Possibility of hazardous reactions
Hazardous polymerization will not occur.

10.4. Conditions to avoid
None known.

10.5. Incompatible materials
None known.

10.6. Hazardous decomposition products

Substance	Condition
Carbon monoxide	Not Specified
Carbon dioxide	Not Specified
Oxides of Phosphorus	Not Specified

SECTION 11: Toxicological information

The information below may not be consistent with the material classification in Section 2 if specific ingredient

classifications are mandated by a competent authority. In addition, toxicological data on ingredients may not be reflected in the material classification and/or the signs and symptoms of exposure, because an ingredient may be present below the threshold for labeling, an ingredient may not be available for exposure, or the data may not be relevant to the material as a whole.

11.1. Information on Toxicological effects

Signs and Symptoms of Exposure

Based on test data and/or information on the components, this material may produce the following health effects:

Inhalation:
Respiratory Tract Irritation: Signs/symptoms may include cough, sneezing, nasal discharge, headache, hoarseness, and nose and throat pain.

Skin Contact:
Mild Skin Irritation: Signs/symptoms may include localized redness, swelling, itching, and dryness.

Eye Contact:
Moderate Eye Irritation: Signs/symptoms may include redness, swelling, pain, tearing, and blurred or hazy vision.

Ingestion:
May be harmful if swallowed.
Gastrointestinal Irritation: Signs/symptoms may include abdominal pain, stomach upset, nausea, vomiting and diarrhea.

Toxicological Data
If a component is disclosed in section 3 but does not appear in a table below, either no data are available for that endpoint or the data are not sufficient for classification.

Acute Toxicity

Name	Route	Species	Value
Overall product	Dermal		No data available; calculated ATE > 5,000 mg/kg
Overall product	Ingestion		No data available; calculated ATE 2,000 - 5,000 mg/kg
Polymer (NJTS Reg. No. 04499600-7270)	Ingestion	Rat	LD50 > 2,000 mg/kg
Zinc Borate 2335	Dermal	Rabbit	LD50 > 10,000 mg/kg
Zinc Borate 2335	Ingestion	Rat	LD50 > 10,000 mg/kg
Sodium Silicate	Dermal	Rabbit	LD50 > 4,640 mg/kg
Sodium Silicate	Ingestion	Rat	LD50 500 mg/kg
Ethylhexyldiphenyl phosphate	Dermal	Rabbit	LD50 > 7,940 mg/kg
Ethylhexyldiphenyl phosphate	Ingestion	Rat	LD50 > 24,000 mg/kg
Iron oxide	Dermal	Not available	LD50 3,100 mg/kg
Iron oxide	Ingestion	Not available	LD50 3,700 mg/kg
Polyethylene Glycol	Dermal	Rabbit	LD50 > 20,000 mg/kg
Polyethylene Glycol	Ingestion	Rat	LD50 32,770 mg/kg
Oxide glass chemicals	Dermal		LD50 estimated to be > 5,000 mg/kg
Oxide glass chemicals	Ingestion		LD50 estimated to be 2,000 - 5,000 mg/kg
Polyoxyethylene monooctylphenyl ether	Dermal	Rabbit	LD50 > 3,000 mg/kg
Polyoxyethylene monooctylphenyl ether	Ingestion	Rat	LD50 > 500 mg/kg
Triphenyl phosphate	Dermal	Rabbit	LD50 > 7,900 mg/kg
Triphenyl phosphate	Inhalation-Dust/Mist (4 hours)	Rat	LC50 > 50 mg/l
Triphenyl phosphate	Ingestion	Rat	LD50 > 3,000 mg/kg
3(2H)-Isothiazolone, 5-chloro-2-methyl-, mixt. with 2-methyl-3(2H)-isothiazolone	Dermal	Rabbit	LD50 87 mg/kg
3(2H)-Isothiazolone, 5-chloro-2-methyl-, mixt. with 2-methyl-3(2H)-isothiazolone	Inhalation-Dust/Mist (4 hours)	Rat	LC50 0.33 mg/l

3(2H)-Isothiazolone, 5-chloro-2-methyl-, mixt. with 2-methyl-3(2H)-isothiazolone	Ingestion	Rat	LD50 40 mg/kg

ATE = acute toxicity estimate

Skin Corrosion/Irritation

Name	Species	Value
Polymer (NJTS Reg. No. 04499600-7270)	Rabbit	Minimal irritation
Sodium Silicate	Rabbit	Corrosive
Iron oxide	Rabbit	No significant irritation
Polyethylene Glycol	Rabbit	Minimal irritation
Oxide glass chemicals		No significant irritation
3(2H)-Isothiazolone, 5-chloro-2-methyl-, mixt. with 2-methyl-3(2H)-isothiazolone	Rabbit	Corrosive

Serious Eye Damage/Irritation

Name	Species	Value
Polymer (NJTS Reg. No. 04499600-7270)		Mild irritant
Sodium Silicate	Rabbit	Corrosive
Iron oxide	Rabbit	No significant irritation
Polyethylene Glycol	Rabbit	Mild irritant
Oxide glass chemicals		No significant irritation
3(2H)-Isothiazolone, 5-chloro-2-methyl-, mixt. with 2-methyl-3(2H)-isothiazolone	Rabbit	Corrosive

Skin Sensitization

Name	Species	Value
Sodium Silicate	Mouse	Not sensitizing
Iron oxide	Human	Some positive data exist, but the data are not sufficient for classification
Polyethylene Glycol	Guinea pig	Not sensitizing
3(2H)-Isothiazolone, 5-chloro-2-methyl-, mixt. with 2-methyl-3(2H)-isothiazolone	Human and animal	Sensitizing

Photosensitization

Name	Species	Value
3(2H)-Isothiazolone, 5-chloro-2-methyl-, mixt. with 2-methyl-3(2H)-isothiazolone	Human and animal	Not sensitizing

Respiratory Sensitization

Name	Species	Value

Germ Cell Mutagenicity

Name	Route	Value
Sodium Silicate	In Vitro	Not mutagenic
Sodium Silicate	In vivo	Not mutagenic
Iron oxide	In Vitro	Not mutagenic
Polyethylene Glycol	In Vitro	Not mutagenic
Polyethylene Glycol	In vivo	Not mutagenic
Oxide glass chemicals	In Vitro	Some positive data exist, but the data are not sufficient for classification
3(2H)-Isothiazolone, 5-chloro-2-methyl-, mixt. with 2-methyl-3(2H)-isothiazolone	In vivo	Not mutagenic
3(2H)-Isothiazolone, 5-chloro-2-methyl-, mixt. with 2-methyl-3(2H)-isothiazolone	In Vitro	Some positive data exist, but the data are not sufficient for classification

Carcinogenicity

Name	Route	Species	Value
Iron oxide	Inhalation	Human	Some positive data exist, but the data are not

			sufficient for classification
Polyethylene Glycol	Ingestion	Rat	Not carcinogenic
Oxide glass chemicals	Inhalation	Multiple animal species	Some positive data exist, but the data are not sufficient for classification
3(2H)-Isothiazolone, 5-chloro-2-methyl-, mixt. with 2-methyl-3(2H)-isothiazolone	Dermal	Mouse	Not carcinogenic
3(2H)-Isothiazolone, 5-chloro-2-methyl-, mixt. with 2-methyl-3(2H)-isothiazolone	Ingestion	Rat	Not carcinogenic

Reproductive Toxicity

Reproductive and/or Developmental Effects

Name	Route	Value	Species	Test Result	Exposure Duration
Sodium Silicate	Ingestion	Some positive developmental data exist, but the data are not sufficient for classification	Mouse	NOAEL 200 mg/kg/day	during gestation
Polyethylene Glycol	Ingestion	Not toxic to female reproduction	Rat	NOAEL 1,125 mg/kg/day	during gestation
Polyethylene Glycol	Ingestion	Not toxic to male reproduction	Rat	NOAEL 5699 +/- 1341 mg/kg/day	5 days
Polyethylene Glycol	Not Specified	Some positive reproductive/developmental data exist, but the data are not sufficient for classification		NOEL N/A	
Polyethylene Glycol	Ingestion	Some positive developmental data exist, but the data are not sufficient for classification	Mouse	NOAEL 562 mg/animal/day	during gestation
3(2H)-Isothiazolone, 5-chloro-2-methyl-, mixt. with 2-methyl-3(2H)-isothiazolone	Ingestion	Not toxic to female reproduction	Rat	NOAEL 10 mg/kg/day	2 generation
3(2H)-Isothiazolone, 5-chloro-2-methyl-, mixt. with 2-methyl-3(2H)-isothiazolone	Ingestion	Not toxic to male reproduction	Rat	NOAEL 10 mg/kg/day	2 generation
3(2H)-Isothiazolone, 5-chloro-2-methyl-, mixt. with 2-methyl-3(2H)-isothiazolone	Ingestion	Not toxic to development	Rat	NOAEL 15 mg/kg/day	during organogenesis

Target Organ(s)

Specific Target Organ Toxicity - single exposure

Name	Route	Target Organ(s)	Value	Species	Test Result	Exposure Duration
Sodium Silicate	Inhalation	respiratory irritation	May cause respiratory irritation	official classification	NOAEL Not available	
Polyethylene Glycol	Inhalation	respiratory irritation	Some positive data exist, but the data are not sufficient for classification	Rat	NOAEL 1.008 mg/l	2 weeks
3(2H)-Isothiazolone, 5-chloro-2-methyl-, mixt. with 2-methyl-3(2H)-isothiazolone	Inhalation	respiratory irritation	Some positive data exist, but the data are not sufficient for classification	similar health hazards	NOAEL Not available	

Specific Target Organ Toxicity - repeated exposure

Name	Route	Target Organ(s)	Value	Species	Test Result	Exposure Duration
Sodium Silicate	Ingestion	kidney and/or bladder	Some positive data exist, but the data are not sufficient for classification	Dog	LOAEL 2,400 mg/kg/day	4 weeks
Sodium Silicate	Ingestion	endocrine system	Some positive data exist, but the data are not sufficient for classification	Rat	NOAEL 804 mg/kg/day	3 months
Sodium Silicate	Ingestion	blood	All data are negative	Rat	NOAEL 804	3 months

					mg/kg/day	
Sodium Silicate	Ingestion	heart | liver	All data are negative	Rat	NOAEL 1,259 mg/kg/day	8 weeks
Iron oxide	Inhalation	pulmonary fibrosis | pneumoconiosis	Some positive data exist, but the data are not sufficient for classification	Human	NOAEL Not available	occupational exposure
Polyethylene Glycol	Inhalation	respiratory system	Some positive data exist, but the data are not sufficient for classification	Rat	NOAEL 1.008 mg/l	2 weeks
Polyethylene Glycol	Ingestion	kidney and/or bladder	Some positive data exist, but the data are not sufficient for classification	Rat	NOAEL 5,640 mg/kg/day	13 weeks
Polyethylene Glycol	Ingestion	heart | endocrine system | hematopoietic system | liver | nervous system	All data are negative	Rat	NOAEL 5,640 mg/kg/day	13 weeks
Oxide glass chemicals	Inhalation	respiratory system	Some positive data exist, but the data are not sufficient for classification	Human	NOAEL not available	occupational exposure

Aspiration Hazard

Name	Value

Please contact the address or phone number listed on the first page of the SDS for additional toxicological information on this material and/or its components.

SECTION 12: Ecological information

Ecotoxicological information

Test Organism	Test Type	Result
Water flea, Daphnia magna	48 hours Aquatic Toxicity - Acute	27 mg/l
Green algae, Pseudokirchneriella subcapitata	72 hours Aquatic Toxicity - Chronic	2.6 mg/l

Please contact the address or phone number listed on the first page of the SDS for additional ecotoxicological information on this material and/or its components.

Chemical fate information

Please contact the address or phone number listed on the first page of the SDS for additional chemical fate information on this material and/or its components.

SECTION 13: Disposal considerations

13.1. Disposal methods

Dispose of contents/ container in accordance with the local/regional/national/international regulations.

Dispose of waste product in a permitted industrial waste facility. As a disposal alternative, incinerate in a permitted waste incineration facility. Proper destruction may require the use of additional fuel during incineration processes. Empty drums/barrels/containers used for transporting and handling hazardous chemicals (chemical substances/mixtures/preparations classified as Hazardous as per applicable regulations) shall be considered, stored, treated & disposed of as hazardous wastes unless otherwise defined by applicable waste regulations. Consult with the respective regulating authorities to determine the available treatment and disposal facilities.

EPA Hazardous Waste Number (RCRA): Not regulated

SECTION 14: Transport Information

For Transport Information, please visit **http://3M.com/Transportinfo** or call 1-800-364-3577 or 651-737-6501.

SECTION 15: Regulatory information

15.1. US Federal Regulations

Contact 3M for more information.

311/312 Hazard Categories:

Fire Hazard - No Pressure Hazard - No Reactivity Hazard - No Immediate Hazard - Yes Delayed Hazard - No

Section 313 Toxic Chemicals subject to the reporting requirements of that section and 40 CFR part 372 (EPCRA):

Ingredient	C.A.S. No	% by Wt
Zinc Borate 2335 (ZINC COMPOUNDS)	138265-88-0	10 - 30

15.2. State Regulations

15.3. Chemical Inventories

The components of this material are in compliance with the provisions of Australia National Industrial Chemical Notification and Assessment Scheme (NICNAS). Certain restrictions may apply. Contact the selling division for additional information.

The components of this product are in compliance with the new substance notification requirements of CEPA.

The components of this material are in compliance with the China "Measures on Environmental Management of New Chemical Substance". Certain restrictions may apply. Contact the selling division for additional information.

The components of this material are in compliance with the provisions of the Korean Toxic Chemical Control Law. Certain restrictions may apply. Contact the selling division for additional information.

The components of this product are in compliance with the chemical notification requirements of TSCA.

15.4. International Regulations

This SDS has been prepared to meet the U.S. OSHA Hazard Communication Standard, 29 CFR 1910.1200.

SECTION 16: Other information

NFPA Hazard Classification
Health: 1 **Flammability:** 1 **Instability:** 0 **Special Hazards:** None

National Fire Protection Association (NFPA) hazard ratings are designed for use by emergency response personnel to address the hazards that are presented by short-term, acute exposure to a material under conditions of fire, spill, or similar emergencies. Hazard ratings are primarily based on the inherent physical and toxic properties of the material but also include the toxic properties of combustion or decomposition products that are known to be generated in significant quantities.

HMIS Hazard Classification

Health: 2 **Flammability:** 1 **Physical Hazard:** 0 **Personal Protection:** X - See PPE section.

Hazardous Material Identification System (HMIS® III) hazard ratings are designed to inform employees of chemical hazards in the workplace. These ratings are based on the inherent properties of the material under expected conditions of normal use and are not intended for use in emergency situations. HMIS® III ratings are to be used with a fully implemented HMIS® III program. HMIS® is a registered mark of the American Coatings Association (ACA).

Document Group:	09-5451-1	**Version Number:**	26.00
Issue Date:	06/20/14	**Supercedes Date:**	08/18/13

DISCLAIMER: The information in this Safety Data Sheet (SDS) is believed to be correct as of the date issued. 3M MAKES NO WARRANTIES, EXPRESSED OR IMPLIED, INCLUDING, BUT NOT LIMITED TO, ANY IMPLIED WARRANTY OF MERCHANTABILITY OR FITNESS FOR A PARTICULAR PURPOSE OR COURSE OF PERFORMANCE OR USAGE OF TRADE. User is responsible for determining whether the 3M product is fit for a particular purpose and suitable for user's method of use or application. Given the variety of factors that can affect the use and application of a 3M product, some of which are uniquely within the user's knowledge and control, it is essential that the user evaluate the 3M product to determine whether it is fit for a particular purpose and suitable for user's method of use or application.

3M provides information in electronic form as a service to its customers. Due to the remote possibility that electronic transfer may have resulted in errors, omissions or alterations in this information, 3M makes no representations as to its completeness or accuracy. In addition, information obtained from a database may not be as current as the information in the SDS available directly from 3M

3M USA SDSs are available at www.3M.com

3M™ Fire Barrier Sealant IC 15WB+

Product Data Sheet

FIRE BARRIER
UP TO 3 HOUR Fire Protection

SMOKE SEAL
L RATED Meets Optional L Requirements

SOUND BARRIER
STC 54 In STC 54-rated wall assembly

CLASSIFIED UL

FILL, VOID, OR CAVITY
FOR USE IN JOINT SYSTEMS,
THROUGH-PENETRATION FIRESTOP SYSTEMS
AND PERIMETER CONTAINMENT SYSTEMS
SEE UL FIRE RESISTANCE DIRECTORY
90G9

ULC LISTED
FILL, VOID OR CAVITY MATERIALS
90G9

LISTED C US Intertek
FIRESTOP SYSTEMS
SEE INTERTEK DIRECTORY

1. Product Description

3M™ Fire Barrier Sealant IC 15WB+ is a cost-effective, one-part, gun-grade, latex-based, intumescent firestop sealant that dries to form a monolithic firestop seal that also acts as a barrier to airborne sound transmission. 3M™ Fire Barrier Sealant IC 15WB+ firestops through penetrations passing through fire-rated floor, floor/ceiling or wall assemblies, as well as other fire-rated interior building partitions and assemblies (e.g. static construction joints or blank openings). In addition, the unique intumescent property of this material allows 3M™ Fire Barrier Sealant IC 15WB+ to expand and help maintain a firestop penetration seal for up to 3 hours as penetrants are exposed to fire. 3M™ Fire Barrier Sealant IC 15WB+ bonds to most construction substrates, including: gypsum wallboard, concrete, metals, wood, plastic (including CPVC) and cable jacketing. No mixing is required.

FBC SYSTEM COMPATIBLE

Cost-effective firestop sealant available in tube, pail or sausage.

Product Color: Yellow.

Product Features

- Firestop tested up to 3 hours in accordance with ASTM E 814 (UL 1479), ASTM E 1966 (UL 2079) & CAN/ULC-S115
- CPVC compatible
- Expanded fire protection systems
- Helps minimize sound transfer*
- Sag-resistant
- Halogen-free
- Excellent adhesion
- Re-enterable/repairable
- Excellent caulk rate
- Paintable
- Water clean up

Complies with the intent of LEED® NC-EQ Credit 4.1 for Low-Emitting Materials: Adhesives and Sealants, contains <250 g/L VOC contents (less H_2O and exempt solvents per SCAQMD Rule 1168).

**Minimizes noise transfer—STC-Rating of 54 when tested in STC 54-rated wall assembly.*

2. Applications

3M™ Fire Barrier Sealant IC 15WB+ is a general-purpose intumescent firestop ideal for sealing single or multiple through penetrations in fire-rated construction. 3M™ Fire Barrier Sealant IC 15WB+ is typically used in mechanical, electrical and plumbing applications to firestop openings created by the following penetrations in fire-rated floors, floor/ceilings or walls: metallic pipe, plastic pipe, conduit, power and communication cable, cable trays, busways, combos, insulated pipe and HVAC duct penetrations. 3M™ Fire Barrier Sealant IC 15WB+ is also used to firestop blank openings and static construction joints.

3. Specifications

3M™ Fire Barrier Sealant IC 15WB+ shall be a one component, ready-to-use, gun-grade, latex-based, intumescent firestop sealant capable of expanding a minimum of 3 times at 1000°F. The material shall be thixotropic and be applicable to overhead, vertical and horizontal firestops. The sealant shall be listed by independent test agencies such as UL, ULC, Intertek or FM. 3M™ Fire Barrier Sealant IC 15WB+ shall be tested to and pass the criteria of ASTM E 814 (UL 1479) Standard Test Method for Fire Tests of Penetration Firestop Systems, ASTM E 1966 (UL 2079) Standard Test Method for Fire Resistive Joint Systems and CAN/ULC-S115 Standard Method of Fire Tests of Firestop Systems. 3M™ Fire Barrier Sealant IC 15WB+ meets the requirements of the IBC, IRC, NBCC, IFC, IPC, IMC, NFPA 5000, NEC (NFPA 70) and NFPA 101.

Typically Specified MasterFormat (2004)
Section 07 84 00 – Firestopping

Related Sections
Section 07 27 00 – Air Barriers
Section 07 84 16 – Annular Space Protection
Section 07 84 43 – Fire-Resistant Joint Sealants
Section 07 86 00 – Smoke Seals
Section 07 87 00 – Smoke Containment Barriers
Section 07 92 13 – Elastomeric Joint Sealants
Section 07 92 19 – Acoustical Joint Sealants
Section 21 00 00 – Fire Suppression
Section 22 00 00 – Plumbing
Section 23 00 00 – Heating, Ventilating, and Air Conditioning (HVAC)
Section 26 00 00 – Electrical

For technical support relating to 3M Fire Protection Products and Systems, call: 1-800-328-1687
For more information on 3M Fire Protection Products, visit: www.3m.com/firestop

4. Performance & Typical Physical Properties

Color:	Yellow
Application Temperature Range: (ASTM C 1299)	40° to 122°F (4° to 50°C)
Service Temperature Range:	-20° to 180°F (-28° to 82°C)
STC Acoustic Barrier: (ASTM E 90 and ASTM E 413)	54 when tested in STC 54 rated wall assembly

Surface Burning (ASTM E 84)**:** Flame Spread 5, Smoke Development 50

Hardness (ASTM D 2240 Shore A)**:**	70
Tensile Strength:	85 psi (0.59 MPa)
Volume Shrinkage (ASTM C 1241)**:**	28%
VOC Less H_2O and Exempt Solvents:	<250 g/L

Dry: Under typical conditions of 75°F (23°C) and 50% R.H., sealant becomes tack-free in about ten minutes and dry-to-touch in 30 to 60 minutes. Full dry depends upon ambient conditions and volume of sealant. Typical dry rate is approximately 1/8 inch (3 mm) per day.

Unit Volume: 10.1 fl. oz tube (298.7 ml, 18.2 $in.^3$), 20 fl. oz. sausage (591.5 ml, 36.1 $in.^3$), 27 fl. oz tube (798.5 ml, 48.7 $in.^3$), 4.5 gal. pail (17.03 L, 1039.5 $in.^3$)

5. Packaging, Storage, Shelf Life

Packaging Product packaged in cartridge or pail is enclosed in HDPE plastic containers, sausage is packaged in aluminum foil wrap.

Storage 3M™ Fire Barrier Sealant IC 15WB+ should be stored indoors in dry conditions between 40°F and 90°F (4°C and 32°C) in the original unopened package. Avoid repeated freeze / thaw exposures of the 3M™ Fire Barrier Sealant IC 15WB+ prior to installation.

Shelf Life 3M™ Fire Barrier Sealant IC 15WB+ shelf life is 12 months in original unopened containers from date of packaging when stored above 68°F (2°C).

Lot numbering (e.g. 8183AS): First digit = Last digit of year manufactured, Second to fourth digit = Julian Date, Letters = Random to distinguish between lot numbers

6. Installation Techniques

Consult a 3M Authorized Fire Protection Products Distributor / Dealer or Sales Representative for applicable UL, cUL, ULC, Intertek, FM or other third-party drawings and system details.

Preparatory Work The surface of the opening and any penetrating items should be cleaned to allow for the proper adhesion of the 3M™ Fire Barrier Sealant IC 15WB+. Ensure that the surface of the substrates are not wet and are frost free. Sealant can be installed with a standard caulking gun, pneumatic pumping equipment or it can be easily applied with a putty knife or trowel.

Installation Details Install the applicable depth of backing material, if required, as detailed within the applicable UL, cUL, ULC, Intertek, FM or other third-party listed system. Cut the end of the 3M™ Fire Barrier Sealant IC 15WB+ tube spout to achieve the desired bead width when applying. Install the applicable depth of 3M™ Fire Barrier Sealant IC 15WB+ into the opening flush with the surface of the substrate, or as detailed within the applicable listed system, at the depth for the assembly and rating that is required. Tool within 5 minutes. Clean all tools immediately after use with water.

Limitations Do not apply 3M™ Fire Barrier Sealant IC 15WB+ when surrounding temperature is than less 40°F (4°C) and in conditions where seals may be exposed to rain or water spray within 18 hours of application. Do not apply 3M™ Fire Barrier Sealant IC 15WB+ to building materials that bleed oil, plasticizers or solvent (e.g. impregnated wood, oil-based sealants, or green or partially vulcanized rubber). Do not apply 3M™ Fire Barrier Sealant IC 15WB+ to wet or frost-coated surfaces or to areas that are continuously damp or immersed in water.

7. Maintenance

No maintenance is expected to be required when installed in accordance with the applicable UL, cUL, ULC, Intertek, FM or other third-party listed system. Once installed, if any section of the 3M™ Fire Barrier Sealant IC 15WB+ is damaged, the following procedure will apply: remove and reinstall the damaged section in accordance with the applicable listed system, with a minimum 1/2 in. (12.7 mm) overlap onto the adjacent material.

8. Availability

3M™ Fire Barrier Sealant IC 15WB+ is available from 3M Authorized Fire Protection Products Distributors and Dealers. 3M™ Fire Barrier Sealant IC 15WB+ is available in 10.1 fl. oz. cartridges (3M ID 98-0400-5509-1, 12/case), 20.0 fl. oz. sausages (3M ID 98-0400-5512-5, 10/case), and 4.5 gallon pails (3M ID 98-0400-5510-9, 1/case). For additional technical and purchasing information regarding this and other 3M Fire Protection Products, please call: 1-800-328-1687 or visit www.3m.com/firestop.

9. Safe Handling Information

Consult country-of-use Material Safety Data Sheet (MSDS) prior to handling and disposal.

3M

Building and Commercial Services Division
3M Center, Building 223-2N-21
St. Paul, MN 55144-1000 USA
1-800-328-1687
www.3M.com/firestop

Important Notice to User:
Technical Information: The technical information, recommendations and other statements contained in this document are based upon tests or experience that 3M believes are reliable, but the accuracy or completeness of such information is not guaranteed.
Product Use: Many factors beyond 3M's control and uniquely within user's knowledge and control can affect the use and performance of a 3M product in a particular application. Given the variety of factors that can affect the use and performance of a 3M product, user is solely responsible for evaluating the 3M product and determining whether it is fit for a particular purpose and suitable for user's method of application.
Warranty and Limited Remedy: 3M warrants that each 3M Fire Protection Product will be free from defects in material and manufacture for 90 days from the date of purchase from 3M's authorized distributor. 3M MAKES NO OTHER EXPRESS OR IMPLIED WARRANTIES, INCLUDING ANY IMPLIED WARRANTY OF MERCHANTABILITY OR FITNESS FOR A PARTICULAR PURPOSE. If a 3M product does not conform to this warranty, the sole and exclusive remedy is, at 3M's option, replacement of the 3M product or refund of the purchase price.
Limitation of Liability: Except where prohibited by law, 3M will not be liable for any loss or damage arising from the 3M product, whether direct, indirect, special, incidental or consequential, regardless of the legal theory asserted.

Please Recycle. Printed in USA.
© 3M 2012. All rights reserved.
98-0400-5077-9 REV B

3M is a trademark of 3M. Used under license in Canada. All other trademarks are the property of their respective owners.

Hollow Metal Door & Hollow Metal Frame Report

Distributed By:

Allegany Door & Hardware, Inc.

1210 Security Road
Hagerstown, MD 21742
Phone: (301) 739-8900
Fax: (301) 790-3009

FRAME PROFILES

RECORD OF SUBMITTALS

SUBMITTED	RETURNED
1ST 5/16/17	
2ND	
3RD	
4TH	

RECEIVED APPROVED DRAWINGS	
RECEIVED APPROVED HARDWARE	

DRAWN BY: BARBARA DISEATI

DOOR HANDING CHART

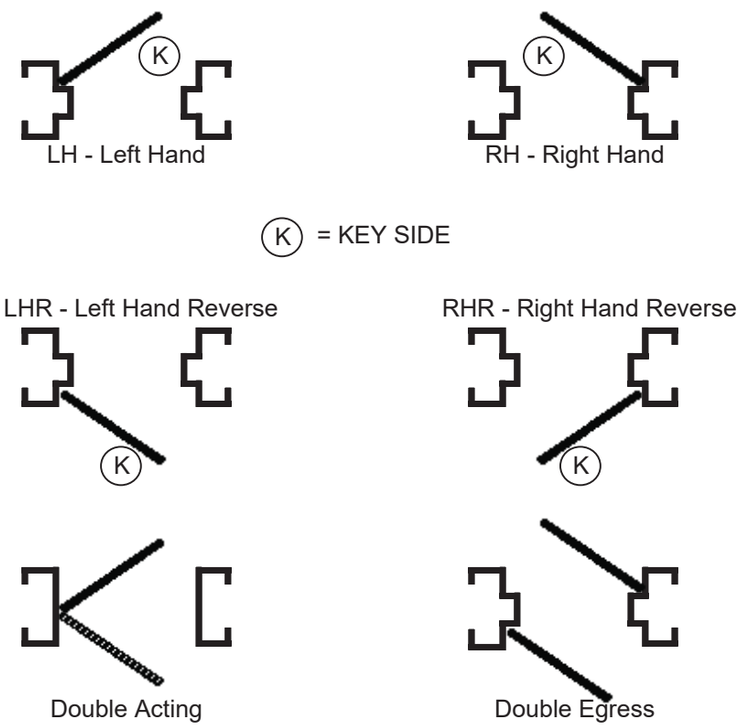

JOB NO.
28142

PROJECT
PRINCE FREDERICK SHA PHASE 2

LOCATION
PRINCE FREDERICK, MD

ARCHITECT
STATE OF MARYLAND

CONTRACTOR
S.E DAVIS CONSTRUCTION LLC

FINISH HARDWARE BY
ALLEGANY DOOR & HARDWARE

Questions

Question Type	Tag	Column	Question	Solution	Tags	Status
Question	101.0	Frame-QUESTIONS	VERIFY ANCHOR - FRAME IS WELDED - PER SPEC			Open
Question	101.1	Door-QUESTIONS	VERIFY 1" UNDERCUT - MARBLE THRESHOLD - DETAIL 6 A-601			Open
Question	101.1	Frame-Notes	VERIFY WALL IS 6 1/4", FRAME IS 7 1/4" - AND ANCHOR SHOULD BE WSCF			Open
Question	101.1	Frame-QUESTIONS	VERIFY DOOR IS 3'0" X 7'0" AND FRAME OUT TO OUT IS 3'4" X 7'2"			Open
Question	103.0	Frame-QUESTIONS	VERIFY ANCHOR - FRAME IS WELDED - PER SPEC			Open
Question	105.0	Frame-Notes	VERIFY WALL IS 4 3/4, FRAME IS 5 3/4" - AND ANCHOR SHOULD BE WSCF			Open
Question	105.0	Frame-QUESTIONS	VERIFY DOOR IS 3'0" X 7'0" AND FRAME OUT TO OUT IS 3'4" X 7'2"			Open
Question	105.0	Door-QUESTIONS	90 MINUTE DOOR - GLASS THICKNESS AND MANUFACTURE REQUIRED - GLASS IS OVER 100 SQ.IN.			Open

LEGEND

Hollow Metal Frame

Add On	
SI	Punch for Silencers
Anchor	
M	Masonry T (Loose)
WSCF	Steel Channel - Flush to Return (Welded)
Construction	
SW	Seam Weld (KD Corner)
Elevation Type	
3F	Three sided frame
Gauge	
16	16 Gauge
18	18 Gauge
Head Face	
2"	2" Face Head
Jamb Face	
2"	2" Face Jambs
Label	
L90S	UL 1-1/2 Hour Label (for Single Opening)
Mfr Location	
CU	CURRIES
Profile	
CM	Drywall anchored frame
M	Masonry
Steel Type	
A60	A60 Galvaneal
CR	Cold Rolled

Hollow Metal Door

Add On	
TC-H	Steel Top Cap SCREW Applied
UC 1 -MT	VERIFY 1" UNDERCUT - MARBLE THRESHOLD
UC58	Undercut Bottom of Door 5/8"
Edge	
N	Seamless edge - EXTERIOR
S	Seam on edge - INTERIOR
Face Type	
F	Flush
FNV* -8" X 36"	FNV* -8" X 36
HG	Half Glass Metal Vision
Gauge	
18	18 Gauge
20	20 Gauge
Label	
UB	UL 'B' (1-1/2 Hour Fire Door)
Mfr Location	
CU	CURRIES
Series	
707	Polystyrene Core
Steel Type	
A60	A60 Galvanneal
CR	Cold rolled
Vision Kit	
T9	Type 9 window molding - 3/8" pocket (standard)

GENERAL NOTES:

1. Material shown on these drawings will be fabricated only after formal approval by the architect and contractor, receipt of approved hardware schedule and all necessary hardware templates.

2. Doors and frames will be reinforced for surface mounted hardware as required. Drilling and tapping for attaching of surface mounted hardware to be provided by others. Doors and frames will be prepared and reinforced for mortise hardware. Holes for this hardware will be drilled and tapped at the factory. Surface exit cylinder and thumb piece holes factory drilled only when ordered.

3. All doors and frames will receive an iron phosphate pretreatment and 1 coat of baked on prime paint.

4. All frame glass stops will be installed tight to the soffit with one screw unless otherwise detailed herein. Installation of glass and glazing (doors and frames) by others.

5. All doors and frames will be marked with the architect's number unless specified otherwise.

6. All frames will be prepared for push-in type silencers, 3 per strike jamb for single frames or 2 per head for double frames (supplied by others).

7. Unless noted otherwise, all hollow metal frames shall be die-mitered. set-up and welded as specified.

8. The hardware locations indicated on the door and frame elevation are this manufacturer's standard locations for standard type hardware unless noted otherwise herein. Other hardware such as deadlocks, panic exit devices, etc., will also be located at this manufacturer's standard locations for that specific hardware unless advised otherwise.

9. All 1-3/4" hollow metal doors to be undercut on the bottom 5/8", unless noted otherwise.

10. On PAIRS of DOORS indicate ACTIVE LEAF in the HANDING column, if other than scheduled.

11. Store doors and frames at the building site under cover. Place units on at least 4" wood sills or on the floors in a manner that will prevent rust and damage. Avoid use of non-vented plastic or canvas shelters, which create a humidity chamber. If the wrapper on the door becomes wet, remove immediately, provide 1/4" space between doors to promote air circulation. Additional storage information per ANSI A250.8 (SDI100) is recommended.

12. When frames in masonry construction to be filled with grout and anti-freeze agents are present, the insides of the frames shall be treated by the general contractor with a suitable undercoating material.

13. 5-3/4 M Series 12 ga. frames require 1/2" minimum backbend returns instead of 7/16".

JOB NO. 28142	PROJECT Prince Frederick SHA	LOCATION

GENERAL NOTES: (Continued)

14. Dimensions shown on elevations are actual representation of material to be provided based on blue prints, specifications, addendums, fire codes and life safety codes. Any Deviation from these dimensions should be noted on each elevation. If any detail conflicts with existing conditions please advise as soon as possible.

15. Please confirm all door sizes, jamb depths, door handings, frame anchorage and frame dimensions (paying close attention to verify with dimensions of existing conditions).

16. Some jamb depths and door designs may have a factory lead time of 6-8 weeks.

17. ALL LEAD TIMES BEGIN FROM THE DATE OF RETURNED APPROVED SUBMITTALS.

18. Glass and Glazing by Others. (Unless otherwise noted.)

19. Welded frames that are to be set in interior drywall walls must be installed prior to sheet rock/drywall being installed.

20. Temporary spreader bars of frames are for shipping only. It is the responsibility of the contractor to set plumb and level hollow metal frames using proper construction practices to ensure proper maintaining width of frames.

21. SUBMITTALS/SHOP DRAWINGS ARE AN ACTUAL REPRESENTATION OF MATERIAL TO BE SUPPLIED. PLEASE ADVISE IMMEDITELY OF ANY DISCREPANY WITH ANY INFORMATION SUBMITTED.

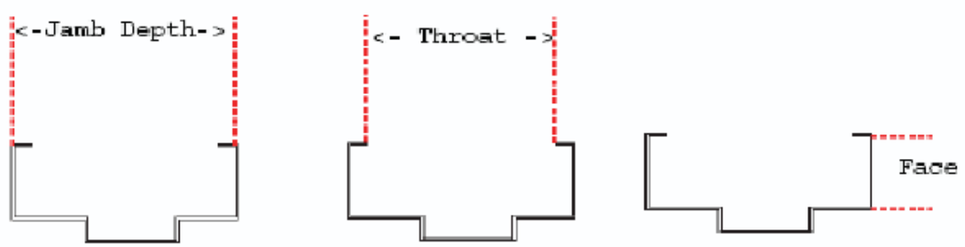

JOB NO. 28142	PROJECT Prince Frederick SHA	LOCATION

Material Schedule

Project ID: 28142 PRINCE FREDERICK SHA PHASE 2

Job Number: 28142

OPENINGS					DOORS									FRAMES										
Opening #	Arch Mark	Qty	UOM	Hand	Mat	Qty	Hand	Elevation	UOM	Status				Mat	Qty	Hand	Elevation	UOM	Status					
Rev	Location				Notes								Size	Notes									Size	Jamb
Hdw Set	Description				Series	Label	Face Type	Ga	S.T.	Edge	Glass	Louver	Vision Kit	Elev	Profile	Jamb	Label	Head Face	Const	Anchor	Ga	S.T.		
					Door Type			Sill Detail					QUESTIONS	Frame Type			Wall Type						QUESTIONS	
101.0	101.0	1	SGL	LHR	HMD	1	LHR			SGL				HMF	1	LHR			SGL					
	VESTIBULE 101 FROM LINCH RM/CONFERERENCE 104				Undercut Bottom of Door 5/8"								3' 0"x7' 0" x 1 3/4"	Punch for Silencers									3' 0" x 7' 0"	5 7/8"
HW-1	3' 0" x 7' 0" x 1 3/4" HMD/HMF				707		FNV* - 8" X 36"	20	CR	S		T9		3F	CM	2"		2"	SW	WSCF	18	CR		
						C									1		OB.2 - DETAIL 9/A-601						VERIFY ANCHOR - FRAME IS WELDED - PER SPEC	
101.1	101.1	1	SGL	LHR	HMD	1	LHR			SGL				HMF	1	LHR			SGL					
	EXISTING VEST. 101.1 FROM VESTIBULE 101				VERIFY 1" UNDERCUT - MARBLE THRESHOLD								3' 0"x7' 0" x 1 3/4"	VERIFY WALL IS 6 1/4" - AND ANCHOR SHOULD BE VERIFY EXISTING OPENING IS 3'0" X 7'0" Punch for Silencers						WSCF			3' 0" x 7' 0"	7 1/4"
HW-3	3' 0" x 7' 0" x 1 3/4" HMD/HMF				707		FNV* - 8" X 36"	20	CR	S		T9		3F	CM	2"		2"	SW	WSCF	18	CR		
						C		6 /A-601					VERIFY 1" UNDERCUT - MARBLE THRESHOLD - DETAIL 6 A-601		1		2N.2 ? - DETAIL 11/A-601						VERIFY DOOR IS 3'0" X 7'0" AND FRAME OUT TO OUT IS 3'4" X 7'2"	
103.0	103.0	1	SGL	LH	HMD	1	LH			SGL				HMF	1	LH			SGL					
	VESTIBULE 101 TO KITCHEN 103				Undercut Bottom of Door 5/8"								3' 0"x7' 0" x 1 3/4"	Punch for Silencers									3' 0" x 7' 0"	8 1/4"
HW-1	3' 0" x 7' 0" x 1 3/4" HMD/HMF				707		HG	20	CR	S		T9		3F	CM	2"		2"	SW	WSCF	18	CR		
						B									1		OA.2 - DETAIL 9/A=601						VERIFY ANCHOR - FRAME IS WELDED - PER SPEC	
104.0	104.0	1	SGL	LHR	HMD	1	LHR			SGL				HMF	1	LHR			SGL					
	EXTERIOR FROM LINCH RM/CONFERERENCE 104				Steel Top Cap SCREW Applied Undercut Bottom of Door 5/8"								3' 0"x7' 2" x 1 3/4"	Punch for Silencers									3' 0" x 7' 2"	8 3/4"
HW-2	3' 0" x 7' 2" x 1 3/4" HMD/HMF				707		F	18	A60	N				3F	M	2"		2"	SW	M	16	A60		
						A		5 /A-601							1		DETAIL 3/A-601							

Material Schedule

Project ID: 28142 PRINCE FREDERICK SHA PHASE 2

Job Number: 28142

OPENINGS					DOORS										FRAMES										
Opening #	Arch Mark	Qty	UOM	Hand	Mat	Qty	Hand	Elevation	UOM	Status					Mat	Qty	Hand	Elevation	UOM	Status					
Rev	Location				Notes								Size		Notes								Size		Jamb
Hdw Set	Description				Series	Label	Face Type	Ga	S.T.	Edge	Glass	Louver	Vision Kit		Elev	Profile	Jamb	Label	Head Face	Const	Anchor	Ga	S.T.		
					Door Type			Sill Detail						QUESTIONS	Frame Type			Wall Type							QUESTIONS
105.0	105.0	1	SGL	RH	HMD	1	RH			SGL					HMF	1	RH			SGL					
	VENDING ROOM TO KITCHEN 103				Undercut Bottom of Door 5/8"								3' 0"x7' 0" x 1 3/4"		VERIFY WALL IS 4 3/4" - AND ANCHOR SHOULD BE VERIFY EXISTING OPENING IS 3'0" X 7'0" Punch for Silencers						WSCF		3' 0" x 7' 0"		5 3/4"
HW-3	3' 0" x 7' 0" x 1 3/4" HMD/HMF (90)				707	UB	FNV* - 8" X 36"	20	CR	S			T9		3F	CM	2"	L90S	2"	SW	WSCF	16	CR		
						C								90 MINUTE DOOR - GLASS THICKNESS AND MANUFACTURE REQUIRED - GLASS IS OVER 100 SQ.IN.		1		2N.1							VERIFY DOOR IS 3'0" X 7'0" AND FRAME OUT TO OUT IS 3'4" X 7'2"

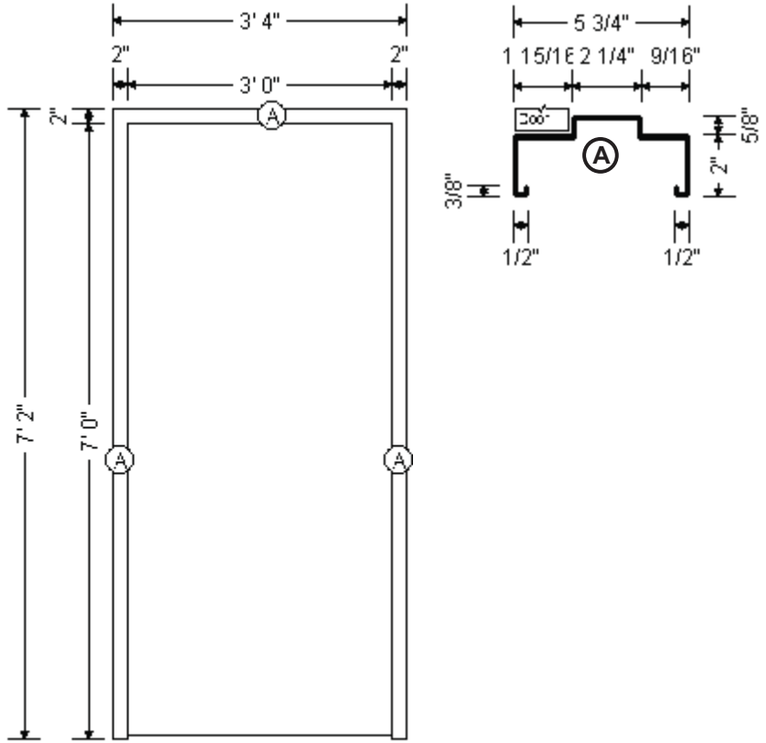

1-3070-5 3/4"

Doors #s:
105.0 (3' 0" x 7' 0"),

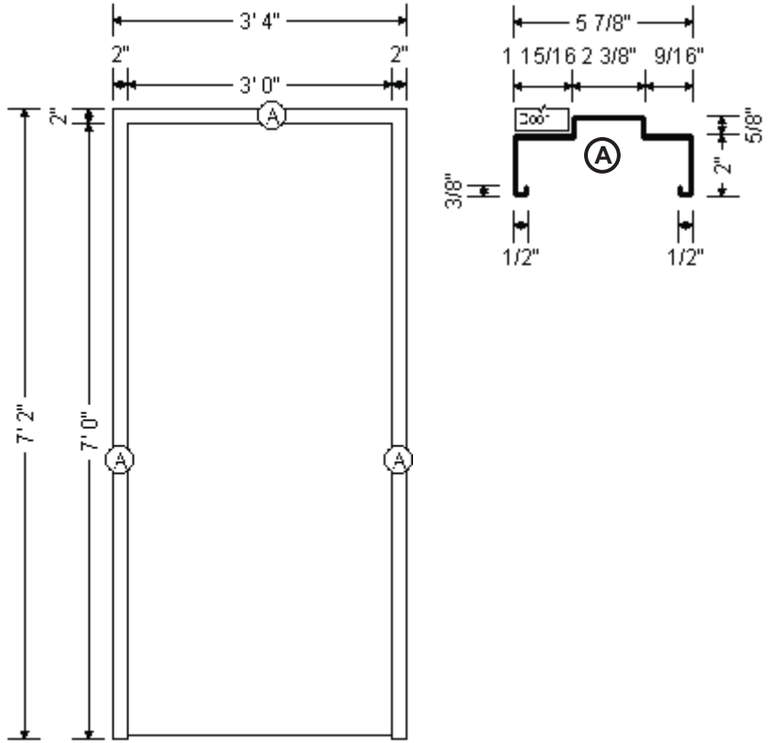

1-3070-5 7/8"

Doors #s:
101.0 (3' 0" x 7' 0"),

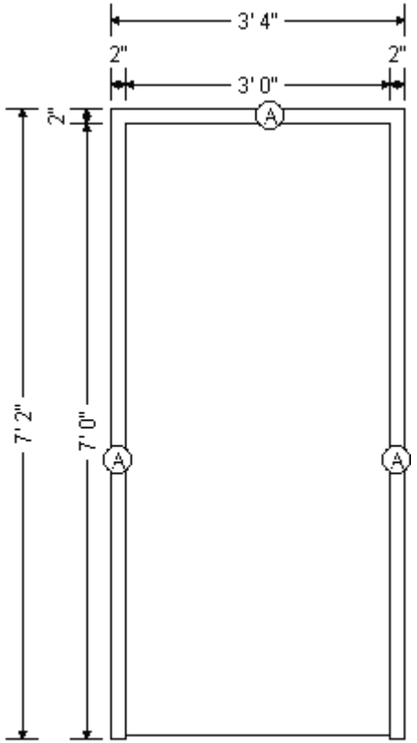

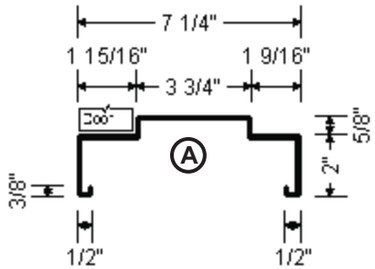

1-3070-7 1/4"

Doors #s:
101.1 (3' 0" x 7' 0"),

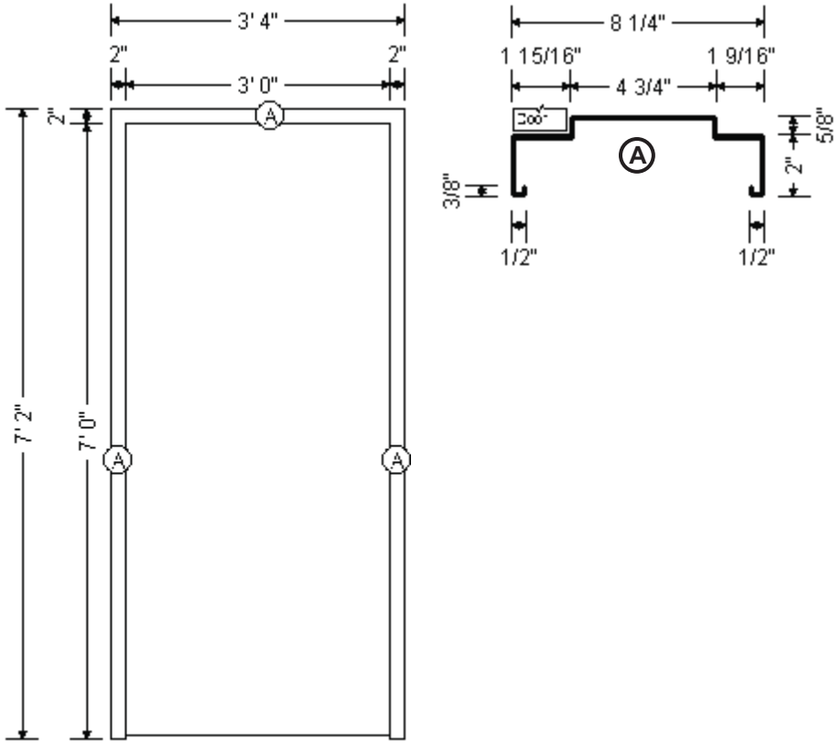

1-3070-8 1/4"

Doors #s:
103.0 (3' 0" x 7' 0"),

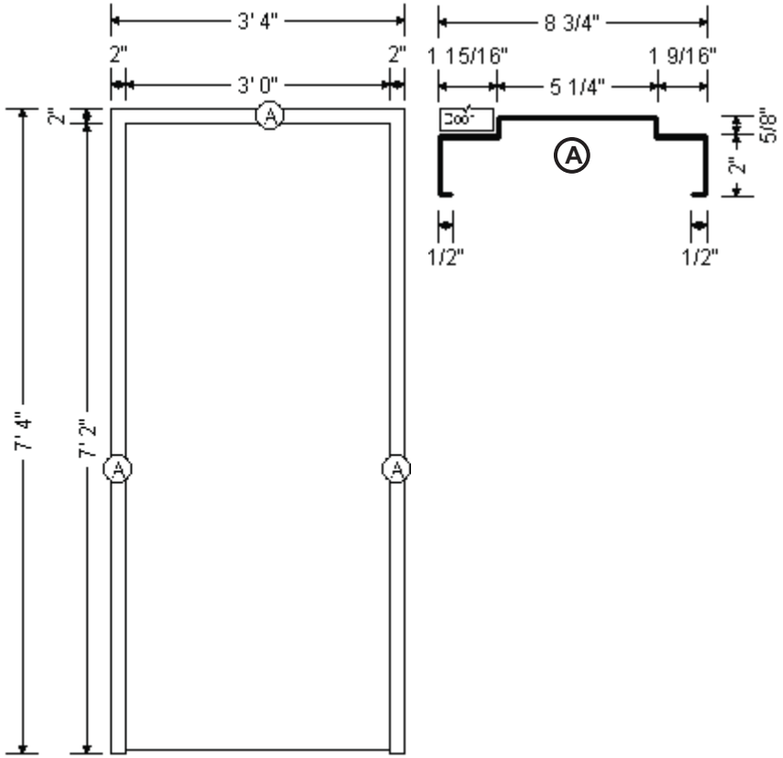

1-3072-8 3/4"

Doors #s:
104.0 (3' 0" x 7' 2"),

M SERIES FLUSH FRAMES

Specifications

Frames shall be M series as manufactured by CURRIES of Mason City, Iowa. Frames are to be fabricated of either cold-rolled or galvannealed steel (as specified) of either 18, 16, gauge. Joints are to be die-mitered with integral tabs for reinforcement and interlocking ot the jambs to the head (KD). 12 gauge frames are saw miter or saw butt end corner construction. Frames shall be knock-down or set-up and welded. Frames shall be thoroughly cleaned and receive an iron phosphate treatment prior to receiving one coat of baked on prime paint. Frames are to be reinforced only for surface mounted hardware, with drilling and tapping to be done in the field by others. Metal plaster guards are to be provided for all mortise cutouts. Minimum requirements for hardware reinforcements are to be as follows: Hinge Reinforcing - 7 gauge x 1-5/8" (41) x 10" (245), Lock Strike Reinforcing - 14 gauge conforming to template requirements and closer reinforcing - 12 gauge.

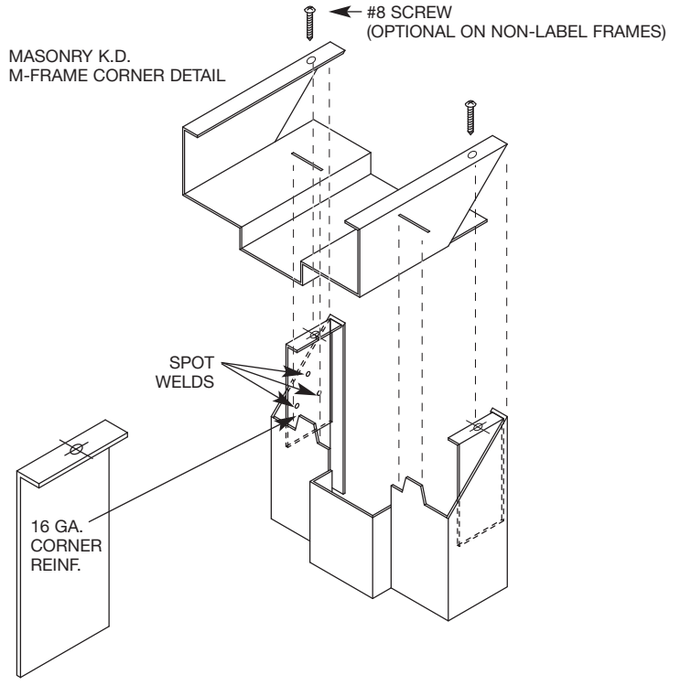

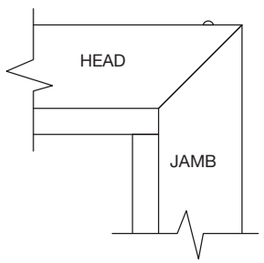

2" FACE HEAD CORNER
ASSEMBLY

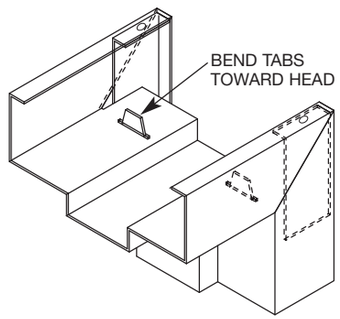

JOB NO. 28142	PROJECT Prince Frederick SHA	LOCATION

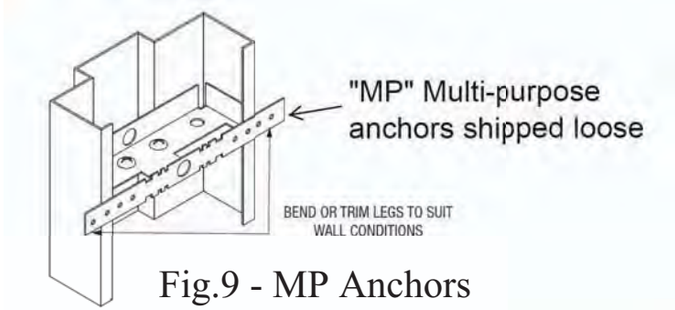

Fig.9 - MP Anchors

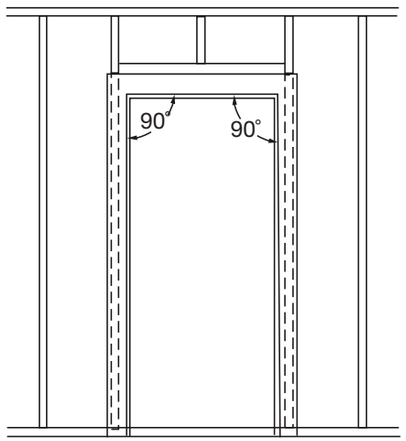

Fig. 10 – Steel Stud Wall Const.

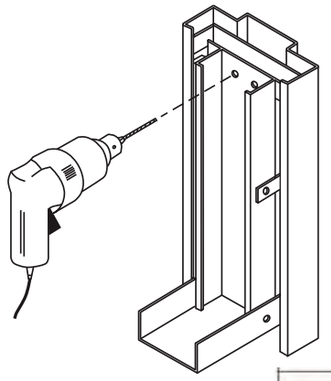

Fig. 11

Steel Stud Wall Construction

a. Assemble frame.
b. Install anchors. Position anchors in frame through the throat and tap in with a hammer. Frames may also be supplied with anchors welded in place. (see Fig.9)
c. Square, brace and plumb frame as shown. (see next page)
d. Attach jambs to floor through floor anchor or floor extension. Install jamb studs to floor and ceiling runners and tightly against frame anchors.
e. Position studs in frame throat and attach to anchors with screws or weld. If using screws, drill from the back side of the stud, through both the stud and anchor, then attach with (2) screws per anchor location (see fig. 11)
f. or, when anchors are strap type, attach anchor to face of stud through the anchor strap (2) per anchor. Screws shall be #6 x 3/8" (min.) steel sheet metal or self tapping type.

NOTE: When attaching header stud to jamb studs, be sure the stud is above frame header. This will assure ample room for attaching plaster lath or drywall and will not interfere with installation of hardware attached to frame header.

NOTE: Drywall must extend at least 1/2" into frame at fire rated installations.

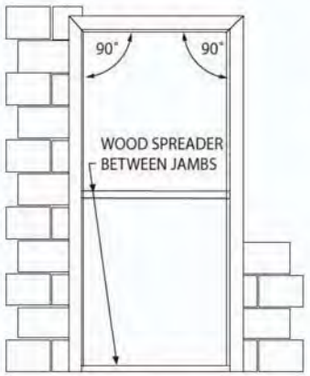

Fig. 8 – Existing Masonry Const.

Existing Masonry Construction (see fig. 8)

a. Assemble frame.
b. Install snap-in anchors to align with pierced holes in jambs. (Frames may also be supplied with anchors welded in place).
c. Slide frame into wall opening; install wood spreaders.
d. Use tapered shims between anchors and wall and spreaders to maintain squareness and alignment of frame, and to maintain door opening.
e. Where possible, one jamb should be butted tightly to the wall. Backer rod or caulking shall be used where gaps occur between frame and wall.
f. Insert anchor bolts and tighten securely, checking for frame alignment periodically (see fig. 9).

NOTE: The space between the wall and the frame should be 1/8" or less.

g. Install plugs to cover bolt heads (if so equipped).

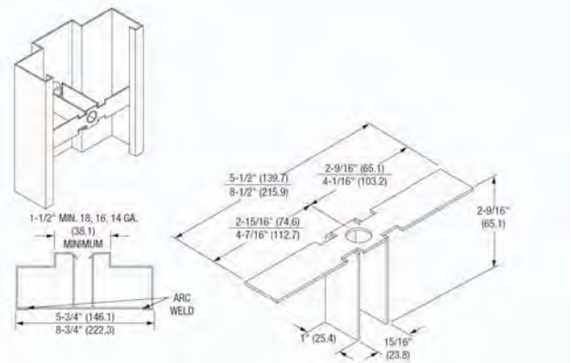

WEWA - Welded Existing Wall Anchors

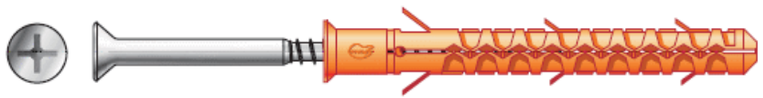

6" Anchors Provided:
Mungo MB-S Nylon Frame Plug

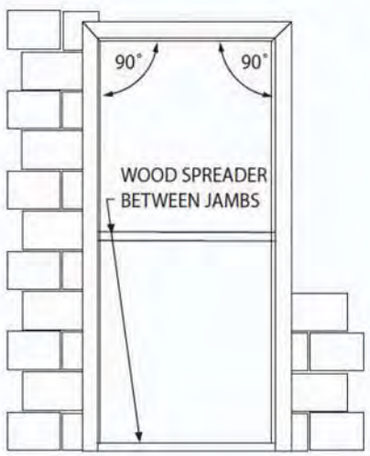

Fig. 6 – New Masonry Const.

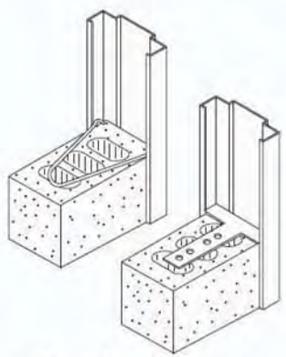

Fig. 7 – Anchors

New Masonry Construction (see fig. 6)

a. Assemble frame
b. Install wood spreaders, set brace and plumb frame.
c. Set second spreader at the mid point of the door opening to maintain the door opening dimensions.
d. Install anchors (see fig. 7). Grout frame in the area of the anchors as block courses are laid up. Frame should be fully grouted. Frames have been tested fully grouted using T anchors or wire anchors. Frames may also be supplied with anchors welded in place.
e. Continually check plumb and square as wall progresses.

CURRIES Frame and Anchor Installations

Approved for use with Positive Pressure UL10c

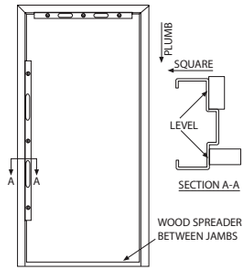

Fig. 1 – Plumbing the Frame

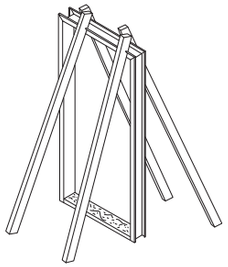

Fig. 2 – Bracing the Frame

Fig. 3 – Spreader

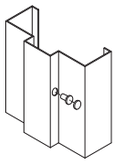

Fig. 4
Rubber
Silencers

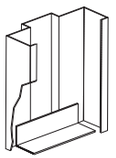

Fig. 5
Extended
Base Anchor

Plumbing and Bracing Frames

Plumbing the frame (see fig. 1)

The contractor should be equipped with a carpenter level, square and wood spreaders. Where welded frames are provided with spreader bars, they shall be removed before setting frames. Set the frame in the desired location and level the header. Square jambs to header. Shim under jambs if necessary. With frame on line, set wood spreader and fasten jambs to floor through floor anchors.

Bracing the frame (see fig. 2)

Brace the frame as shown or shore to a structure above. *Do not brace in the direction of intended wall.* Plumb and square jambs. Install vertical brace to support header for openings over 4'0" wide.

Spreader (see fig. 3)

Wood spreader shall be square and fabricated from lumber no less than 1" thick. Correct length is the door opening width between the jambs at the header (i.e., single door 3'0" = 36"). Cut clearance notches for frame stops. Spreader shall be nearly as wide as frame jamb depth for proper installation.

NOTE: Spreader bars for shipping purposes should not be used as installation spreaders.

Accessories

Install rubber silencers (see fig. 4)

Cut the point from a #6d box or finishing nail. Insert nail in hole to elongate rubber silencers. Moisten the end and insert rubber silencers in predrilled holes on frame stop, remove nail. The thickness of the silencer shall permit latching of door with 1/16" clearance between face of door and stop of frame.

NOTE: Install rubber silencers before frame erection to avoid grout filling rubber silencer holes.

Extended base anchor (see fig. 5)

Extended base anchors are supplied upon request only. (If required for tool attachment.)

ANCHORS

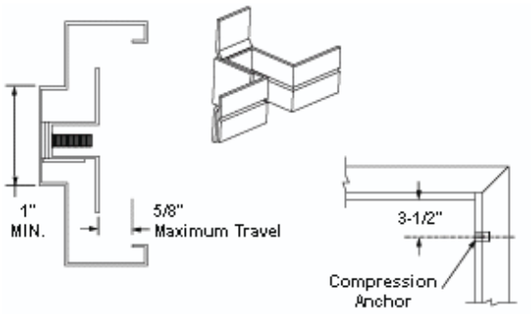

CBA

Compression Anchor

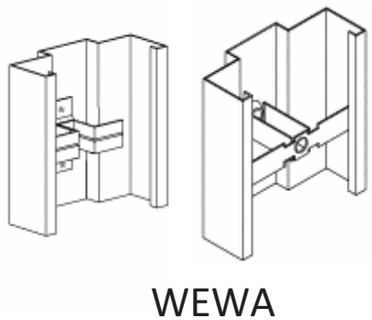

WEWA

Existing Wall Anchor

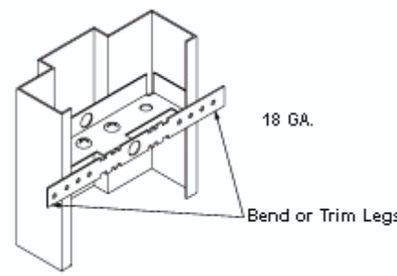

MP

Multi-Purpose

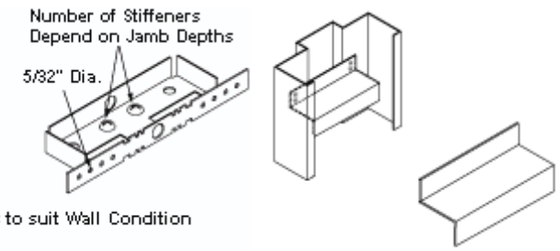

WSCF

Steel Channel - Welded

HINGE AND STRIKE LOCATIONS FOR 1-3/4" FRAMES

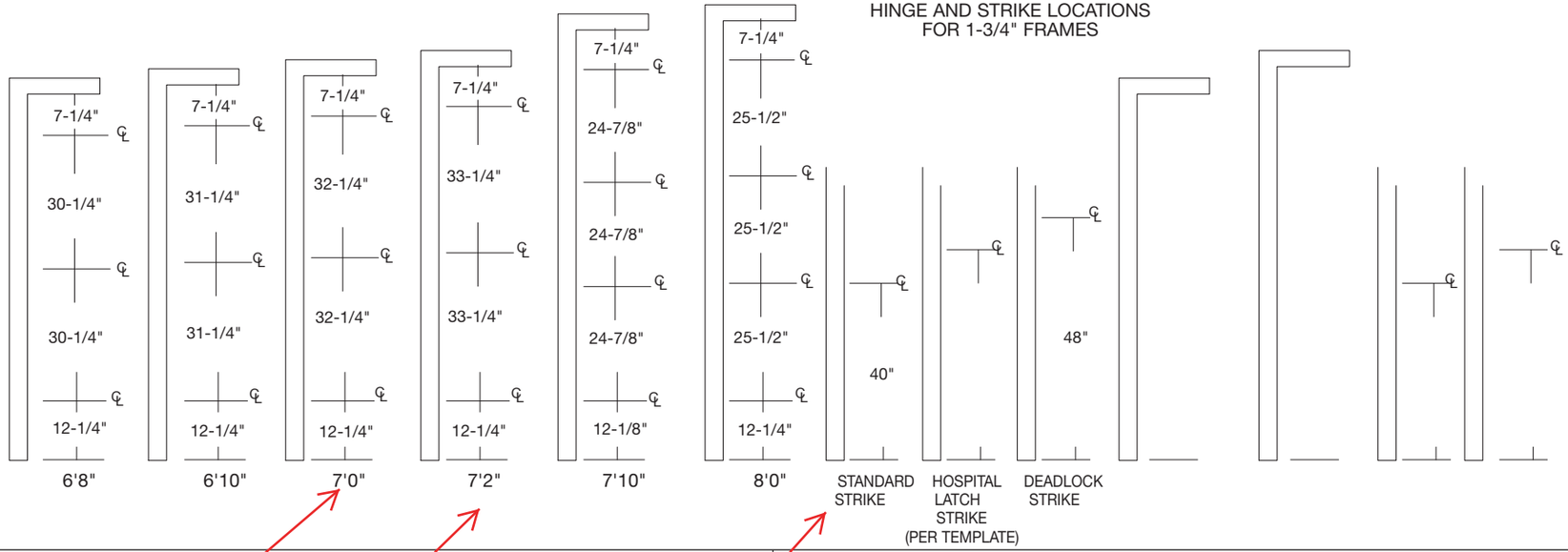

STANDARD LOCATIONS FOR 1-3/4" DOORS

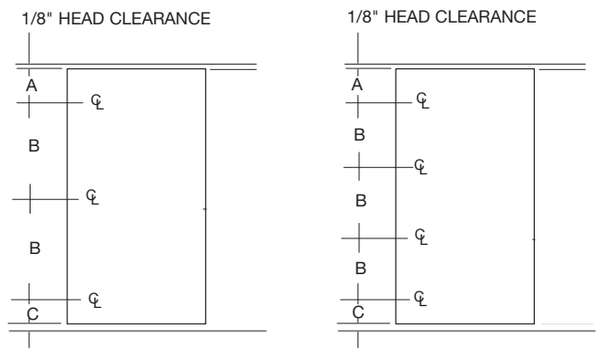

THREE HINGES

SIZE	A	B	C
6'8"	7-1/8"	30-1/4"	11-5/8"
6'10"	7-1/8"	31-1/4"	11-5/8"
7'0"	7-1/8"	32-1/4"	11-5/8"
7'2"	7-1/8"	33-1/4"	11-5/8"
7'10"	7-1/8"	37-1/4"	11-5/8"
8'0"	7-1/8"	38-1/4"	11-5/8"

HINGE BACKSET 1/4"

FOUR HINGES

SIZE	A	B	C
6'8"	7-1/8"	20-1/8"	11-5/8"
6'10"	7-1/8"	20-7/8"	11-5/8"
7'0"	7-1/8"	21-1/2"	11-5/8"
7'2"	7-1/8"	22-1/8"	11-5/8"
7'10"	7-1/8"	24-7/8"	11-5/8"
8'0"	7-1/8"	25-1/2"	11-5/8"

HINGE BACKSET 1/4"

JOB NO. 28142	PROJECT Prince Frederick SHA	LOCATION	

CONFIRM UNDERCUTS AS NOTED IN SCHEDULE

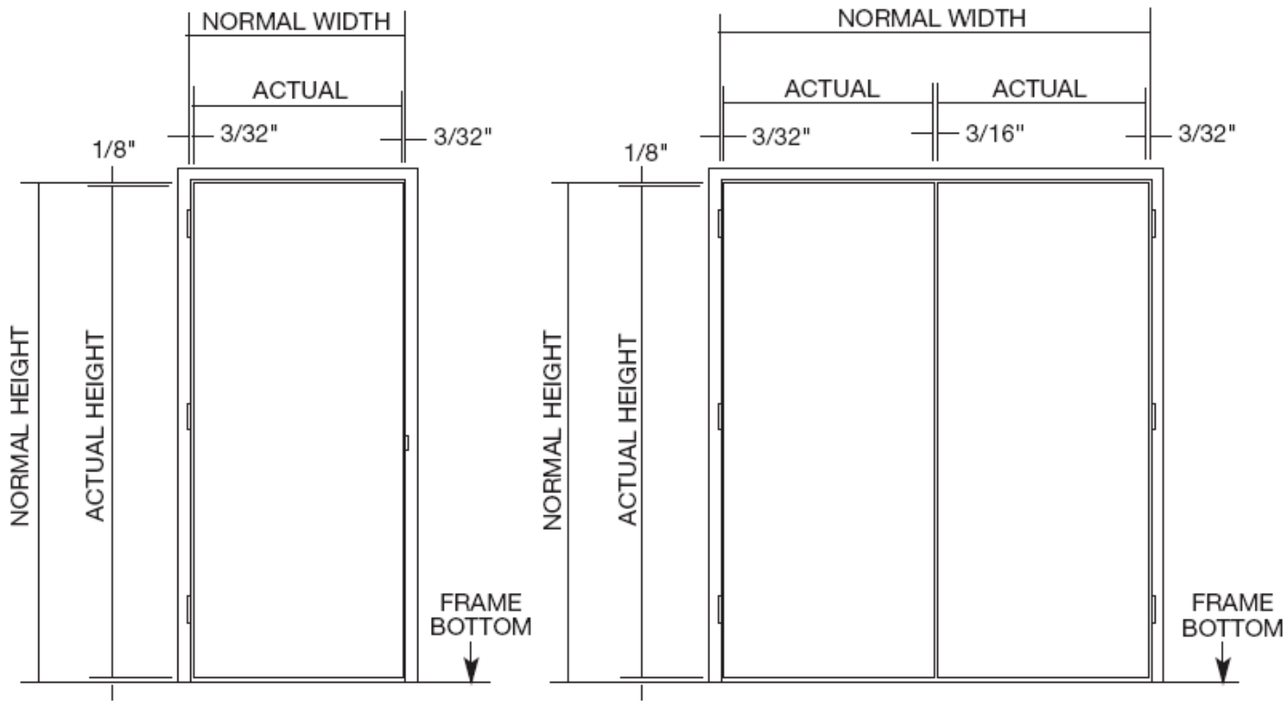

*NOTE: 5/8" STD. 1-3/4".

JOB NO. 28142	PROJECT Prince Frederick SHA	LOCATION	

C-022

ALLEGANY DOOR AND HARDWARE INC

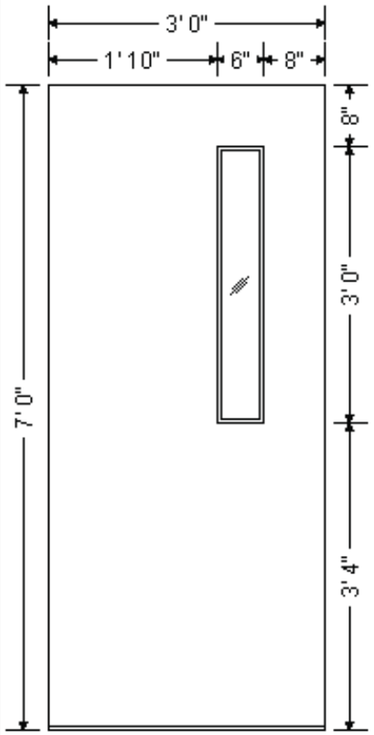

8 TOP AND SIDE RAIL FOR HARDWARE ALLOWANCE AND AVOID LITE LOCK CONFLICT

1/4 GLASS - BY OTHERS

3070-FNV*-TYPE C

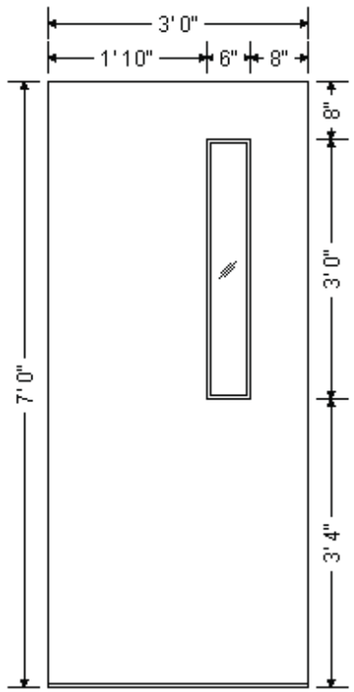

8 TOP AND SIDE RAIL FOR HARDWARE ALLOWANCE AND AVOID LITE LOCK CONFLICT

90 MINUTE DOOR - GLASS THICKNESS AND MANUFACTURE REQUIRED - GLASS IS OVER 100 SQ.IN.

3070-FNV*-TYPE C-90 MIN

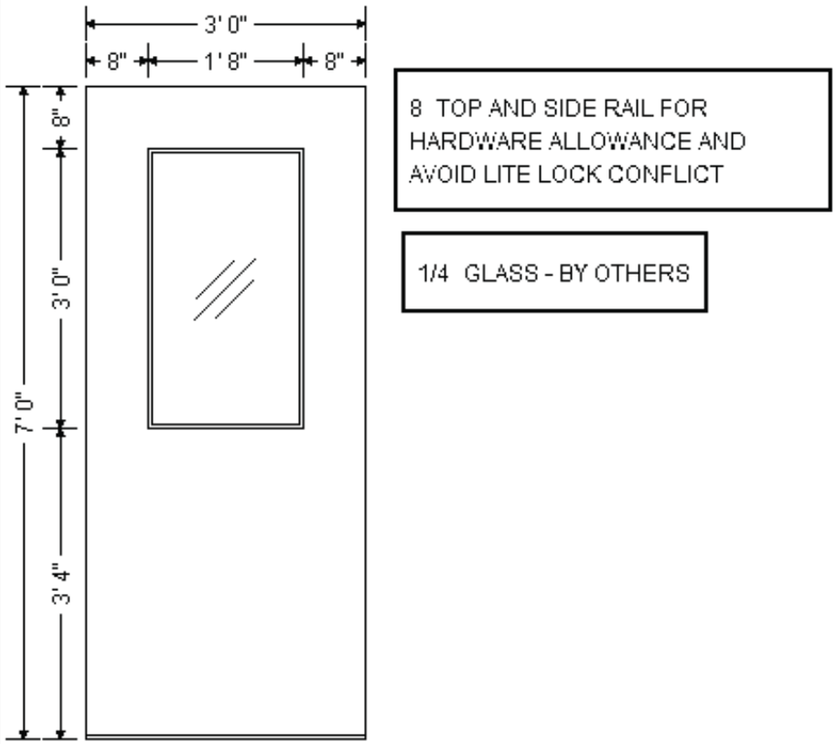

8 TOP AND SIDE RAIL FOR HARDWARE ALLOWANCE AND AVOID LITE LOCK CONFLICT

1/4 GLASS - BY OTHERS

3070-HG-TYPE B

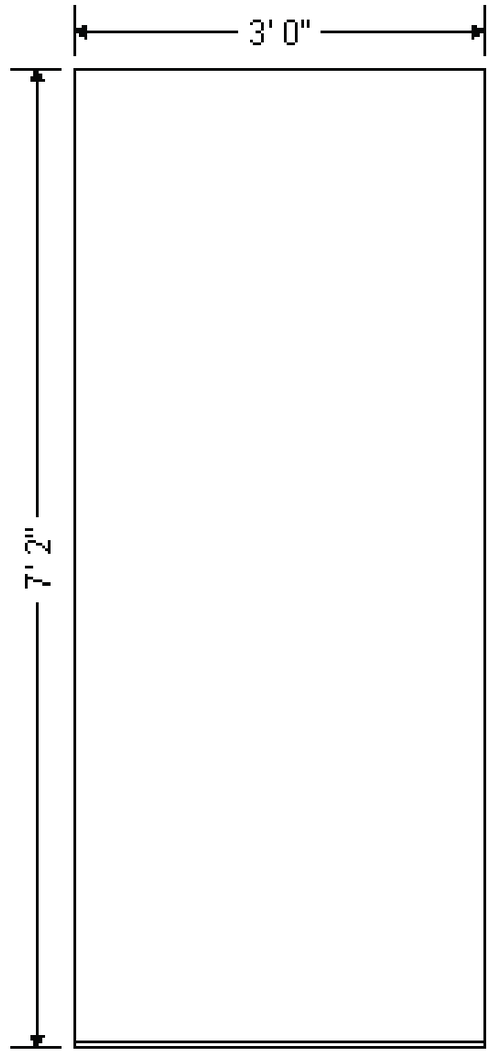

3072-FLUSH-TYPE A

707 SERIES

Specifications

Doors shall be 707 type as manufactured by CURRIES, Mason City, Iowa. Doors are to be manufactured of the finest quality 14, 16, 18, 20 (specify gauge) cold rolled stretcher leveled steel or galvannealed steel (specify). All doors shall be full flush construction and either 1-3/4" (44) or 1-3/8" (35) thick. Doors shall be reinforced, stiffened, insulated, and sound deadened with a solid polystyrene foam board permanently bonded to the inside of each face skin. The lock and hinge edge of each door shall be welded with a centered hairline seam the full height of the door (707S) OR both the lock and hinge edge of each door shall be welded, filled and ground smooth (seamless) the full height of the door (707N)

The lock edge shall be reinforced full height by a 14 gauge continuous one piece channel x extruded templating. The hinge edge shall be reinforced full height by a 14 gauge continuous one piece channel, formed and tapped for hinges. Top and bottom of the door shall be closed with 16 gauge channels. Doors shall have beveled 1/8" (3) in 2" (51) lock edge and square hinge edge. Doors shall be thoroughly cleaned and receive an iron phosphate treatment prior to receiving one coat of prime paint. Minimum hardware reinforcement shall consist of the following: Closers - Overhead Holders - Rim Panics, 14 gauge channels; Butts and Locks as previously specified herein. Floor Closers and Pivots - 7 gauge x template requirements.

NOTE:
#4 stainless steel can be substituted into this specification with 16 ga. faces.

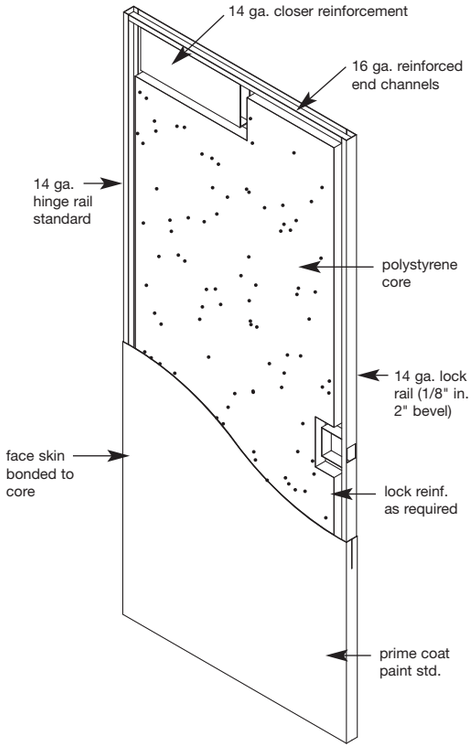

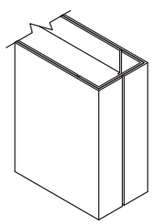

707S
Exposed hairline seam on center of door edge

INTERIOR

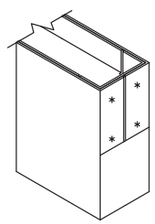

707N
Seam welded, filled and ground smooth.

EXTERIOR

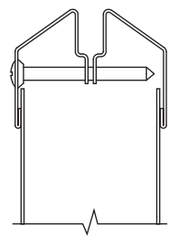

STANDARD GLASS MOLDING

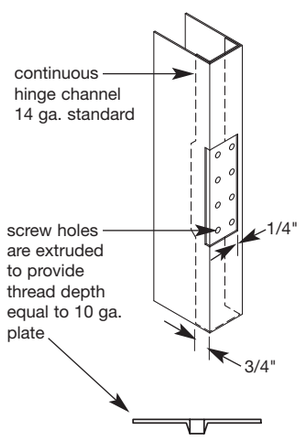

707 SERIES HINGE CHANNEL REINFORCING

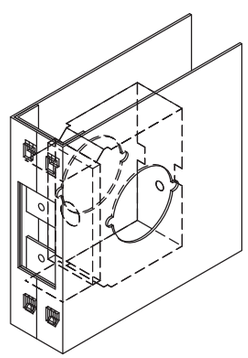

GOVT. 161 CYLINDRICAL LOCK REINFORCEMENT

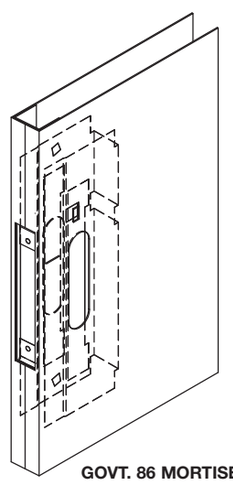

GOVT. 86 MORTISE LOCK REINFORCEMENT

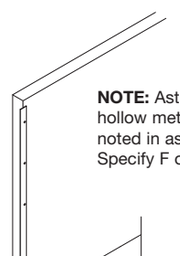

NOTE: Astragals provided by hollow metal supplier only if noted in astragal column. Specify F or Z type.

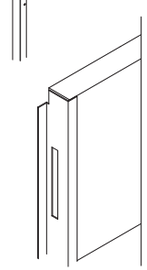

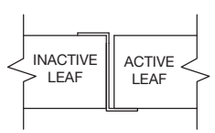

JOB NO. 28142	PROJECT Prince Frederick SHA	LOCATION	

L

SQUARE — HINGE — **"A" BEVEL** — LOCK — 1/8" IN 2" BEVEL (3.2) IN (50.8)

STANDARD DOOR BEVEL

SQUARE — HINGE — **"B" BEVEL** — LOCK — SQUARE

DOOR BEVEL (NON-HANDED)
POCKET DOOR, TRANSOM PANEL,
SIDELITE PANEL

1/8" IN 2" BEVEL (3.2) IN (50.8) WITH 1/4" (6.4) RADIUS LOW SIDE — HINGE — **"D" BEVEL** — LOCK — 1/8" IN 2" BEVEL (3.2) IN (50.8)

REQUIRED WITH ALL OFFSET PIVOT HARDWARE
VERIFY ALL HARDWARE ADAPTABILITY

2-5/8" (66.8) RADIUS OR *HARDWARE WILL DETERMINE THE RADIUS — HINGE — **"E" BEVEL** — LOCK — 2-5/8" (66.8) RADIUS RADIUS SHOULD MATCH HINGE EDGE

BULL NOSE BOTH ENDS ("N" OR "T" EDGE ONLY)
REQUIRED WITH SOME DOUBLE ACTING HARDWARE
VERIFY ALL HARDWARE ADAPTABILITY

2-5/8" (66.8) RADIUS — HINGE — **"F" BEVEL** — LOCK — SQUARE

BULL NOSE BOTH ENDS ("N" OR "T" EDGE ONLY)
REQUIRED WITH DOUBLE ACTING HARDWARE
VERIFY ALL HARDWARE ADAPTABILITY

1/8" IN 2" BEVEL (3.2) IN (50.8) — HINGE — **"G" BEVEL** — LOCK — 1/8" IN 2" BEVEL (3.2) IN (50.8)

SPECIAL DOOR BEVEL

Steel Top/Bottom Filler Cap

L

SCREW APPLIED

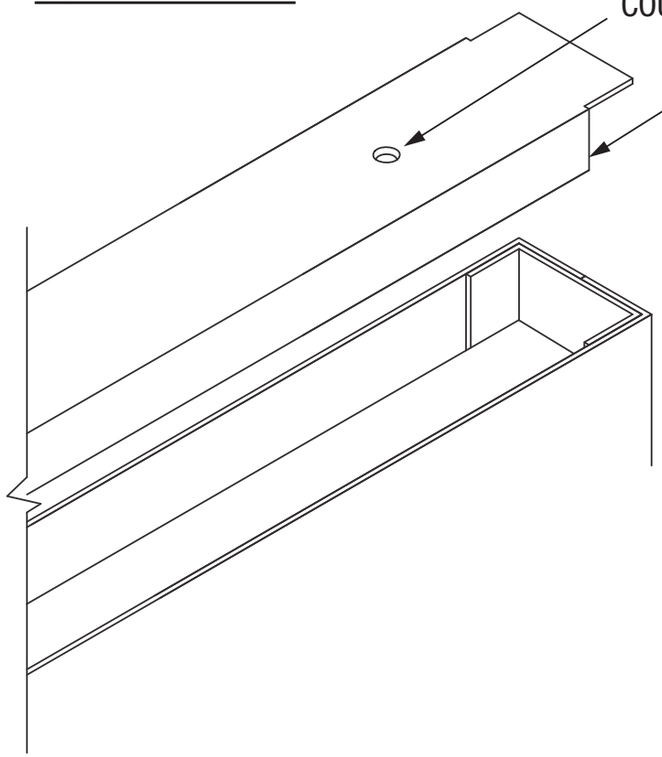

END VIEW

TOP CAP

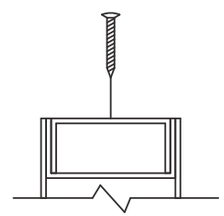

Type 9 & 10 Window Moulding

(L)

Type 9 & 10 Kits

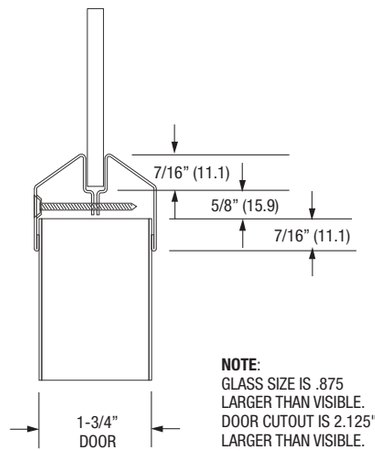

NOTE:
GLASS SIZE IS .875
LARGER THAN VISIBLE.
DOOR CUTOUT IS 2.125"
LARGER THAN VISIBLE.

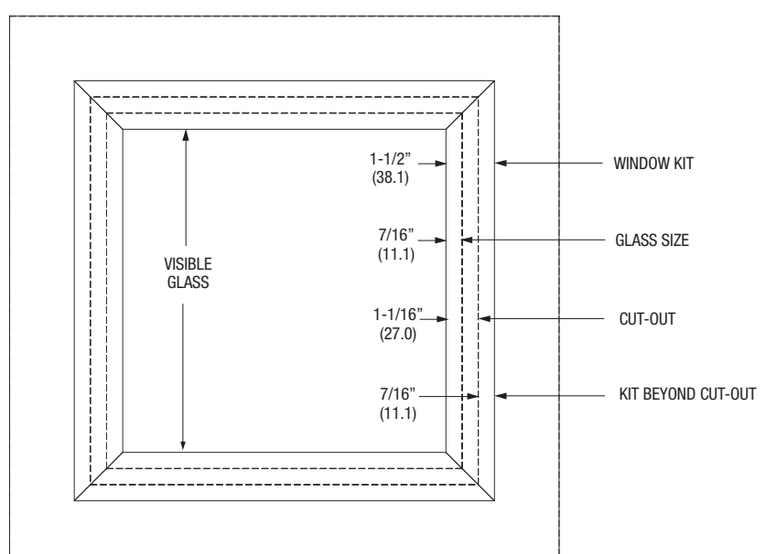

Channel Reinforcing Performance Characteristics

Channel vs. Plate Reinforcing Section Properties Comparison

A comparison of the section properties (tension, compression, and flexure) of channel type (3/4" x 1.625") and flat bar (1-1/4") reinforcing was performed. The u-channel reinforcing used in CURRIES' hollow metal doors exhibits superior properties to that of the flat bar reinforcing.

Channel vs. Plate	% Increase in Compression and Yielding Tension	% Increase in in Fracture Tension	% Increase in Flexure (Perpendicular)	% Increase in Flexure (Parallel)
14 ga. vs. 10 ga.	32	36	2,100	395
12 ga. vs. 7 ga.	38	41	1,550	407

Hinge Channel Reinforcing #12-24 Thread Pullout Strength

Screw pullout testing has been performed on CURRIES' 12 and 14 gauge channel with extruded hole, 12 and 7 gauge flat, and 14 gauge flat double thickness to determine relative thread strength.

Sample	Results* (lb)	Observations
12 gauge channel with extruded hole	1,840	Fastener pulled apart, screw still operable in sample
12 gauge flat	1,240	Thread stripped off end of fastener
7 gauge flat	1,910	Fastener pulled apart, screw still operable in sample
14 gauge channel with extruded hole	1,250	Channel distorted before threads failed
14 gauge flat double thickness	1,320	Material distorted and thread failed

*Average of three samples tested.

The 14 gauge channel's extruded hole threads are stronger than the parent metal or the fastener. The results listed are for a single screw hole. A hinge that is mounted to a 14 gauge hinge channel has a combined strength of 5000 lbs ((1,250lbs/screw)*(4 screws/hinge)).

NOTE: Information included in this data sheet is proprietary to CURRIES Company and subject to revision without notification.

Steel Specifications

ASTM Steel Specifications

CURRIES manufactures products from steel meeting applicable ASTM specifications that are listed in ANSI A250.8. Cold rolled, hot rolled, galvanized, galvannealed, and stainless steel products are summarized in the table below:

CURRIES' Product Uses	Material Gauge	Steel Type	ASTM Designation
Doors and Reinforcements	20, 18, 16, 14, 12	Cold Rolled	A1008/A1008M
Frames	18, 16, 14, 12		A568/568M
E1 Coverbox w/Integral Tabs	16		A1008/A1008M
Reinforcing	11, 7	Hot Rolled	A568/568M
Door Hinge/Lock Channels	14, 12, 10		A1011/A1011M
Doors	20, 18, 16, 14,	Galvanized	A653/A653M
Frames	16, 14,12	G90	
Doors	20, 18, 16, 14,	Galvannealed	A653/A653M
Frames	18, 16, 14, 12	A60	A924/A924M
Snap-In Top Caps	24		
Doors	20, 18, 16	Stainless Steel	A480/A480M
Frames	18, 16, 14	#304	

A480/A480M Specification for General Requirements for Flat-Rolled Stainless and Heat-Resisting Steel Plate, Sheet, and Strip.
A568/A568M Specification for Steel, Sheet, Carbon, and High-Strength, Low-Alloy, Hot-Rolled and Cold-Rolled Sheet, General Requirements for
A653/A653M Specification for Steel Sheet, Zinc-Coated (Galvanized) or Zinc-Iron Alloy-Coated (Galvannealed) by the Hot Dip Process.
A924/A924M Specification for General Requirements for Steel Sheet, Metallic-Coated by the Hot-Dip Process.
A1008/A1008M Specification for Steel, Sheet, Cold-Rolled, Carbon, Structural, High-Strength Low-Alloy and High-Strength Low-Alloy with Improved Formability.
A1011/A1011M Specification for Steel, Sheet and Strip, Hot-Rolled, Carbon, Structural, High-Strength Low-Alloy and High-Strength Low Alloy with Improved Formability.

Types of Zinc-Coating

Zinc-coated steel doors and frames are fabricated from steel that has been zinc-coated by the "Hotdip" process. This process consists of submerging the steel in a bath of molten zinc. As the steel emerges various means are used to level and control the thickness of the zinc-coating to achieve a specific coating weight.

The zinc-coating produced from this method consists of an iron-zinc alloy layer with spangles of free zinc sitting on the surface. This type of coating is referred to with a G designation. If the steel is subjected to an additional annealing (heat treating) step the result is a completely alloyed iron-zinc coating referred to with an A designation. Both the A and G designations are a hot-dipped galvanized coating.

Coating Designations

Coating designations are written to represent the coating type, either G or A, and the coating weight. The coating weight is the amount of zinc on the steel surface and is expressed to represent the ounces per square foot of zinc as the total weight on both surfaces of the steel sheet.

Minimum Coating Weights

In a coating weight of 40 there is an average of 0.4 ounces of zinc per square foot of steel, in 60 there is an average of 0.6 ounces of zinc per square foot of steel, and in 90 there is an average of 0.9 ounces of zinc per square foot of steel.

NOTE: Information included in this data sheet is proprietary to CURRIES Company and subject to revision without notification.

Steel Specifications

Average Coating Thickness

The average coating thickness can be estimated from the minimum coating weight specified in the table by using a conversion factor. One ounce of zinc coating per square foot of surface equals an average coating thickness of 0.0017 in. (0.043 mm).

This coating thickness is not significant enough to make an appreciable difference in the measurable thickness of coated or uncoated steel of the same gage. Refer to the following table showing the coating designations, minimum coating weights, and average coating thickness.

The G type coatings have a free zinc spangled surface and may be processed to minimize the size of the spangle resulting in a smooth dull gray appearance. The A type coating has the zinc completely alloyed with the steel sheet and results in a dull gray surface with no spangles that is ready for painting after normal cleaning without further treatment.

Corrosion resistance is directly proportional to coating weight. The heavier the coating weight the more zinc is present and the more corrosion protection it will provide. Therefore, under normal atmospheric conditions a 60 designation will provide 50% more corrosion protection than the 40 designation coating.

Type	Coating Designation	Min. Requirement Triple-Spot Test, ($oz./ft^2$)	Min. Requirement Single-Spot Test, ($oz./ft.^2$)	Coating Designation	Min Requirement Triple-Spot Test, (g/m^2)	Min. Requirement Single Spot Test, (g/m^2)
Regular (Galvanized)	G90[A] G60	0.90 0.60	0.80 0.50	Z275[A] Z180	275 180	235 150
Alloyed (Galvannealed)	A60 A40	0.60 0.40	0.50 0.30	ZF180 ZF120	180 120	150 90

[A]CURRIES' Galvanized product

NOTE: Information included in this data sheet is proprietary to CURRIES Company and subject to revision without notification.

Core Materials

Polystyrene Coreboard Material Specifications (607, 707, and 737)

The polystyrene foam used in the manufacturing of CURRIES' 607 and 707 series doors is a rigid cellular expanded polystyrene bead board that contains no formaldehyde and is chloroflurocarbon (CFC) and hydrochlorofluorocarbon (HCFC) free. This material meets or exceeds the requirements of ASTM C 578, Type I.

Physical Property	Result	ASTM Test Method
Density, minimum lb/ft^3 (kg/m^3)	1.0 (16)	C303 or D1622
Thermal resistance (R-factor/inch) of 1.00 in. (25.4 mm) thickness, min. °F-ft^{2}h/Btu (°K-m^2/W)		C177 or C518
25 °F (-3.9 °C) mean temperature	4.35 (0.76)	
40 °F (4.4 °C) mean temperature	4.17 (0.72)	
75 °F (23.9 °C) mean temperature	3.85 (0.67)	
Compressive resistance at yield or 10% deformation, whichever occurs first (with skins intact), minimum, lb/in^2 (kPa)	10.0 (69)	C161
Flexural strength, minimum, lb/in^2 (kPa)	25.0 (173)	C203
Water vapor permeance of 1.00 in. (25.4 mm) thickness, perm (ng/Pa-s-m^2)	5.0 (287)	E96
Water absorption by total immersion, maximum	4.0 max.	C272
Dimensional stability (change in dimensions), maximum, %	2.0 max.	D2126
Oxygen index, minimum, volume %	24.0	D2863
Flame spread index, maximum	20	E84
Smoke developed index, maximum	150-300	E84
Classification	1	C578

The R-Value at 75° at nominal core thickness is 6.4 (U=0.16)

NOTE: Information included in this data sheet is proprietary to CURRIES Company and subject to revision without notification.

Paint Specifications

Surface Preparation

Commercial hollow metal doors and frames are designed to meet the requirements of ANSI A250.8 (formerly SDI 100) and are to be thoroughly cleaned, and chemically treated to insure maximum paint adhesion. All surfaces of the door and frame exposed to view shall receive a factory baked-on applied coat of rust inhibiting prime paint. CURRIES' products can be provided with prime painted finishes meeting the requirements for acceptance stated in ANSI A250.10, *Test Procedure and Acceptance Criteria for Prime Painted Steel Surfaces*.

Pre-Treatment

An automatic washing system washes, degreases, and phosphatizes CURRIES' hollow metal products. Maximum metal protection is achieved by phosphatizing prior to painting. Phosphatizing etches the metal, providing an effective surface for paint adhesion. The phosphatized metal prevents the paint from lifting and peeling. The non-metallic phosphate coating resists moisture penetration. Maximum rust protection is achieved by combining phosphatized metal with CURRIES' baked-on rust-inhibiting prime paint.

Prime Paint Tests

Requirements of ANSI A250.10 (formerly ANSI A224.1), Test Procedure and Acceptance Criteria for *Prime Painted Steel Surfaces include:*

- Salt spray testing in accordance with ASTM B117
- Condensation (humidity) testing in accordance with ASTM D4585
- Impact test in accordance with ASTM A2794
- Film adhesion test in accordance with ASTM D3359

CURRIES' product can be provided with factory applied baked-on primers complying to the following performance requirements of ANSI A250.10:

Test	Standard	Hours	Results
Salt Spray	ASTM B117	120	Passed
Condensation	ASTM D4585	240	Passed
Impact Test	ASTM D2794	N.A.	Passed
Adhesion	ASTM D3359	N.A.	Passed

CURRIStain Finish

- CURRIStain door coating system meets the requirements of ANSI A250.3 Test Procedure and Acceptance Criteria for Finish Painted Steel Surfaces.

Door/Frame Prime Paint Properties

The lead and chromate free gray primer paint used on CURRIES' doors and frames may be coated over with an alkyd enamel type of paint. Contact the factory for specific information regarding top coats to be applied over these primers.

Physical Property	Door Primer	Frame Primer	Test Method
Solids by weight, (%)	80	70	ASTM D 2369
Solids by volume, (%)	60	55	formula constants
Resin type	Alkyd	2 Component Epoxy	not applicable
Recommended dry film thickness per coat, (mils)	1.0	1.0	ASTM D 1186
Gloss @ 60° light source, (%)	0 (Flat)	15-20	ASTM D 523

NOTE: Information included in this data sheet is proprietary to CURRIES Company and subject to revision without notification.

CURRIES®

ASSA ABLOY

ASSA ABLOY, the global leader
in door opening solutions

Recommended Procedure for Receiving and Storage of Steel Doors and Frames

ARCHITECTURAL TECHNICAL DATA

November, 2010

DELIVERY AND RECEIVING OF MATERIAL:
Upon delivery, all material shall be thoroughly inspected for damage. Should damaged material be found, the General Contractor has the option of refusing delivery or to accept the material as damaged. Any damaged items should be noted on the freight bill. Claims will not be honored by the freight carrier, unless the damaged items are noted on the freight bill at the time of delivery. The General Contractor must telephone or write the local office of the freight carrier and request an inspection of the damage. The contractor shall contact the hollow metal distributor immediately of any item signed for as damage. This procedure will help to expedite the repair or replacement of the damaged items and the processing of the damage claim with the freight carrier.

Should the General Contractor discover any damage or error in the hollow metal delivered to the job site, it is imperative that the hollow metal distributor be notified before initiating any corrective measure in the field, so that the hollow metal distributor and manufacturer can participate in solving the problem. Failure to do so could result in the cancellation of the warranty and/or fire label. If claim is to be made for any error or deficiency in the hollow metal work itself, it is imperative that the hollow metal distributor be notified before initiating any corrective work in the field.

THE CONTRACTOR RESPONSIBLE FOR INSTALLATION SHALL SEE THAT ANY SCRATCHES OR DISFIGUREMENT CAUSED IN SHIPPING OR HANDLING ARE PROMPTLY CLEANED AND TOUCHED UP WITH A RUST INHIBITIVE PRIMER.

ON SITE STORAGE:
Proper storage of hollow metal work at the construction site will help to prevent damage to the primer coat of paint. Prime coated steel must be protected when exposed to the elements, including high humidity, salt, air, and/or damp wrappings.

Particular attention must, therefore, be given to steel products having a shop coat of prime paint. Because the protective shop coat must be porous to properly receive and hold top coats, water or moisture in contact with primer coated steel will seep through to the steel by capillary action. An electrolytic action then follows, resulting in corrosion and causing the paint film to lose adhesion. The presence of oxygen at the water-air interface behind the loosened paint film accelerates corrosive action and the prime coat further deteriorates. **Even when hot-dip galvanizing is used to provide a corrosion resistant base coat on steel, manufacturers of hollow metal doors have found that one week of product exposure to water, because of improper storage, can be equivalent to at least a year of outdoor exposure to the elements.**

NOTE: Paint manufacturers advise that the primer typically used by hollow metal manufacturers should receive a finish coat of paint within 30 days of delivery. It is the responsibility of the General Contractor to sand, touch up and clean prime painted surfaces prior to finish painting in accordance with the finish paint manufacturer's instructions.

The following procedures should always be observed in storing hollow metal doors and frames at the job site:

1. Store all materials in a dry area, under cover. All ferrous metal products should be stored where they will not be exposed to, or come in contact with water. This is particularly true of products such as doors, which have large flat surfaces on which water may collect if they are stacked horizontally.

2. Do not use non-vented plastic or canvas. These materials create a humidity chamber, which promotes blistering and corrosion.

3. Store doors and welded frames in an upright position with heads uppermost. Figures 1 and 2.

4. Place no more than 5 doors or welded frames in a group. Small groups not only minimize the likelihood of damage due to excess handling, but also facilitate selection from the group for installation. In the case of multi-opening frames, no more than three units should be stored in a group, to avoid serious damage to the bottommost frame.

5. Place all material on planking or blocking at least 4 in. (100 mm) off the ground, 2 in. (50 mm) off a paved area or the floor slab.

6. Provide a least 1/4 in. (6.4 mm) space (wood trip) between all units to permit air circulation.

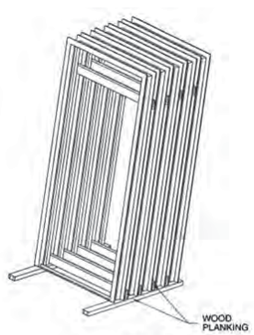

FIGURE 1
FRAME STORAGE

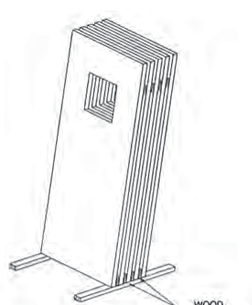

FIGURE 2
DOOR STORAGE

CURRIES

ASSA ABLOY

PRODUCT WARRANTY

We warrant our products against defects in workmanship and materials for a period of one year, as follows:

(a) There are no warranties, expressed or implied, which extend beyond those described herein, and there is no implied warranty or merchantability.

(b) If our products should prove to be defective, our only responsibility will be to either repair or replace the defective item(s), and we will have no liability or obligation for any damages of any kind beyond such repair or replacement.

(c) Our obligation to repair or replace any defective item terminates one year after the product has been delivered by us to the customer, and also terminates at any time anyone other than our company performs any work of repair, service, or replacement on the item without our prior written consent.

(d) We assume no liability to pay any costs of labor or material for repair, service or replacement of any CURRIES product which has been incurred by anyone other than us.

(e) CURRIES is committed to providing the highest quality products and services to its customers as possible. Errors can occur on occasion. We request our distributors to act as “final” quality control on our hollow metal. A simple double check procedure by an assembly person prior to modifying a door or welding a frame should be performed on every unit of product that leaves a distributor’s place of business. This simple action can prevent a considerable amount of potential field problems.

JOB NO. 28142	PROJECT Prince Frederick SHA	LOCATION	

DOOR INDEX

Project ID: 28142 PRINCE FREDERICK SHA PHASE 2

Door Number	Arch Mark	Item Number	Heading #	Keying	Hand
101.0	101.0	1	HW-1		LHR
101.1	101.1	4	HW-3		LHR
103.0	103.0	2	HW-1		LH
104.0	104.0	3	HW-2		LHR
105.0	105.0	5	HW-3		RH
TEMP KEYS	TEMP KEYS	6	HW-4		
CMK TEMP	CMK TEMP	7	HW-5		
CABINET	CABINET	8	HW-6		

Hardware Schedule

Project ID: 28142 - PRINCE FREDERICK SHA PHASE 2

Heading #: HW-1

1	SGL	Door: 101.0	VESTIBULE 101 FROM LINCH RM/CONFERERENCE 104	LHR		90 °
1	SGL	Door: 103.0	VESTIBULE 101 TO KITCHEN 103	LH		90 °

3' 0" x 7' 0" x 1 3/4" HMD/HMF

6 EA	Hinge	TA2714 4-1/2" x 4-1/2"	US26D	(HI-1) McKinney
2 EA	Passage Latch	CL3310 PZD	626	(LO-1) Corbin Russwin
2 EA	Kick Plate	8400 TK-TX 10" x 34"	US26D	(KP-1) Ives
2 EA	Wall Stop	406 TORX	US26D	(ST-1) Rockwood
6 EA	Silencer	608		(SI-1) Rockwood

Heading #: HW-2

1	SGL	Door: 104.0	EXTERIOR FROM LINCH RM/CONFERERENCE 104	LHR		90 °

3' 0" x 7' 2" x 1 3/4" HMD/HMF

1 EA	Continuous Hinge	MCK-14HD 83"	CL	(HC-1) McKinney
1 EA	Rim Exit Device	99L 17 996L(Std) SNB	US26D	(ED-1) Von Duprin
1 EA	Cylinder	12E-62 S2 RP Less Core	626	(CY-1) Stanley Security Solutions Inc (BE)
1 EA	Core	1C72	626	(CY-2) Stanley Security Solutions Inc (BE)
1 EA	Concealed Overhead Holder/Stop	1-336	689	(OH-1) Rixson
1 EA	Surface Closer	4040XP Rw/PA TBTRX	AL	(CL-1) LCN Closers
1 EA	Kick Plate	8400 TK-TX 10" x 34"	US26D	(KP-1) Ives
1 EA	Threshold	425 36"		(TH-1) National Guard
1 EA	Gasketing	S88BL 17' TKSP8		(GA-1) Pemko

Heading #: HW-3

1	SGL	Door: 101.1	EXISTING VEST. 101.1 FROM VESTIBULE 101	LHR		90 °

3' 0" x 7' 0" x 1 3/4" HMD/HMF

1	SGL	Door: 105.0	VENDING ROOM TO KITCHEN 103	RH	90	90 °

3' 0" x 7' 0" x 1 3/4" HMD/HMF (90)

6 EA	Hinge	TA2714 4-1/2" x 4-1/2"	US26D	(HI-1) McKinney
2 EA	Passage Latch	CL3310 PZD	626	(LO-1) Corbin Russwin
2 EA	Surface Closer	4040XP Rw/PA TBTRX	AL	(CL-1) LCN Closers
2 EA	Kick Plate	8400 TK-TX 10" x 34"	US26D	(KP-1) Ives
2 EA	Wall Stop	406 TORX	US26D	(ST-1) Rockwood
2 EA	Gasketing	S88BL 17' TKSP8		(GA-1) Pemko
6 EA	Silencer	608		(SI-1) Rockwood

Heading #: HW-4

1 SGL Door: TEMP KEYS

0" x 0" x 1 3/4" Existing/Existing

1 EA	Key	TEMP KEYS	(OT-2) TO BE DETERMINED
1 EA	Key	PERM KEYS	(OT-3) TO BE DETERMINED

Heading #: HW-5

1 SGL Door: CMK TEMP

0" x 0" x 1 3/4" Existing/Existing

1 EA	Key	TEMP KEYS	(OT-2) TO BE DETERMINED

Heading #: HW-6

1 SGL Door: CABINET

1 EA	Key Cabinet	1200	(OT-1) Lund Equipment Co., Inc.

Hardware Recap

Project ID: 28142
Description: PRINCE FREDERICK SHA PHASE 2
Job Number: 28142

Quantity	Description	Hdw ID
	Corbin Russwin	
4	EA Passage Latch CL3310 PZD 626	LO-1
	Ives	
5	EA Kick Plate 8400 TK-TX 10" x 34" US26D	KP-1
	LCN Closers	
3	EA Surface Closer 4040XP Rw/PA AL TBTRX	CL-1
	Lund Equipment Co., Inc.	
1	EA Key Cabinet 1200	OT-1
	McKinney	
12	EA Hinge TA2714 4-1/2" x 4-1/2" US26D	HI-1
1	EA Continuous Hinge MCK-14HD 83" CL	HC-1
	National Guard	
1	EA Threshold 425 36"	TH-1
	Pemko	
3	EA Gasketing S88BL 17' TKSP8	GA-1
	Rixson	
1	EA Concealed Overhead Holder/Stop 1-336 689	OH-1
	Rockwood	
4	EA Wall Stop 406 US26D TORX	ST-1
12	EA Silencer 608	SI-1
	Stanley Security Solutions Inc (BE)	
1	EA Cylinder 12E-62 S2 RP 626 Less Core	CY-1
1	EA Core 1C72 626	CY-2
	TO BE DETERMINED	
2	EA Key TEMP KEYS	OT-2
1	EA Key PERM KEYS	OT-3
	Von Duprin	
1	EA Rim Exit Device 99L 17 996L(Std) US26D SNB	ED-1

Features

Non-Handed

Door Thickness
1-3/4" (44mm) - 2" (51mm) standard.
Optional: 2"(51mm) - 2-1/4" (57mm); see Quick Codes, page 14.

Lock Chassis
Steel, zinc dichromated for corrosion resistance.

Backset
2-3/4" (70mm) standard.
Optional: 3-3/4" (95mm) and 5" (127mm); see Quick Codes, page 14.

Latchbolt
Stainless Steel, 1/2" (13mm) throw.
Optional: 3/4" (19mm) throw deadlocking fire latch for pair of doors; see Quick Codes, page 14.

Auxiliary Latchbolt

Deadlocking latchbolt prevents manipulation when door is closed.

Front
Wrought brass, bronze, or stainless steel, 2-1/4" (57mm) x 1-1/8" (29mm). Accommodates flat doors and doors beveled 1/8" (3mm) in 2" (51mm).
Optional: rounded corners; see Quick Codes, page 14.

Strike
Wrought brass, bronze, or stainless steel ANSI curved lip standard, 4-7/8" (124mm) x 1-1/4" (32mm) x 1-1/4" (32mm) lip to center.
Optional strikes, lip lengths and ANSI wrought strike box available; see Quick Codes, page 14.

Cylinder
Brass, 6-pin L4 keyway, 0-bitted standard.

Keying Features Available
Master keying
Construction master keying
Visual key control
Concealed key control
Interchangeable core (IC)
Security
Security IC (not available with CL3329)
Pyramid
Pyramid IC

Keys
Two nickel silver standard.

Warranty
Five-year limited.

Classroom Security

The CL3352 Classroom Intruder function lockset allows locking of the outside lever from either side with the key. In a panic situation, the Key Turn Indicator serves as a quick reference for locking the door. And egress is always possible with the "anti-panic" feature, which keeps the outside lever locked if the inside lever is activated.

Certification/Compliance

ANSI
Meets A156.2 Series 4000, Grade 1.
Meets A117.1 Accessibility Code.

Federal
Meets FF-H-106C.

California State Reference Code
(Formerly Title 19, California State Fire Marshal Standard)
All levers with returns comply; levers return to within 1/2" (13mm) of door face.

C-UL US
All locks with 1/2" (13mm) throw latchbolt listed for A label and lesser class 4' x 10' single doors. All locks with 3/4" (19mm) throw latchbolt listed for A label and lesser class 8' x 10' pairs of doors. Letter F and UL symbol on latch front indicate listing.

Finishes

BHMA 605*	Bright Brass, PVD
BHMA 606*	Satin Brass, PVD
BHMA 611	Bright Bronze
BHMA 612	Satin Bronze
BHMA 613	Dark Oxidized Satin Bronze, oil rubbed
BHMA 625	Bright Chromium Plated
BHMA 626	Satin Chromium Plated

Zinc levers are plated to match BHMA finish.

*Infini-T® PVD finish standard on 605 and 606

Infini-T®

Infini-T is a technologically advanced finish produced by a coating process called Physical Vapor Deposition (PVD). *Infini-T* provides the ultimate surface protection against the elements and everyday wear and tear.

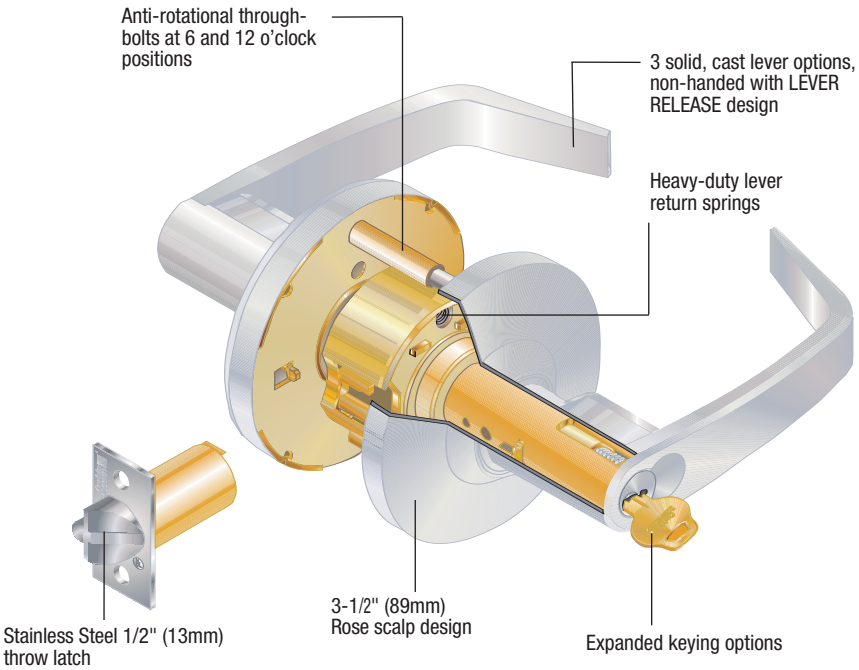

Latches

To order optional latch with lockset, see Quick Codes, page 14.
To order latch separately, specify Part No. x Finish (e.g., 586F16 x 626).

Backset and Front Description	Plain For CL3310, CL3380, CL3390	Deadlocking	Throw-Off For CL3320, CL3329, CL3340, CL3393	3/4" (19mm) Throw Deadlocking Fire Latch for Pair of Doors
2-3/4" (70mm) Backset				
Square corner front, 2-1/4" (57mm) x 1-1/8" (29mm)	586F16	586F17	586F18	601F69 (Not available for CL3320, CL3329, CL3340, CL3393) 605, 606, 612, 613, and 626 finishes available
Rounded corner front, 2-1/4"(57mm) x 1-1/8" (29mm)	596F66	596F67	596F68	Not available
3-3/4" (95mm) Backset				
Square corner front, 2-1/4" (57mm) x 1-1/8" (29mm)	586F80	586F81	586F82	Not available
Rounded corner front, 2-1/4" (57mm) x 1-1/8" (29mm)	586F86	586F87	586F88	Not available
5" (127mm) Backset				
Square corner front, 2-1/4" (57mm) x 1-1/8" (29mm)	598F20	598F21	598F22	Not available
Rounded corner front, 2-1/4" (57mm) x 1-1/8" (29mm)	601F24	601F25	601F26	Not available

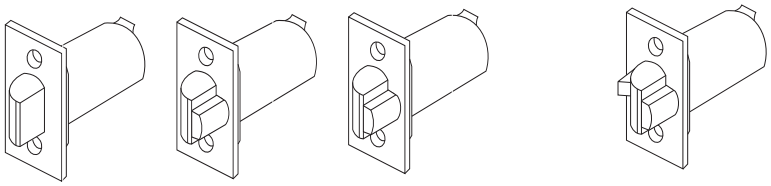

Strikes

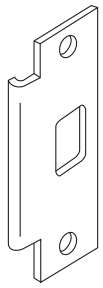

ANSI Curved Lip (standard)

Brass, bronze, or stainless steel, 4-7/8" (124mm) x 1-1/4" (32mm) x 1-1/4" (32mm) lip to center.
Optional lip lengths: 1" (25mm), 1-1/8" (29mm), 1-3/8" (35mm), 1-1/2" (38mm), 1-3/4" (44mm), 2" (51mm), 2-1/4" (57mm), 2-1/2" (64mm), 2-3/4" (70mm), 3" (76mm).
To order with lockset, see Quick Codes, page 14.
To order separately, specify 217L13 x Lip Length x Finish.

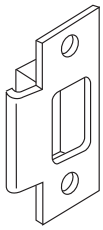

Curved Lip Box

Brass or bronze
2-3/4" (70mm) x 1-1/8" (29mm) x 1-1/4" (32mm) lip to center.
Optional lip lengths: 1" (25mm), 1-1/8" (29mm), 1-3/8" (35mm), 1-1/2" (38mm), 1-3/4" (44mm), 2" (51mm), 2-1/4" (57mm), 2-1/2" (64mm), 2-3/4" (70mm), 3" (76mm).
To order with lockset, see Quick Codes, page 14.
To order separately, specify 586L19 x Lip Length x Finish.

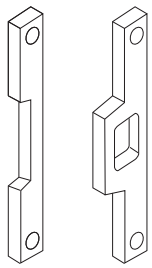

Rabbeted Front and Strike

Brass or bronze 4" (102mm) x 5/8" (16mm) for 1/2" (13mm) rabbet.
No optional lip lengths.
To order with lockset, see Quick Codes, page 14.
To order separately, specify 601F28 x Finish.

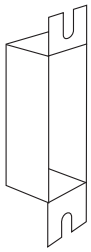

ANSI Wrought Strike Box

To order with lockset, see Quick Codes, page 14.
To order separately, specify 120F76-8.

Extra Heavy-Duty Cylindrical Lever Locksets
CL3300 Series

Functions

Outside / Inside	Series/ Function	Type	ANSI No. Series 4000	Function Description
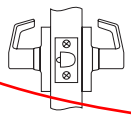	CL3310	Passage or Closet	F75	- Latchbolt by lever either side. - Both levers always free.
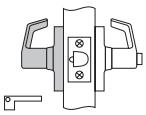	CL3320	Privacy, Bedroom or Bathroom	F76	- Throw-off latchbolt by lever closing door or by turning inside lever. - Outside lever locked by push button. (Lever handle is freewheeling in locked position.) - Outside lever unlocked by emergency release tool outside, by rotating inside lever or by closing door. - Inside lever always free.
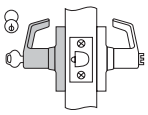	CL3329	Hotel or Motel	F93	- Throw-off latchbolt by lever inside or by key outside. - Push button shuts out all keys except emergency key, and projects occupancy indicator in face of cylinder. (Lever handle is freewheeling in locked position.) - Push button released by turning inside lever or by closing door.* - Outside lever always locked. - Inside lever always free.
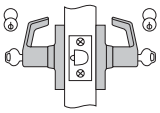	CL3332	Institutional or Utility	F87	- Deadlocking latchbolt by key either side. (Lever handle is freewheeling in locked position.)
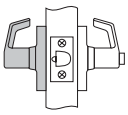	CL3340	Patio or Privacy	F77	- Throw-off latchbolt by lever closing door or by turning inside lever. - Outside lever locked by push button. (Lever handle is freewheeling in locked position.) - Inside lever always free. - Should not be used in rooms that have no other entrance.
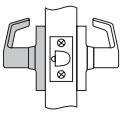	CL3340NT	Exit Latch	F89	- Deadlocking latchbolt by lever inside. - Outside lever always locked. (Lever handle is freewheeling.) - Inside lever always free.
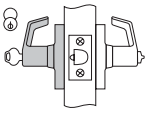	CL3351	Entrance or Office	F109	- Deadlocking latchbolt by lever either side, except when turn button locks outside lever. Pushing turn button in locks outside lever, requiring use of key outside to unlock. (Lever handle is freewheeling in locked position.) - Turning inside lever unlocks outside lever. - Pushing in and turning button locks outside lever, requiring key at all times. Turning inside lever does not unlock outside lever until button is manually turned to unlocked position. - Inside lever always free.
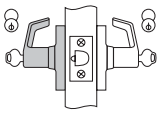	CL3352	Classroom Intruder	—	- Latchbolt is operated by rotating the inside lever, or rotating the outside lever only when not locked from the inside or outside by key. - Outside lever is locked and unlocked by turning the key in the inside or outside lever. - Inside lever cannot be locked.
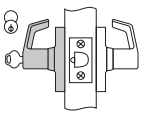	CL3355	Classroom	F84	- Deadlocking latchbolt by lever either side, except when key outside locks outside lever. (Lever handle is freewheeling in locked position.) - Outside lever unlocked by key outside. - Inside lever always free.
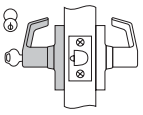	CL3357	Storeroom or Closet	F86	- Deadlocking latchbolt by key in outside lever or by rotating inside lever. (Lever handle is freewheeling in locked position.) - Inside lever always free.
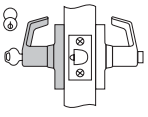	CL3361	Entry or Office	F82	- Deadlocking latchbolt by lever either side, except when push button locks outside lever. - Push button released by turning inside lever or by key in outside lever. (Lever handle is freewheeling in locked position.) - Closing door does not release push button. - Inside lever always free.

Indicates optional interchangeable core available; see Quick Codes, page 14.

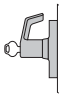 Indicates freewheeling lever in locked position.

*Unless push button has been fixed in locked position by spanner key (furnished). When push button is fixed by spanner key, lock is operable only by emergency key or by display key.

Armstrong

AZD

Lever: Die cast zinc
Rose: Wrought brass or bronze

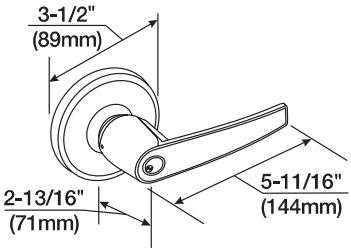

Newport

Complies with codes requiring lever to return to within 1/2" (13mm) of door face.

NZD

Lever: Die cast zinc
Rose: Wrought brass or bronze

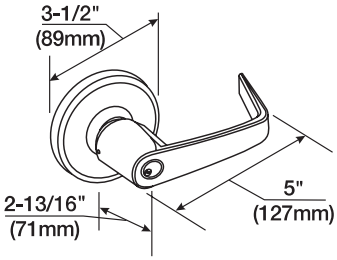

Princeton

Complies with codes requiring lever to return to within 1/2" (13mm) of door face.

PZD

Lever: Die cast zinc
Rose: Wrought brass or bronze

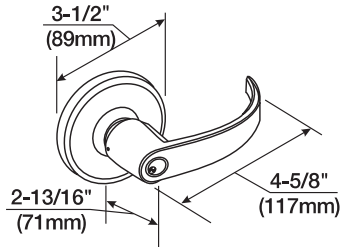

KP-1

8400 Series Protection Plates

- Door protection plates are available in .050" thick brass, stainless steel or aluminum; and 1/8" thick high impact polyethylene in clear or black.
- Bevel edge options; specify B4E for all four edges.
- Mounting screw pack furnished standard, 16 screws per pack. Optional screw packs are available for TEK or TORK screw heads. Refer to the following chart for ordering.
- Specify NMH for no mounting holes. (Not available on 8402)
- Specify NMH-A for no mounting holes with adhesive. (Not available on 8402)
- Specify CS for counter sunk mounting holes.
- Specify ERS prepped with extra row of screws.

Kickplate Gasket Tape Tape is recommended when using a brass plate on a metal door to reduce tarnishing from electrolytic oxidation. One tape pack will cover an the perimeters of a 8" x 34" kickplate. Order 8401 Gasket Tape.

8400 Protection Plate
8402 (UL)* Protection Plate

**UL mark appears in upper right corner. Factory supplied screws must be used.*

Number of screw packs required by plate size (specify TEK Screws or TORK screws).

	22"-25"	26"-33"	34"-41"	42"-48"
4"-8"	1	1	1	1
9"-16"	1	1	1	1
17"-24"	1	1	1	2
25"-32"	1	1	2	2
33"-40"	1	2	2	2
41"-48"	2	2	2	2

Finishes *brass 24" x 48" max. size*

US Number	US3	US4	US10	US10B	US15	US26	US26D
BHMA	605	606	612	613	619	625	626

Finishes *stainless steel*

US Number	US32	US32D
BHMA	629	630

Finishes *aluminum*

US Number	US28
BHMA	628

Finishes *plastic*

Clear and Black

Residential Grade Kickplates available Carded only, finishes PA28, PA3, PA619, PA716, B3, B505, B619, B716

CL-1

4040XP Series

Features

The 4040XP is LCN's most durable and flexible heavy duty closer designed for institutional and other demanding high traffic applications.

Certifications	Grade 1 - ANSI A156.4, UL 10C, ADA, 100 Hour Salt Spray, Meets BAA - Buy American Act
Body Construction	▪ Cast Iron Body ▪ Full Complement Bearings ▪ 1-1/2″ Diameter Piston ▪ 3/4″ Diameter Double Heat Treated Pinion Journal
Fluid	All Weather Liquid X Fluid
Handing	Non-Handed
Templating	Peel-n-Stick templates - 2-1/4″ x 5″ Mounting Hole Pattern
Size	Adjustable Spring Size 1-6, includes Patented Green Dial
Warranty	30 years

Cover	▪ Plastic, Standard ▪ Metal, Optional
Fasteners	Self Reaming and Tapping Screws (SRT)
Mounting	Hinge (Pull Side), Top Jamb (Push Side), Parallel Arm (Push Side)
Arms	Regular Arm
Finishes/Colors/ Powder Coat	▪ Aluminum (689) ▪ Statuary Bronze (690) ▪ Light Bronze (691) ▪ Black (693) ▪ Dark Bronze (695) ▪ Brass (696) ▪ Custom colors optional ▪ Optional SRI primer - powder coat only ▪ Optional plated finishes

Special Templates | Customized installation templates or products may be available to solve unusual applications. Contact LCN Product Support for assistance.

MOUNTING					FINISH		COVER		CYLINDER					*ARM FUNCTION							
HINGE (PULL) SIDE	TOP JAMB (PULL)	TOP JAMB (PUSH)	PARALLEL ARM	STOP FACE	POWDER COAT	PLATED	PLASTIC	METAL	NON-HANDED	NON-SIZED	ACCESSIBILITY	DELAYED ACTION***	AVB**	REGULAR (DOUBLE)	STANDARD (SINGLE)	HOLD-OPEN	FUSIBLE LINK	EDA/HEDA	CUSH/HCUSH	SCUSH/SHCUSH	DOUBLE EGRESS
●	○	●	●	○	●	●	●	●	●	●	♿	●	○	180°	○	180°	○	180°	110°	110°	○

● AVAILABLE
○ NOT AVAILABLE

♿ *Closer available with less than 5.0 lbs. opening force on 36″ door.*
* *Maximum opening/hold-open point with standard template.*
** *Advanced Variable Backcheck.*
*** *Delay feature incorporates standard 4040 cylinder (not XP).*

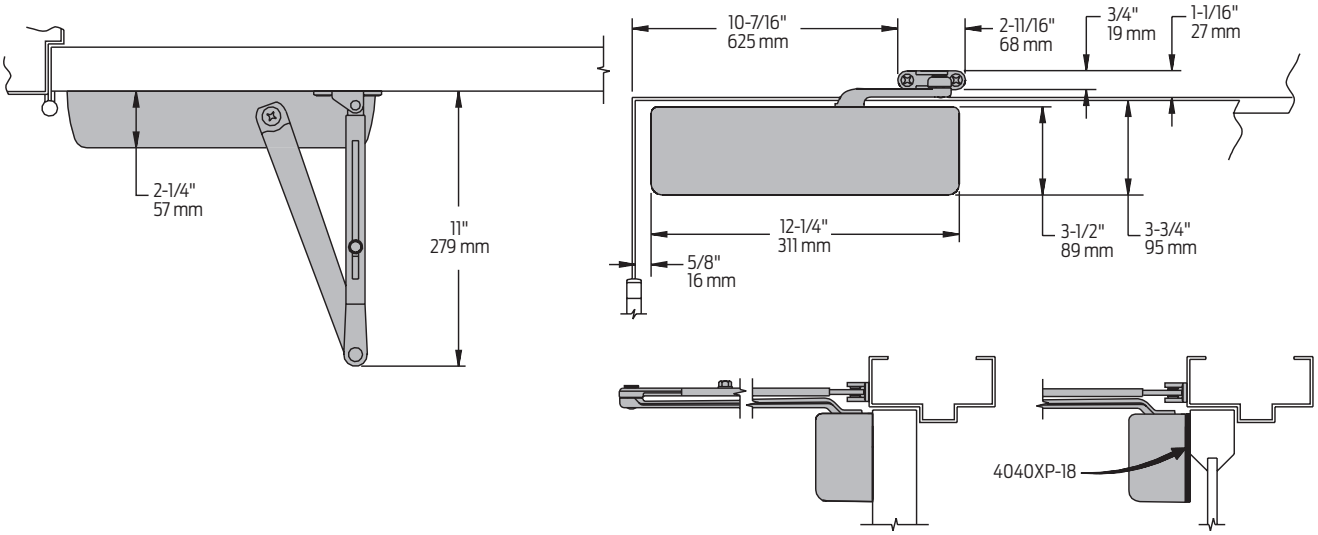

Butt Hinges	■ Should not exceed 5″ (127 mm) in width
Auxiliary Stop	■ Recommended at hold-open point or where a door cannot swing beyond 120°
Reveal	■ Should not exceed 3/4″ (19 mm) for regular arm or hold-open arm
Top Rail	■ Less than 3-3/4″ (95 mm) requires PLATE, 4040XP-18. Plate requires 2″ (51 mm) minimum
Clearance	■ 2-3/8″ (60 mm) behind door required for 90° installation
Delayed Action	■ Incorporates standard 4041 cylinder, without XP cylinder ■ Delays closing from 120° to 70° ■ Delay time adjustable up to approximately 1 minute
Maximum Opening	■ Templating allows up to 120°. ■ Hold-open points 90° up to 120° with hold-open arm.

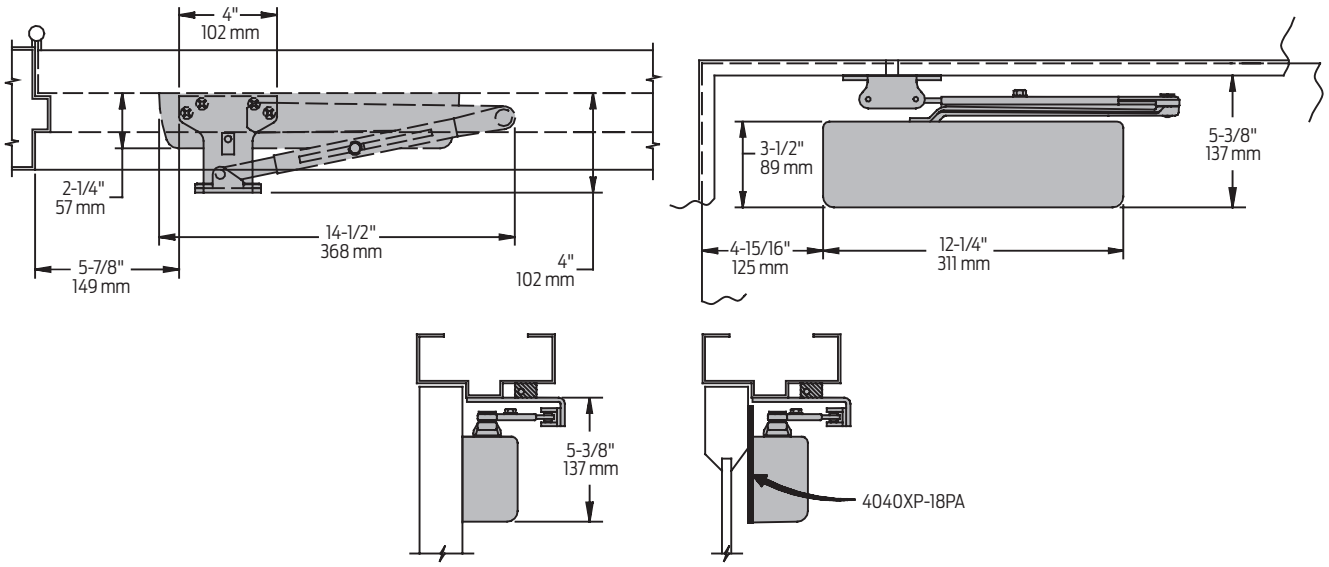

Butt Hinges	Should not exceed 5″ (127 mm) in width
Auxiliary Stop	Recommended at hold-open point, where the door cannot swing 180º, or where CUSH-N-STOP arm is not used
Reveal	Should not exceed 7/32″ (6 mm)
Top Rail	Less than 5-3/8″ (137 mm) measured from the stop requires PLATE, 4040XP-18PA. Plate requires 2″ (51 mm) minimum from the stop
Head Frame	Flush or rabetted requires PA SHOE ADAPTER, 4040XP-419
Stop Width	Minimum 1″ (25 mm). CUSH arm requires minimum 1-1/2″ (38 mm)
Blade Stop	Clearance requires 1/2″ (13mm) BLADE STOP SPACER, 4040XP-61.
Clearance	■ 4040XP-62PA shoe is 4″ (102 mm) from door face. ■ EDA shoe projects 5-1/2″ (140 mm) from door face. ■ CUSH shoe projects 6″ (152 mm) from door face
Delayed Action	■ Incorporates standard 4041 cylinder, without XP cylinder ■ Delays closing from 120º to 70º. ■ Delay time adjustable up to approximately 1 minute.
Maximum Opening	■ 180º opening/hold-open points with all except CUSH arms ■ 110º opening/hold-open with CUSH arms

Notes:

• Optional mounting requires PA SHOE, 4040XP-62PA for regular or HOLD-OPEN arms

• Add prefix "P" to closer description (eg. P4040XP)

• P4040XP closer includes 4040XP-201 FIFTH HOLE SPACER to support PA SHOE

Lund Deluxe WALL CABINETS
with TWO Tag Key System

OT-1

A book index (No. 511-B) is furnished with all Lund Deluxe Wall Cabinets with the Two Tag Key System. This index is to be filed in the office letter file cabinet for key security.
Panel hooks and key tags are numbered consecutively from No. 1 up. Hooks on panels are 1/2" long and tapered. Wall cabinets are made from 18 gauge office furniture steel with electrically welded construction.

Finish is light office gray baked-on enamel. Doors have plated cylinder locks and continuous piano type hinges.
Cabinets can be furnished with dual locks and combination locks as a special feature at extra cost.
Index pockets on the door can also be furnished as a special feature at extra cost.

TWO Tag Key System

See Catalog Page 4 for Two Tag Key System. See Catalog Page 15 for Color Tags.

SPECIAL: Your present cabinet may be expanded. See Page 4 in Price List.

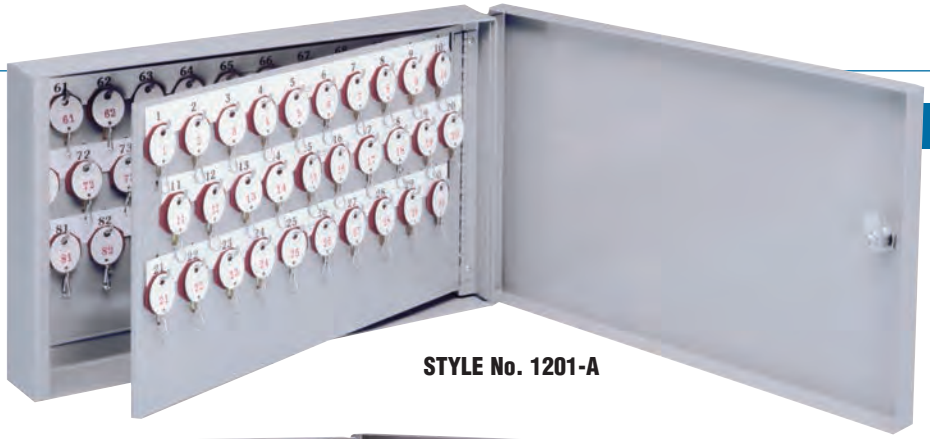

STYLE No. 1201-A

WALL KEY CABINETS

Size 17-3/4"W x 11"H x 2-1/2"D

No. 1200 - 30 cap.
Expand up to 90 cap.

No. 1201 - 60 cap.
Expand up to 90 cap.

No. 1201-A - 90 cap.
No expansion.

No. 1201-B - 120 cap.
No expansion.

STYLE No. 1204-A

WALL KEY CABINETS

Size 17-3/4"W x 25"H x 2-1/2"D

No. 1202 - 130 cap. Expand up to 300 cap.

No. 1203 - 160 cap. Expand up to 300 cap.

No. 1203-A - 200 cap. Expand up to 300 cap.

No. 1204 - 250 cap. Expand up to 300 cap.

No. 1204-A - 300 cap. No expansion.

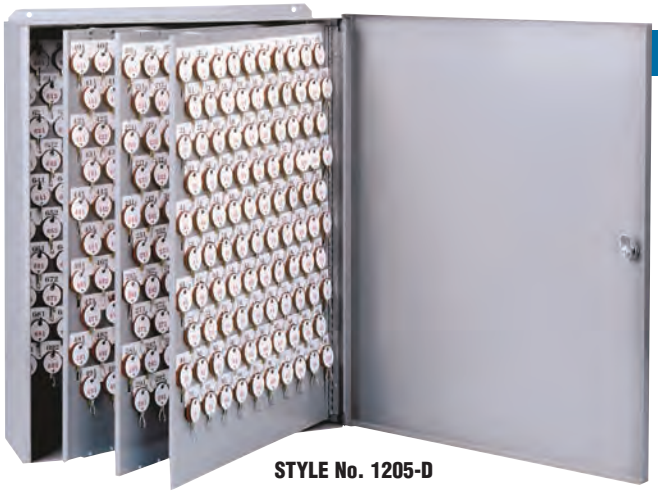

STYLE No. 1205-D

WALL KEY CABINETS

Size 19-3/4"W x 25"H x 5"D

No. 1205 - 350 cap. Expand up to 700 cap.

No. 1205-A - 400 cap. Expand up to 700 cap.

No. 1205-AA - 450 cap. Expand up to 700 cap.

No. 1205-B - 500 cap. Expand up to 700 cap.

No. 1205-C - 600 cap. Expand up to 700 cap.

No. 1205-D - 700 cap. No expansion.

One Tag Key System
with Lund Deluxe Line Key Cabinets

The Lund One Tag System is inexpensive and easy to install. Unlike the Two Tag Key System, there are no numbers on the key tag hooks.

The key tags automatically number the key hooks in the cabinet. The following items are included with the One Tag Key System.

No. 507 Tag
FULL SIZE

NUMBERED KEY TAGS WITH SNAP ON LINKS

These tags are made of vulcanized fibre, 3/64" thick. Words are die stamped. Numbers are die stamped and filled. Standard numbers are consecutive up to 4 digits.

PLEASE NOTE: NUMBERED #507 AND BLANK TAGS ARE FURNISHED IN RED FIBRE UNLESS OTHERWISE SPECIFIED. LINKS ARE INCLUDED.

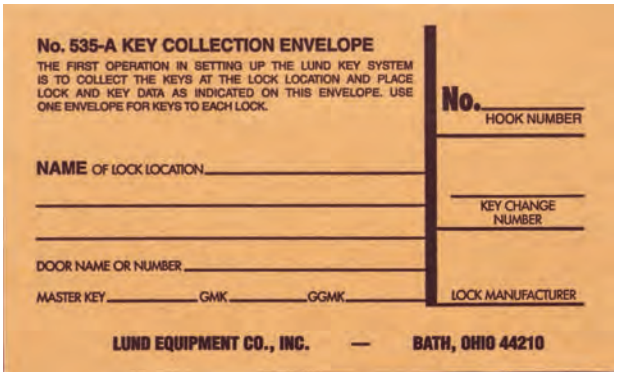

KEY COLLECTION ENVELOPE No. 535-A

This envelope is used for collecting keys. One envelope is used for the keys to each lock. Envelope is 5" x 3".

INDEX CARDS

No. 511-1 **Numerical Index Card.**
Printed in Red. Capacity for 56 keys.

No. 511-2 **Alphabetical Index Card.**
Printed in Green. Capacity for 112 keys.

No. 511-3 **Key Change Number Index Card.**
Printed in Blue. Capacity for 112 keys.

OPTION: Book Index #511-B may be furnished in place of Index Cards at an extra charge.

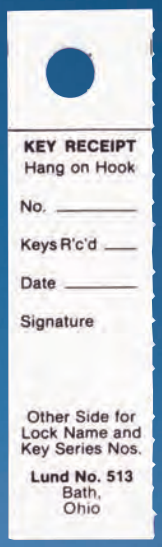

FULL SIZE

KEY RECEIPT CARDS

The receipt card is hung on the key hook under the keys and contains key and lock information. One receipt card is furnished for each key hook.

No. 513 Key Receipt Card

Two Tag Key System
with Lund Deluxe Line Key Cabinets

With the Lund Two Tag Key System, all key hooks are numbered consecutively. The following items are included with the Two Tag Key System.

NUMBERED SECURITY KEY TAGS

This is a one-piece tag with an open loop brass link. The link is an integral part of the tag. The tag is made from 3/64" vulcanized fibre and is 1-1/4" octagonal shape. Words are die stamped. Numbers are die stamped and filled. Standard numbers are consecutive up to 4 digits. Keys are attached instantly and locked securely to the tag with No. 517 Link Sealing Pliers.

PLEASE NOTE: NUMBERED AND BLANK #508-A TAGS ARE FURNISHED IN RED FIBRE UNLESS OTHERWISE SPECIFIED.

No. 508-A Security Key Tag
FULL SIZE

Note: Plastic color tags No. 508-AC or No. 504-C can be substituted for the regular fibre tags at extra charge.

There are multiple colors to choose from: red, blue, white, brown, yellow, orange, green, black and others. Color tags are used to designate buildings, floors, rooms, etc. See page 15.
5 digit numbers available at extra charge.

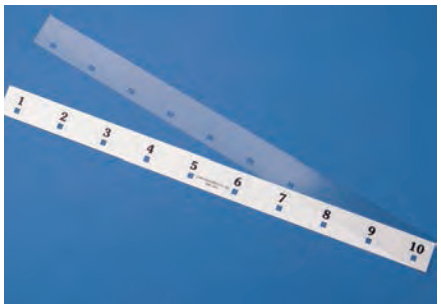

KEY HOOK LABELS AND LABEL SHIELDS

Key Hook Label No. 530 with Vinyl Label Shield No. 530-B

No. 517
Link Sealing Pliers

NUMBERED DUPLICATE TAGS

These are made of 3/64" vulcanized fibre, 1-1/8" oval shaped. Words are die stamped. Numbers are die stamped and filled. Tags have a nickel plated snap-on link. Standard numbers are consecutive up to 4 digits. 5 digit numbers available at extra cost.

No. 504
Duplicate Key Tag
FULL SIZE

KEY RECEIPT CARDS

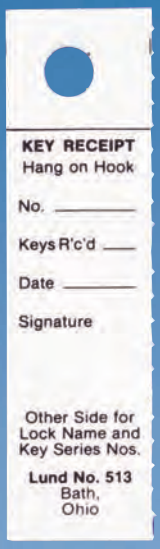

FULL SIZE

The receipt card is hung on the key hook under the keys and contains key and lock information. One receipt card is furnished for each key hook.

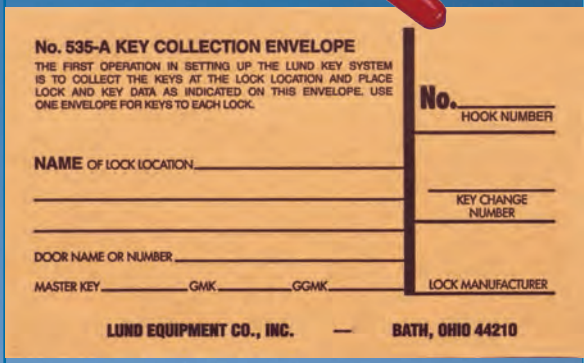

KEY COLLECTION ENVELOPE No. 535-A

This envelope is used for collecting keys. One envelope is used for the keys to each lock. Envelope is 5" x 3".

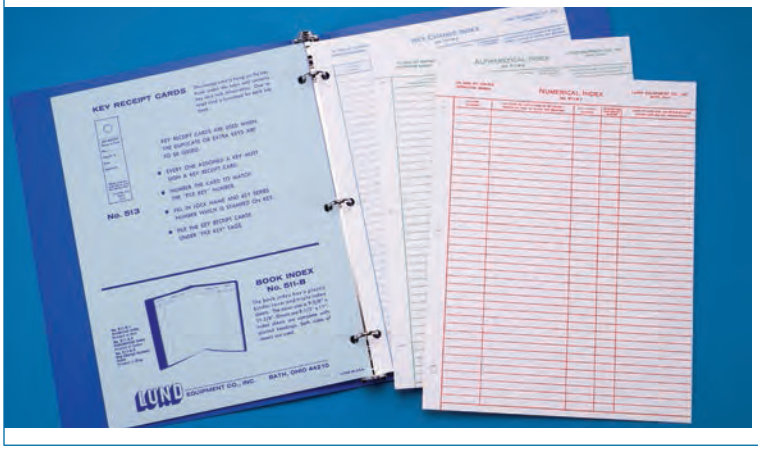

BOOK INDEX No. 511-B

The book index has a vinyl binder cover and triple index sheets. The cover size is 9-3/8" x 11-5/8". Sheets are 8-1/2" x 11". Index sheets are complete with printed headings. Both sides of sheets are used. 75 entries per page.

No. 511-B-1
Numerical Index
Printed in Red.
No. 511-B-2
Alphabetical Index
Printed in Green.
No. 511-B-3
Key Change Number Index
Printed in Blue.

Five Knuckle Standard Weight Series

Recommended for standard weight, medium frequency doors, or doors with closing devices.

- Use for common flush door/frame/wall applications
- For Beveled Edge, where doors are beveled on hinge side, specify TA4314 or TA4714
- For available finishes see page 29

TA2314
TA2714

No.	ANSI Cross Reference	Base Material	Weight
TA2314	A5112	Stainless	STD
TA2314	A2112	Brass	STD
TA2714	A8112	Steel	STD

Application

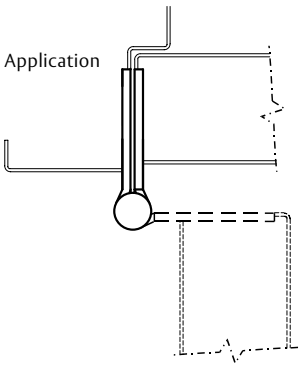

Specifications

				Fasteners	
Inches	**mm**	**Gauge**	**No. of Holes**	**Machine**	**Wood**
3 1/2" x 3 1/2"*	88.9 x 88.9	.123	6	1/2 x 10-24	1 x 10
4" x 4"*	101.6 x 101.6	.130	8	1/2 x 12-24	1 1/4 x 12
4 1/2" x 4"	114.3 x 101.6	.134	8	1/2 x 12-24	1 1/4 x 12
4 1/2" x 4 1/2"	114.3 x 114.3	.134	8	1/2 x 12-24	1 1/4 x 12
5" x 4 1/2"*	127 x 114.3	.146	8	1/2 x 12-24	1 1/4 x 12
5" x 5"*	127 x 127	.146	8	1/2 x 12-24	1 1/4 x 12
6" x 6"*	152.4 x 152.4	.160	10	1/2 x 1/4-20	1 1/2 x 14

* Not available in Brass base material.

Options:

Code	Description
NRP	Non-Removable Pin
TB	Ball Bearing
TCA	Concealed Bearing
RC	Round Corner – 1/4" radius furnished unless specified otherwise
HT	Hospital Tip
BT	Ball Tip
ST	Steeple Tip
SSF	Safety Stud Feature
QC	ElectroLynx® Hinge – 2, 4, 6, 8, 10 or 12 wire available
CC	Concealed Circuit – 2, 4, 6, 8, 10 or 12 wire available
CC-18	Concealed Circuit – 2, 4, 6, 8 or 10 wire available (2-18AWG wires and the remainder 28AWG wires)
MM	Magnetic Monitoring

Copyright © 2012, 2015, McKinney Products Company, an ASSA ABLOY Group company. All rights reserved.
Reproduction in whole or in part without the express written permission of McKinney Products Company is prohibited.

MCK-14HD Series

HC-1

Recommended for new construction and renovations including new door and frame, new door with existing frame or existing door with new frame. Designed for use on retrofit applications and allows for adjustment in order to properly align the lock edge of the door to the frame.

- Designed for use with doors which are the standard 1 3/4" up to 2 1/4" thick
- Extruded 6063-T6 aluminum alloy/temper with pinless assembly
- Special hinge reinforcements are not required. Hollow metal door and frame manufacturers' standard is acceptable. Removal of hinge reinforcements in the door and frame is not advised. If hinge reinforcements are left in place, hinge fillers are needed before installation of hinge
- 79", 83", 85", 95" and 120" lengths are standard for nominal door heights
- May be field-cut to exact door heights and also may be ordered in custom lengths. Consult the factory for minimum requirements on custom sizes
- Standard Fasteners are Custom #12-24 x 11/16" FHUC, Type C, self-drilling screws. Wood screws are available upon request
- Designed for use with hollow metal frames, where the inset conforms to S.D.I. specifications for aligning doors and frames
- Available in custom lengths (specify handing and length in inches) and custom finishes (consult factory for availability)
- The Molex connectors or electrically modified hinges are guaranteed for five years

10C

c UL us LISTED DOOR HINGE 76Y2

MCK-14HD

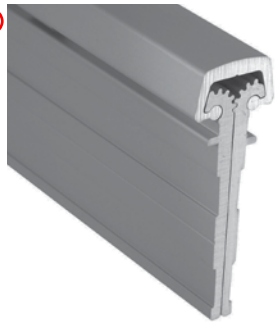

Short Leaf Inset Application

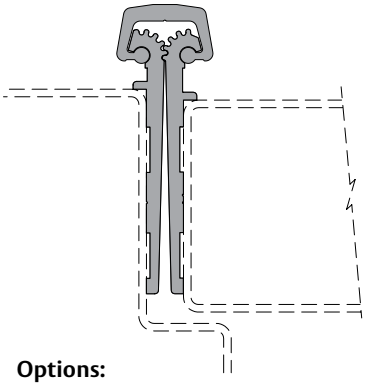

Finishes

Code	Description
CL	Clear anodized aluminum
BZ	Dark anodized aluminum
G	Gold anodized finish
BL	Black anodized finish

Door Size	Hinge Length
6' 8"	79"
7' 0"	83"
7' 2"	85"
8' 0"	95"
0' 0"	20"

Options:

Code	Description
HT	Hospital Tip
FP	Fire Pins
MM	Magnetic Monitoring
PT	Power Transfer Prep (cut out only) for Adams Rite, Securitron, Yale, Dorma, Centurion, PEMKO*
EPT	Power Transfer Prep (cut out only) for Von Duprin, Securitron, PEMKO*
LPT	Securitron, Adams Rite, PEMKO

Refer to catalog pages EH-7 for additional information on our electrical options.

* PT, EPT, LPT Location Form must accompany your order.

ASSA ABLOY

The global leader in door opening solutions

Copyright © 2012, 2015, McKinney Products Company, an ASSA ABLOY Group company. All rights reserved.
Reproduction in whole or in part without the express written permission of McKinney Products Company is prohibited.

Saddle Thresholds

All thresholds this page

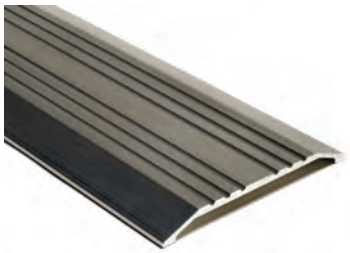

TH-1

211 .43 lbs./ft.
211DKB .43 lbs./ft. Typical Wall .125
3" x 3/8"

424 .61 lbs./ft.
424DKB .61 lbs./ft. Typical Wall .125
4" x 1/2"

425 .88 lbs./ft.
425DKB .88 lbs./ft. Typical Wall .162
5" x 1/2"

426 1.00 lbs./ft.
426DKB 1.00 lbs./ft. Typical Wall .175
6" x 1/2"

427 1.16 lbs./ft.
427DKB 1.16 lbs./ft. Typical Wall .188
7" x 1/2"

8475 1.90 lbs./ft.
8475DKB 1.90 lbs./ft. Typical Wall .250
7 1/2" x 1/2"

525 .93 lbs./ft.
525DKB .93 lbs./ft. Typical Wall .188
5" x 5/8"

MATERIALS & FINISHES

- Aluminum mill finish
- DKB - Aluminum dark bronze finish
- Optional: Slip Resistant SIA Finish

FASTENERS

#10 x 1-1/2" FH zinc plated wood screws furnished. Dark bronze supplied with DKB thresholds.

Kerf-In Weatherstrip (Cont.)

PK52_

AVAILABLE FINISHES: **BL, W**
ANSI: **R0G154**
AVAILABLE LENGTHS: **18', 20', 300'**

- Minimum space between the door face and the stop is 1/16"; maximum space is 3/8"

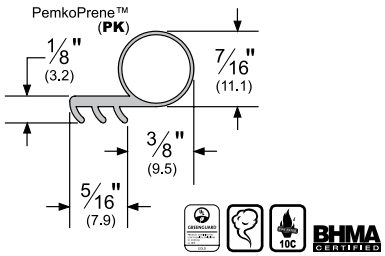

P50_

AVAILABLE FINISHES: **BL, W**
AVAILABLE LENGTHS: **17', 25', 250'**

- Minimum space between the door face and the stop is 1/16"; maximum space is 5/16".
- Thermoplastic elastomer formulation will not transmigrate; remains flexible to -60° F

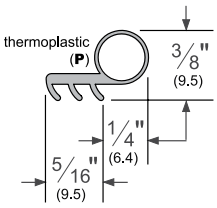

MAG349_

AVAILABLE FINISHES: **D, W**
AVAILABLE LENGTHS: **37", 85", 96", 121"**

- Minimum space between the door face and the stop is 3/8"; maximum space is 7/16"
- Magnetic kerf-in weatherstrip features a magnetic strip encased by a UV-stable TPE cover
- Use for steel-faced door and wood frame applications
- Can be trimmed in the field and corner-mitered

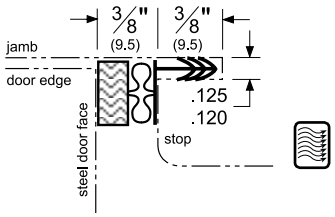

Magnetic Kerf-In Weatherstrip

2815_M

AVAILABLE FINISHES: **C, D, G**
REPLACEMENT INSERT: **2815MAG**

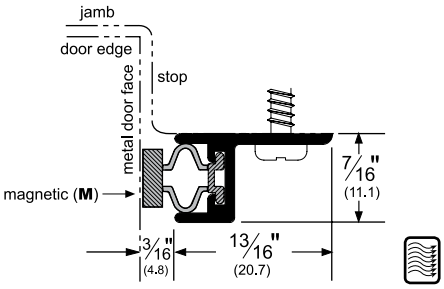

Adhesive Perimeter Gasketing

GA-1

For more information on these perimeter gasketing products, please see the Adhesive Gasketing section.

S773_

AVAILABLE FINISHES: **BL, D, GR, W**
AVAILABLE LENGTHS: **17', 18', 20', 21', 25', 30', 250', 500'**
ANSI: **R0E154, R0E155**

- Triple-fin design blocks light and sound from infiltrating a room
- Product designed as hospitality gasketing (see more hospitality products in the Hospitality Products section)
- Seal begins compressing at 3/8"; compresses to seal up to a 1/16" gap

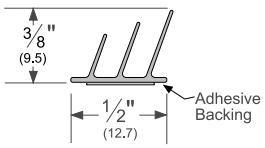

S88_

AVAILABLE FINISHES: **BL, C, D, GR, TAN, W**
AVAILABLE LENGTHS: **17', 18', 20', 21', 25', 30', 204', 510'**
ANSI: **R0E154, R0E155**

- Seal begins compressing at 1/4"; compresses to seal up to a 1/16" gap
- Available with perforations for Behavioral Health applications. Substitute "P" in place of "S" to order this option.

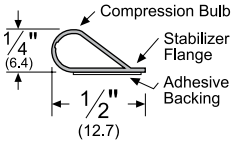

S44_

AVAILABLE FINISHES: **BL, C, D, GR, W**
AVAILABLE LENGTHS: **17', 18', 20', 21', 25', 30', 204', 510'**
ANSI: **R0E154, R0E155**

- Designed for tighter frames.
- Demonstrates extremely low closing force.
- Seal begins compressing at 5/16"; compresses to seal up to a 1/16" gap
- Available with perforations for Behavioral Health applications. Substitute "P" in place of "S" to order this option.

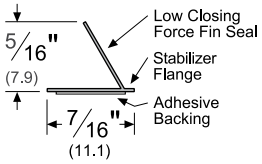

NOTE: Products shown in this section may not be drawn to scale.
AVAILABLE FINISHES FOR PRODUCTS SHOWN ON THIS PAGE (see General Information section for finish chart)
Adhesive Gasketing Colors: **BL** (Black) **C** (Clear) **D** (Dark Brown) **GR** (Light Gray) **TAN** (Tan) **W** (White)

Concealed Mount – Interior or Exterior – High Traffic Doors

Product Description & Features

- Doors may be single or double acting
- Non-handed
- Slide track design
- Recommended for high traffic, heavy abuse installations
- Heavy shock absorber spring provides 5 -7° compression before dead stop
- LS option omits spring for special applications
- Surface on/off knob on hold open models
- Stop, friction stay or hold open functions
- Complete screw packet for installation in wood and machine screws for door and frame.
- For security areas, Torx® screws available for exposed fasteners
- Standard architectural finishes
- Durable slider cam and shock block
- 110° maximum opening
- 1-3/4" minimum door thickness, for thicker doors, note thickness when ordering
- 1-3/16" square channel
- Stop function UL listed for fire door assemblies
- Hanging means other than standard butts or offset pivots require special templating and pricing. Consult factory

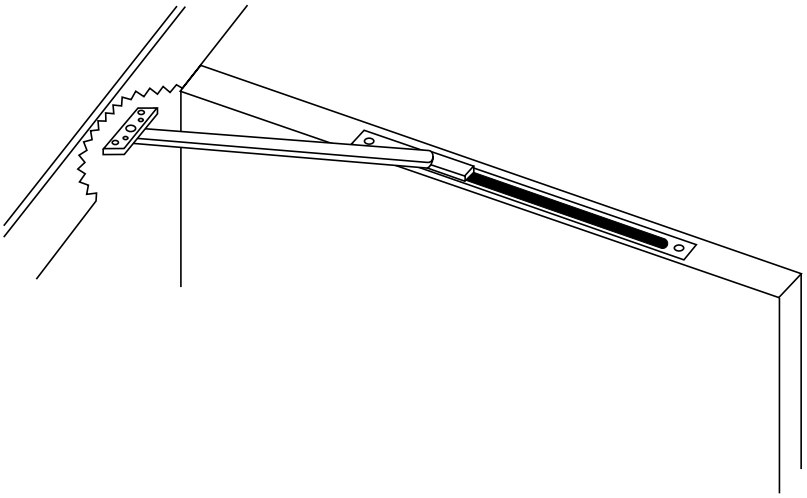

Door Opening Chart (*in inches*)

OH-1

Butts Offset Pivots	Center Hung Pivots	Model Number		
		Friction	H.O.	Stop
*24 - 28	—	1-116	1-126	1-136
28-1/16 - 33	30 - 36	1-216	1-226	1-236
33-1/16 - 38	36-1/16 - 41	1-316	1-326	1-336
38-1/16 - 43	41-1/16 - 46	1-416	1-426	1-436
43-1/16 - 48	46-1/16 - 50	1-516	1-526	1-536

**Butt hung only on this size door. No swing clear hinges.*

	ANSI No.		
Shipping Weight 4.5 lbs.	Friction	H.O.	Stop
	CO1531	C01511	C01541

Checkmate® Stops and Holders Options, Certifications, Limited Warranty, Specifications

Options

Less Spring – Suffix LS

Heavy duty slide track type stops have a spring in the end of the channel that keeps the slider from deadstopping. If these units are being used with electromechanical closer, where the door must deadstop, the LS option is needed. For non-adjustable models 1 and 9 only.

Angle Jamb Bracket Adapter –
Standard-duty models suffix 5258 (non-handed)
Heavy-duty models suffix 5458 (LH) or 5459 (RH)

When surface mounted units are mounted on a rabbeted door on the push side, flush door and transom on the push side, or in a reverse installation on the pull side of the door a special bracket is needed. Note that not all models can be mounted on the pull side of the door (*See specific model numbers in catalog.*)

5258

5458

Security Screws – Suffix Torx

Security screws can be supplied for exposed fasteners.

Certifications

All Rixson Checkmate® overhead stops and holders are in compliance with ANSI/BHMA 156.8, Grade 1 and 2 Standards. See individual products for sub sections. See individual models for UL Listing.

Limited Warranty

Rixson Checkmate® stops and holders are warranted for 2 years for defect. See *Rixson* price book for specific details of the limited warranty

Specifications

All overhead stops and holders shall be from a single manufacturer.

Standard-duty models used for interior or low to medium traffic doors.

Heavy-duty models used for exterior or high traffic doors or doors subject to abuse.

For extremely abusive areas or high winds use double lever arm type.

Coordinate deadstop and/or hold open location with concealed floor closers.

Checkmate products provide hold open and/or deadstop.

Solid Cast Wall Stops No. 400, 401, 402

Material: Cast brass with DuraFlex bumper

Finishes: Available in standard architectural finishes (see page 9)

Features: Concealed mounting, convex bumper. Back plate prevents damage to wall

No.	Bumper	Fastener	Size	Projection	Weight	ANSI A156.16
400	Convex	#6 x 1 1/2" FH SMS, plastic toggle	2 7/16" dia.	1"	3.3 lbs./10	L02101
401	Convex	#8 x 1" RH WS, plastic anchor	2 7/16" dia.	1"	3.3 lbs./10	L02101
402	Convex	#8 - 32 x 1" TH MS, lead anchor	2 7/16" dia.	1"	3.3 lbs./10	L02101

Solid Cast Wall Stops No. 403, 404, 405

Material: Cast brass with DuraFlex bumper

Finishes: Available in standard architectural finishes (see page 9)

Features: Concealed mounting, concave bumper. Back plate prevents damage to wall

No.	Bumper	Fastener	Size	Projection	Weight	ANSI A156.16
403	Concave	#6 - 1 1/2" FH SMS, plastic toggle	2 7/16" dia.	1"	3.3 lbs./10	L02251
404	Concave	#8 x 1" RH WS, plastic anchor	2 7/16" dia.	1"	3.3 lbs./10	L02251
405	Concave	#8 - 32 x 1" TH MS, lead anchor	2 7/16" dia.	1"	3.3 lbs./10	L02251

Wrought Wall Stops No. 406

ST-1

Material: Wrought brass, bronze, and stainless steel with DuraFlex bumper

Finishes: Available in standard architectural finishes (see page 9)

Features:
- Concealed mounting, convex bumper. Back plate prevents damage to wall
- Accepted by the New York State Office of Mental Health (OMH) for use in high risk areas

No.	Bumper	Fastener	Size	Projection	Weight	ANSI A156.16
406	Convex	#8 x 1 1/4" TH SMS, plastic toggle	2 1/2" dia.	3/4"	1.8 lbs./10	L02101

Wrought Wall Stops No. 409

Material: Wrought brass, bronze, and stainless steel with DuraFlex bumper

Finishes: Available in standard architectural finishes (see page 9)

Features:
- Concealed mounting, concave bumper. Back plate prevents damage to wall
- Accepted by the New York State Office of Mental Health (OMH) for use in high risk area

Options: DuraFlex bumper available in standard gray or optional black

No.	Bumper	Fastener	Size	Projection	Weight	ANSI A156.16
409	Concave	#8 x 1 1/4" TH SMS, plastic toggle	2 1/2" dia.	3/4"	1.8 lbs./10	L02251

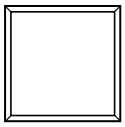

Wall Guard No. 606

Material: Clear rubber

Other: Sold in sheets of 55

Features: Self-adhesive mounting

No.	Fastener	Size	Weight
606	Self-adhesive back	1"x1"	0.4 lbs./55

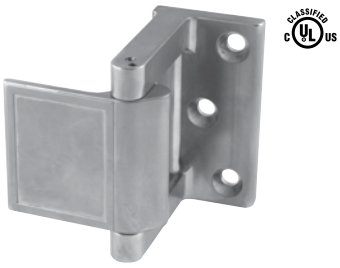

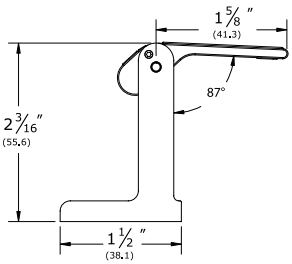

Privacy Door Latch No. PDL (formerly 607)

Material: Zinc die cast

Finishes: BRS, DBRS, STNN, CRM, DCRM, ORB

Features:
- ADA compliant
- Enhanced in room privacy
- Easy to install
- For use with UL Classified fire doors for use with hollow metal steel composite type fire doors rated up to and including 3 hrs Wood composite type fire doors rated up to and including 1 1/2 hrs and 20 minutes without hose stream

No.	Fastener	Size	Weight
PDL	#12 x 1 1/4" FH SMS	1 1/2 " x 2 13/16"	0.75 lbs.

Door Silencer No. 608CA

Material: Clear rubber

Other: Sold in packages of 300

Features: Self-adhesive mounting

No.	Fastener	Size	Weight
608CA	3/8" dia. x 1/8"	Metal or wood	0.2 lbs./300

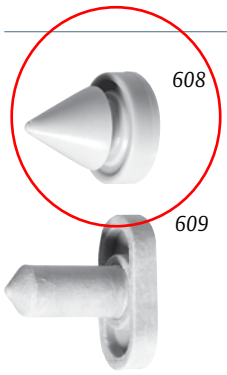

Door Silencers No. 608, 609

SI-1

Material: DuraFlex gray rubber

Other: Sold in packages of 100

No.	Size	Frame Type	Weight	ANSI A156.16
608	1/2" dia. x 5/8"	Metal	1.3 lbs./500	L03011
609	3/8" x 3/4"	Wood	1.3 lbs./500	L03021

ASSA ABLOY

The global leader in door opening solutions

ompany is prohibited.

TABLE OF CONTENTS

	Page		Page
1E Series features	2	Eurocylinders	7
1E Series specs/how to order	2	Cylinders and cams	8
1E Series rings/spindles/mortise/service equipment	3	1E Cylinder special rings	9
1E Series special cylinders	4, 5	5E Series specs/accessories	10
1EJ7J4/1EK7K4 high security cylinders	6	5E Series how to order	11
Patented keying system	6	1E Series how to order (continued)	12

1E SERIES – FEATURES

CY-1

1E Mortise Cylinder

Standard mortise applications require use of BEST's 1E series cylinders with standard 1E-C4 cam. BEST cylinders may be altered to function with other manufacturers' locks by use of different cams (see page 8) and different cylinder rings (see page 9). Special cylinder variations are available for most applications (see pages 4 & 5). BEST cylinders are machined from brass or bronze bar stock and are available in a variety of finishes. Additional security is provided by a set screw that mounts diagonally in the cylinder wall and when tightened, holds the cylinder securely in the housing. BEST mortise cylinders feature the BEST interchangeable core and may be master-keyed into any existing BEST system. Contact your local Stanley Security Solutions sales office for information on special cylinder applications not listed in this catalog.

1E

Specifications

Cylinder Nomenclature	Dimension "A"	Door Thickness
1E-64	1 ⅛"	1 ⅝" to 2 ¼"
1E-74	1 ¼"	1 ⅞" to 2 ½"

Cylinder diameter– 1 5/32"
To order: example: **1E74-C4-RP3-626**
Products covered by on or more of the following patents:
5,590,555 5,794,472

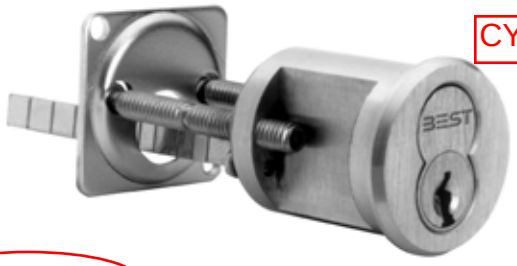

12E Rim Cylinder

Standard rim cylinder applications require the use of BEST's 1E rim cylinder series. BEST rim cylinders are interchangeable with other manufacturers' rim cylinders. BEST rim cylinders are machined from solid bar stock and are available in a variety of finishes. The standard package for the BEST rim cylinder includes cylinder, RP3 ring package, 1E-S2 spindle, clamp plate and clamp plate screws. BEST rim cylinders feature the BEST interchangeable core and may be masterkeyed into any existing Best system.

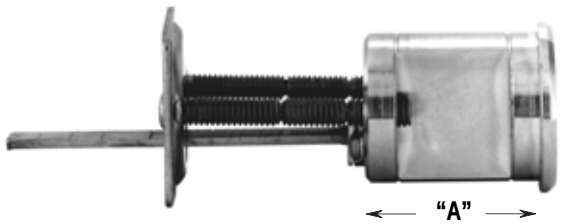

12E

Specifications

Cylinder Nomenclature	Dimension "A"	Door Thickness
12E62	1 3/16"	1" to 2 ¾"
12E72	1 11/32"	1 ¼" to 3"

Cylinder diameter– 1 5/32"
To order: example: **12E72-S2-RP3-626**

1E SERIES HOW TO ORDER

1E	7	4		C4	RP3	626	**
Series	**Core Housing**	**Function Code**	**Length Code**	**Cam or Spindle**	**Rings**	**Finish**	
See p. 12	**0**– dummy **6** – 6-pin **7**– 7 pin housing accepts all Best cores	**See p. 12**	**Blank**– Standard **22**– 1 ⅜" **24**– 1 ½" up to 6" (See page 4-5) (See code below)	**C4**– Standard cam **C181**– Adams Rite MS cam **S2**– Standard spindle (For special cams see page 8)	**RP**– Rim cylinder **RP1**– Tapered cylinder **RP2**– 6 pin mortise **RP3**– 7 pin mortise **RP4**– 3E mortise (For special rings see page 9)	626 690 **Satin*** 606 612 613 619 **Bright*** 605 611 625	

*Indicates extra cost
** Must specify keymark and number of keys or designate L/C for less core.

ALLEGION™

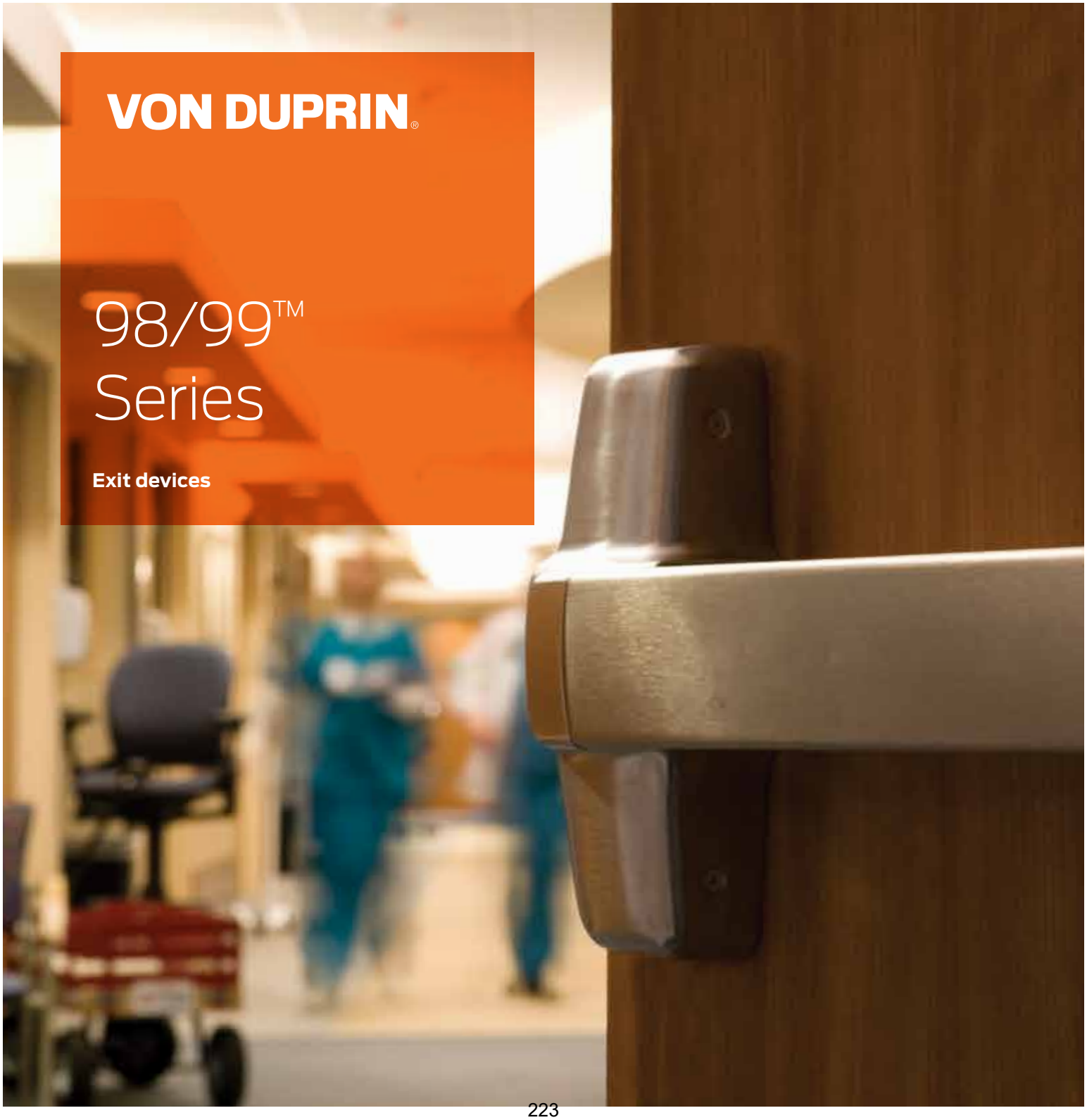

VON DUPRIN®

98/99™ Series

Exit devices

ED-1

98/99 Rim exit device

The 299 Strike ships standard, optional strikes available

98 and 99 Rim exit devices for all types of single and double doors with mullion, UL listed for panic exit hardware. Devices are ANSI A156.3 – 2008 Grade 1. The 98 device has a smooth mechanism case and the 99 device has a grooved case. The rim device is non-handed except when the following device options are used: SD (special dogging), -2 (double cylinder) or SS (signal switch). See Opposite page for available outside trim and device functions. Covers stock hollow metal doors with 86 or 161 cutouts on single doors (may cover cutouts on pairs – consult template).

Finishes – US3, US3A, US4, US4A, US10, US26, US26D, US26D-AM Antimicrobial, US28, 313, 315 & 643E. US15 and US32D available with 98 Series only.

Hex key dogging comes standard on 98/99 Rim exit devices

Specifications

Device functions	Device ships EO/DT/NL. Field selectable. For TP, K or L remove NL drive screw from device.
Device lengths	3' 2'4" to 3' (711mm to 914 mm) Door size 4' 2'10" to 4' (864 mm to 1219 mm) Door size
Device centerline from finished floor	39 13/16" (1011 mm) 39 11/16" (1008 mm) with mullion
Center case dimensions	8" x 2 3/4" x2 3/8" (203mm x 70mm x 60mm)
Mechanism case dimensions	2 1/4" x 2 1/4" (57mm x 57mm)
Projection	Pushbar neutral – 3 13/16" (97 mm) Pushbar depressed – 3 1/16" (78 mm)
Latch bolt	Deadlocking, 3/4" (19mm) throw
Fasteners & sex bolts (SNB)	Includes screw pack for 1 3/4" (44mm) and 2 1/4" (57mm) thick metal or wood doors. Optional 425 SNB available, see page 9 for quantities.
Electric options	**LX** Latchbolt monitor switch **RX** Pushpad monitor switch **RX2** Double pushpad monitor switch **E** Electric locking & unlocking trim **EL** Electric latch retraction **QEL** Quiet electric latch retraction **SS** Signal switch **CX** Chexit delayed exit **ALK** Alarm exit kit **WP-RX** Waterproof request to exit **CON** Allegion Connect
Mechanical options	**-2** Double cylinder **AX** Accessible device **GBK** Glass bead kit **PN** Pneumatic latch retraction **XP** Extra protection **SNB** Sex bolts **SEC** Security screws
Dogging feature Dogging options	Hex key dogging standard **CD** Cylinder dogging **SD** Special center case dogging **LD** Less dogging **DI** Dogging indicator **CI** Cylinder dogging indicator
Strikes	**299** – Dull black

XP
Extra protection
- 90° latch-to-strike contact
- Force resistance of 2,000+ lbs.

CD
Cylinder dogging
- Replaces hex key dogging
- Requires 1 1/4" mortise cylinder with inverted cam

QEL
Quiet electric latch retraction
- Bolt retraction via switch
- Converts exit door to push-pull operation

RX
Pushpad monitor switch
- Signals use of an opening
- SPDT switch to monitor pushpad

CX
Chexit delayed exit
- Meets NFPA 101 requirements
- Self-contained controls, locking, alarm

AX
Accessible device
- UL certified to meet new 5 lb. maximum operating force requirement
- Exceeds ANSI/BHMA requirements

EL
Electric latch retraction
- Enables remote unlatching
- Alternative to manual dogging

ALK
Alarm exit kit
- Unauthorized opening triggers 85-decibel horn
- Set in armed or disarmed mode by key

PN
Pneumatic latch retraction
- For areas where electrical devices banned
- Special linkage for mechanical or pneumatic dogging

CON
Allegion Connectors
- Common connectors to connect various door hardware all the way to the power supply

Standard trim

	EO	DT	NL	NL-OP
	No outside trim Exit only	 **Dummy trim** Pull when dogged	 **Night latch** Key retracts latchbolt	 **Night latch** Key retracts latchbolt optional pull required
Product description	98EO 99EO	98DT 99DT	98NL 99NL	98NL-OP 99NL-OP
Trim description	—	990DT	990NL-R/V	110NL-MD 110NL-WD
Escutcheon plate size	—	3" x 14 13/16" x 3/32" (76x360x2mm)	3" x 14 13/16" x 3/32" (76x360x2mm)	—
Pull center to center	—	5 1/2" (140mm)	5 1/2" (140mm)	—
Projection	—	2" (51mm)	2" (51mm)	—
ANSI function	01	02	03	03
Cylinder type	—	—	Rim	Rim
Handing	—	—	—	—
Optional trim	x990EO x996EO	x996K-DT x996L-DT x696DT x697DT	x996K-NL x996L-NL x696NL x697NL	
Optional #425 SNB quantity for device	6	2	2	6

	L	L-NL	L-BE	L-DT
	 Lever Key locks & unlocks	 **Lever – night latch** Key retracts latchbolt	 **Lever – blank escutcheon** Always operable (no cylinder)	 **Lever dummy trim** pull when dogged
Product description	98L 99L	98L-NL 99L-NL	98L-BE 99L-BE	98L-DT 99L-DT
Trim description	~~996L-R/V*~~	996L-NL-R/V	996L-BE-R/V*	996L-DT
Escutcheon plate size	2 3/4" x 10 3/4" x 27/32" (70x273x21mm)	2 3/4" x 10 3/4" x 27/32" (70x273x21mm)	2 3/4" x 10 3/4" x 27/32" (70x273x21mm)	2 3/4" x 10 3/4" x 27/32" (70x273x21mm)
Pull center to center	—	—	—	—
Projection	2 7/8" (73mm)	2 7/8" (73mm)	2 7/8" (73mm)	2 7/8" (73mm)
ANSI function	08	03	14	02
Cylinder type	Rim	Rim	—	—
Handing	Handed/Reversible	Handed/Reversible	Handed/Reversible	Handed/Reversible
Optional #425 SNB quantity for device	2	2	2	2

* Electrified lever operation available

Notes

Lever styles

M51
Knurling available

M52
Knurling available

M53

M54

M55

M56

M57 ••

M61
(Handed)

M62 ••
(Handed)

M63
(Handed)

M81
Knurling available

M82

M83

M84

M85
(Handed)

•• Available in Stainless Steel substrate ONLY.

Standard Levers

01

02
Knurling available

03*
Knurling available

05

06*
Default lever
Knurling available

07

12
(Handed)

16
(Omega)

17*
Knurling available

18

ACC
(Accent)
(Handed)

AST
(Asti)
(Handed)

MER
(Merano)
(Handed)

STA
(St. Annes)
(Handed)

LAT*
Latitude

LON*
Longitude

*Available in Stainless Steel - specify SS when ordering

Sex bolts

Sex Bolts when ordered with devices may be furnished with screw lengths different than shown in Column B. On page 7, Column B indicates popular sizes. Sex Bolts ordered separately are not furnished with screws. If screws are required refer to chart on page 7 and order screws by description as a separate item. Other screw lengths may be used based on minimum and maximum allowable thread engagement, shown in column "C." Quantity required — refer to device section, quantities differ depending on outside trim.

425 sex bolts are required for 22/88/98/99 series fire rated devices when used on wood door applications. When wood doors are specified for these devices, sex bolts will be added to the device application unless SLM blocking package is specified.

825 sex bolts are required with 98-F/99-F rim devices on wood door applications using EO, NL, TP, K and L outside trims. Two 825 sex bolts will be added to the device application unless SLM blocking package is specified.

To order, specify

1. Model number
2. Quantity (2 per package)
3. Finish
4. Door thickness other than 1¾" (44mm).

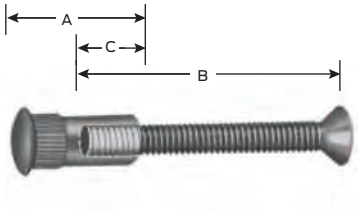

325,425,625A & 625B

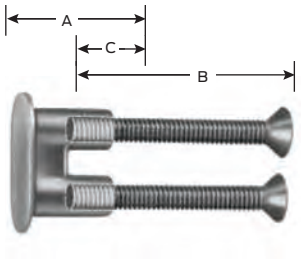

525

325

425

625A

625B

825

Refer to page 7 for A, B and C lengths

BlazeFrame® (DSL 2)

“DSL 2” (Slotted Both Sides) Profile with two slotted leg

09.22.16 (Non-Structural Metal Framing)

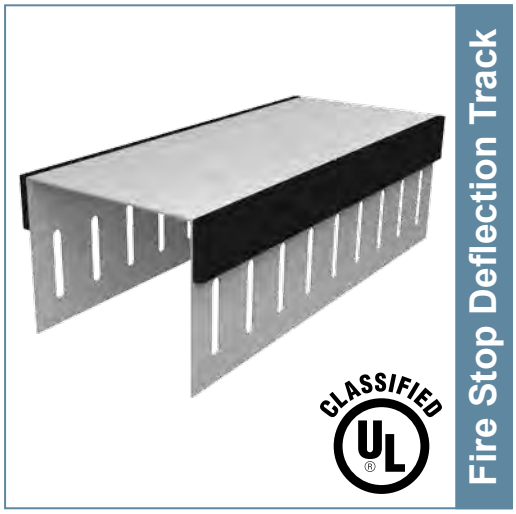

Composite Fire Stop/Framing for use in fire rated wall assemblies. Provide 100% unencumbered joint protection. Accommodates up to 1 1/2” overall movement with UL 2079 Level III Certification. Legs with slots spaced 1”o.c for positive attachment of studs per listed assemblies in UL Fire Resistance Directory. A 2mm thickness of cured intumescent material adhered to metal profiles provides ai , smoke and sound seals. When exposed to heat above 375 degrees Fahrenheit, the intumescent material expands up to 35 times its size. This provides protection from heat and flame passage during a fir event.

- **UL Classified and Listed Joint Systems**
- **Intumescent strip provides air, smoke and sound seals**
- **Patents: www.cd-patents.com**

Product Data & Ordering Information:

Material:

Yield Strength:	Grade 33ksi for 30mils, 33mils & 43mils Grade 50ksi for 54mils
Coating:	G40 EQ for 30mils, All others = CP60 (G90 available)

30mils: 20 Ga DW, 0.0312” Design Thickness, 0.0296“ Min. Thickness
(30 mils is only avaiable with DSL-E 2 and DSL 2 Profiles
33mils: 20 Gauge, 0.0346” Design Thickness, 0.0329“ Min. Thickness
43mils: 18 Gauge, 0.0451” Design Thickness, 0.0428“ Min. Thickness
54mils: 16 Gauge, 0.0566” Design Thickness, 0.0538“ Min. Thickness

Dimensions:

Profil	Leg Length (L)	Tape Width (I)	Slot Height (S)	Joint Protection
DSL-E 2 (30mil only)	2.50”	0.75”	1.50”	0.50”
DSL 2	3.00”	1.00”	1.50”	0.75”
DSLW 2	3.00”	1.25”	1.50”	1.00”
DSLX 2	4.00” *	1.75”	2.00”	1.50”

* 4” leg length is not available for 2-1/2” wide system

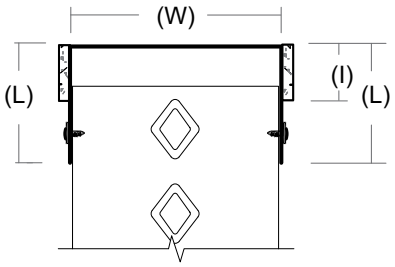

Inside width:	Equal to the outside width of the stud
Widths (W):	2-1/2”, 3-5/8”, 4”, 6” and 8”
Vertical slots:	0.22” wide & spaced every 1”o.c.
Track length:	10’-0”

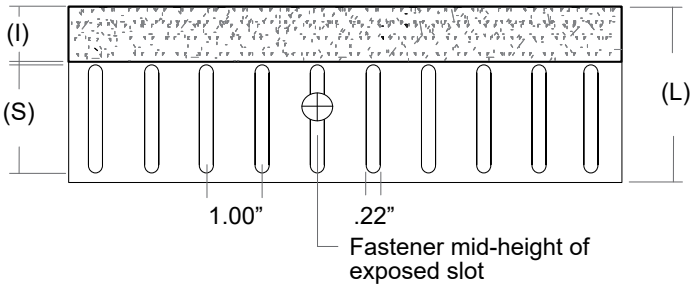

ASTM & Code Standards:

- ASTM A1003, C645 & C955
- UL2079, ASTM E814, E1966, E119
- MSDS & Product Certification Informatio is available @ www.clarkdietrich.com

Sustainability Credits:

For more details and LEED letters contact Technical Services at 888-437-3244 or visit www.clarkdietrich.com/LEED

LEED v4 MR Credit -- Building Product Disclosure and Optimization: EPD (up to 2 points) - Sourcing of Raw Materials (1 point) - Material Ingredients (1 point) - Construction and Demolition Waste Management (up to 2 points) - Innovation Credit (up to 2 points).

LEED 2009 Credit MR 2 & MR 4 -- ClarkDietrich's steel products are 100% recyclable and have a minimum recycled content of 34.2% (19.8% post-consumer and 14.4% pre-consumer). If seeking a higher number to meet Credit MR 5, please contact us at (info@clarkdietrich.com / 888-437-3244)

CD-BlazeFrame-DSL2 © 2/17/15 ClarkDietrich Building Systems

Project Information	Contractor Information	Architect Information
Name:	Name:	Name:
Address:	Contact:	Contact:
	Phone:	Phone:
	Fax:	Fax:

ClarkDietrich™ PRODUCT INFORMATION
Example: 362S162-43 (33ksi, CP60) punched

S = Structural stud or joist
PDS = ProSTUD® drywall stud

T = Structural track
PDT = ProTRAK® drywall track

U = CRC or U-channel

F = Furring channel

Punching
Punched studs or joists will be supplied unless the customer indicates unpunched material is required at time of order. All track and channels are unpunched.

362 S 162 – 43 (33ksi, CP60) Punched

Protective Coating
Structural framing CP60 (G90 available)
Drywall framing G40EQ (G40 or G60 available)

KSI -Yield Strength (Fy)
Structural: 33ksi or 50ksi steel
Drywall: See ProSTUD below.

ClarkDietrich structural member depths, flanges & available thickness

Member depths	Flange widths range	Mils range	Gauge range
(250) 2-1/2"	1-3/8," 1-5/8," 2" & 2-1/2"	33–68	20–14 ga
(350) 3-1/2"	1-3/8," 1-5/8," 2" & 2-1/2"	33–68	20–14 ga
(362) 3-5/8"	1-3/8," 1-5/8," 2" & 2-1/2"	33–97	20–12 ga
(400) 4"	1-3/8," 1-5/8," 2" & 2-1/2"	33–97	20–12 ga
(550) 5-1/2"	1-5/8," 2" & 2-1/2"	33–97	20–12 ga
(600) 6"	1-3/8," 1-5/8," 2," 2-1/2" & 3"	33–97	20–12 ga
(800) 8"	1-3/8," 1-5/8," 2," 2-1/2" & 3"	33–97	20–12 ga
(925) 9-1/4"	1-5/8," 2" & 2-1/2"	43–97	18–12 ga
(1000) 10"	1-5/8," 2," 2-1/2" & 3"	43–97	18–12 ga
(1200) 12"	1-5/8," 2," 2-1/2" & 3"	54–97	16–12 ga
(1400) 14"	1-5/8," 2," 2-1/2" & 3"	54–97	16–12 ga

ClarkDietrich return lip dimensions

Flange width	Return lip	Member depths
137 (1-3/8")	3/8"	3-5/8"–8"
162 (1-5/8")	1/2"	2-1/2"–14"
200 (2")	5/8"	3-5/8"–14"
250 (2-1/2")	5/8"	3-5/8"–14"
300 (3")	5/8"	6"–14"

Old stud/track designations

Designation	Type	Flange/leg
CWN	Stud	1-3/8"
CSJ	Stud	1-5/8"
CSW	Stud	2"
CSE	Stud	2-1/2"
CSS	Stud	3"
TSB	Track	1-1/4"
TSC	Track	2"
TSE	Track	3"

ClarkDietrich thickness identification and color coding

Member mils	Thickness gauge	Design thickness	Min. thickness	Color code
33	20	0.0346"	0.0329"	White
43	18	0.0451"	0.0428"	Yellow
54	16	0.0566"	0.0538"	Green
68	14	0.0713"	0.0677"	Orange
97	12	0.1017"	0.0966"	Red

ClarkDietrich ProSTUD® Drywall framing system thickness

Member gauge	Mils	KSI	Design thickness	Min. thickness	Color code
ProSTUD 25	15	50	0.0158	0.0150	None
ProSTUD 20	19	65	0.0200	0.0190	Pink
ProSTUD 20XD	22	57	0.0232	0.0220	Pink
ProSTUD 30MIL	30	33	0.0312	0.0296	Pink
ProSTUD 33MIL	33	33	0.0346	0.0329	White

ProTRAK (25, 20 & 20XD) = 50ksi ProTRAK 30 & 33mil = 33ksi

HOW TO IDENTIFY OUR PRODUCTS

ClarkDietrich has adopted standard nomenclature established by the American Iron and Steel Institute (AISI) for identifying each of its products. Coding of each member consists of four parts, in this order:

- A number which identifies the web depth of the member to two decimal places. 600 = 6.00," 1000 = 10.00," 550 = 5.50," 362 = 3.625," etc.
- A letter that tells you the type of member, such as S = Stud/joist, T = Track, U = U-channel, and F = Furring channel.
- A number that defines the flange dimension in inches to two decimal places. 162 = 1.625," 200 = 2.00," 125 = 1.25," etc.
- A number following a hyphen that denotes the minimum delivered thickness in mils (33mils = 33/1000 inches which is approximately 0.0329"). Minimum delivered thickness is 95% of design thickness.

Product availability.

Most products manufactured by ClarkDietrich are readily available in all markets, but there can be exceptions. Please contact your ClarkDietrich Sales Representative to make sure the product you need is available in your market area.

Protective coatings.

Non-structural products are coated to meet the requirements of AISI S220 and ASTM C645, with a G40 or a protective coating with an equivalent corrosion resistance. ProSTUD® Drywall Framing System meets the Code Compliance Research Report ATI CCRR-0207. Non-structural products may also be ordered with enhanced coatings for special applications.

Structural framing products are available with a variety of protective coatings that meet the CP60 coating protection level requirements of AISI S200 and ASTM C955. These coatings may include G60, A60, AZ50 or GF30, all of which satisfy the above referenced standards. G90 coatings are an enhanced option that can be requested for highly corrosive environments. ClarkDietrich can supply a specific or enhanced coating to meet specific project requirements when requested.

ClarkDietrich™ CODE APPROVALS AND PERFORMANCE STANDARDS

Material Certification - ClarkDietrich products meet or exceed these applicable performance standards.

Structural framing standards

AISI S100-07 "North American Specification for the Design of Cold-Formed Steel Structural Members, 2001 with 2010 supplement"

ASTM C955	Load-bearing steel framing
ASTM C1007	Installation
ASTM A1003	Material specification for steel sheet mechanical and chemical requirements

Protective coating standards

ASTM A653	Zinc-coated hot-dip process
ASTM A792	55% aluminum-zinc alloy-coated hot-dip process
ASTM A875	Zinc-5% aluminum alloy-coated hot-dip process
ASTM A924	Metallic-coated hot-dip process

Additional code approvals

SFIA (Steel Framing Industry Association)
ICC-ES ESR 1166P

ProSTUD® drywall framing standards

AISI S100-07	North American Specification for the Design of Cold-Formed Steel Structural Members
AISI S220-11	North American Standard for Cold-Formed Steel Framing – Nonstructural Members

ASTM American Society for Testing and Materials

A1003	Material specification for steel sheet mechanical and chemical requirements
C645	Standard specification for nonstructural steel framing
C754	Standard specification for installation of steel framing
C1002	Standard specification for steel self piercing tapping screw
E119	Standard test methods for fire tests
E72	Standard test methods of conducting strength tests
E90	Standard test method for sound transmission loss

UL® Underwriters Laboratories testing standard

UL 263 Fire Tests of Building Construction and Materials"

Multiple UL® design listings for ProSTUD

Over 50 UL Designs; UL file number R26512

Additional code approvals

SFIA (Steel Framing Industry Association)
ATI CCRR-0207

UL® and UL® Design are trademarks of Underwriters Laboratories, Inc.

Metal lath & accessories

ASTM C847	Metal lath products
ASTM C841	Installation of interior lathing & furring
ASTM C1063	Installation of lathing & furring
ASTM A653	Zinc-coated hot-dip process
ASTM C1047	Accessories standards—control joints
ASTM A924	Metallic-coated hot-dip process
UUB790A	APB type 1, grade D, style 2
CE 240.01	Furring (metal) lathing and plastering
EMLA 920	Guide specs for metal lathing & furring

Additional code approvals

ATI CCRR-0204

ClarkDietrich Building Systems has prepared this literature with the utmost diligence and care for accuracy and conformance to standards.

ClarkDietrich Building Systems reserves the right to modify or change any information contained in this literature without notification.

ClarkDietrich Building Systems intends this information to be accurate, informative, and helpful as a selection guide for choosing ClarkDietrich Building System products. However, this information is only to be used for guidance and is not intended to replace the design, drawings, specifications, and decisions of a professional architect or engineer.

ClarkDietrich Building Systems or its affiliates shall not be responsible for incidental or consequential damages, directly or indirectly sustained, nor for loss caused by application of our products for other than their intended uses. Our liability is limited to replacement of defective products. Claims shall be deemed waived unless they are made to us in writing within thirty (30) days of the date a problem was or reasonably should have been discovered.

ClarkDietrich structural and nonstructural framing comply with the SFIA Code Compliance Program. ClarkDietrich is a member of SFIA.

Check the updated list of Certified Production Facilities at Architectural Testing's website at www.archtest.com.

USGBC and related logo is a trademark owned by the U.S. Green Building Council and is used by permission.

LOCATIONS

ClarkDietrich Building Systems Manufacturing and Sales Locations:

CALIFORNIA Riverside P 951.360.3500	CALIFORNIA Sacramento P 951.360.3500	CONNECTICUT Bristol P 866.921.0023	FLORIDA Dade City P 352.518.4400
GEORGIA McDonough P 678.304.5500	HAWAII Kapolei P 951.360.3500	ILLINOIS Rochelle P 800.659.0745	MARYLAND Baltimore P 410.477.4000
OHIO Warren-East P 330.372.5564	OHIO Warren-West P 330.372.4014	TEXAS Baytown P 281.383.1617	TEXAS Dallas P 214.350.1716
CLIP EXPRESS℠-EAST P 866.638.1908	CLIP EXPRESS℠-WEST P 530.406.3462	VINYL CORP P 800.648.4695	

ClarkDietrich Engineering Services. A full spectrum of solutions.

Toll-Free Phone: 877.832.3206
Technical Services: 888.437.3244
Toll Free Fax: 877.832.3208
Email: engineering@clarkdietrich.com

CENTRAL Crown Point, IN
NORTHEAST Bristol, CT
SOUTHEAST Roswell, GA
SOUTHEAST McDonough, GA
WEST Carlsbad, CA

The technical content of this page is effective 08/18/14 and supersedes all previous information

Safety Data Sheet (SDS)

Section 1 – Identification

1(a) Product Identifier used on Label: Coated Steel Sheet.

1(b) Use/Description: Coated Steel Sheet for thin gauge framing products.

1(d) Products: Cold-Formed Steel Framing components and accessories for drywall, curtain wall and load bearing systems. Also includes metal lath and plaster accessories.

1(d) Synonyms: Hot Band, Cold Rolled, P&O, Galvanized.

1(e) Company Identification and Emergency Contact Information: ClarkDietrich Building Systems

Corporate Office:

9100 Centre Point Drive, Suite 210
West Chester, OH 45069

Phone: 513-870-1100

Fax: 513-870-1300

http://www.clarkdietrich.com/

Manufacturing Locations:

Baltimore, MD	Baytown, TX	Bristol, CT	Dade City, FL
Dallas, TX	Kapolei, HI	McDonough, GA	Riverside, CA
Rochelle, IL	Sacramento, CA	Warren East & West, OH	

Section 2 – Hazard(s) Identification

2(a) Classification of the chemical: Coated Steel Sheet is considered an article under Reach regulation (REACH REGULATION (EC) No 1907/2006) and is not subject to classification under CLP regulation (REGULATION (EC) No 1272/2008). However, Coated Steel Sheet is not exempt as an article under OSHA's Hazard Communication Standard (29 CFR 1910.1200) due to its downstream use, thus this product is considered a mixture and a hazardous material. Therefore, the categories of Health Hazards as defined in "GLOBALLY HARMONIZED SYSTEM OF CLASSIFICATION AND LABELLING OF CHEMICALS (GHS), Third revised edition ST/SG/AC.10/30/Rev.3" United Nations, New York and Geneva, 2009 have been evaluated. Refer to Section 3, 8 and 11 for additional information.

2(b) Signal word, hazard statement(s), symbols and precautionary statement(s):

Hazard Symbol	Hazard Classification	Signal Word	Hazard Statement(s)
	Carcinogenicity - 2 Reproductive Toxicity - 2 Single Target Organ Toxicity (STOT) Repeat Exposure -1	**Danger**	Suspected of causing cancer. Suspected of damaging fertility or the unborn child. Causes damage to lungs and central nervous system through prolonged or repeated inhalation exposure.
	Acute Toxicity-Oral - 4 Skin Sensitization - 1 STOT Single Exposure - 3		Harmful if swallowed. May cause an allergic skin reaction. Harmful in contact with skin. May cause respiratory irritation.
NA	Eye Irritation-2B		Causes eye irritation.

Precautionary Statement(s):

Prevention	Response	Storage/Disposal
Do not breathe dusts / fume / gas / mist / vapor / spray. Wear protective gloves / protective clothing / eye protection / face protection. Contaminated work clothing must not be allowed out of the workplace. Use only outdoors or in well ventilated areas. Wash thoroughly after handling. Obtain special instructions before use. Do not handle until all safety precautions have been read and understood. Do not eat, drink or smoke when using this product.	If inhaled: Remove person to fresh air and keep comfortable for breathing. If exposed, concerned or feel unwell: Get medical advice/attention. If in eyes: Rinse cautiously with water for several minutes. Remove contact lenses, if present and easy to do. Continue Rinsing. If on skin: Wash with plenty of water. If irritation or rash occurs: Get medical advice/attention. Take off and wash contaminated clothing before reuse. Call a poison center/doctor if you feel unwell.	Dispose of contents in accordance with federal, state and local regulations.

2(c) Hazards not otherwise classified: None Known

2(d) Unknown acute toxicity statement (mixture): None Known

ClarkDietrich
BUILDING SYSTEMS

Product Submittal Sheet

Tech Support: 888-437-3244
Engineering Services: 877-832-3206

Sales: 800-543-7140
clarkdietrich.com

Product category: ProSTUD® 20 Drywall Stud
Product name: **362PDS125-19 65ksi G40EQ - Punched**
3-5/8" ProSTUD 20 (19mil)
Coating: G40EQ
Color coding: Pink

09.22.16 (Non-Structural Metal Framing)

* Embossments in web are only placed on sections 2-1/2" and wider.

Geometric Properties

Web depth	3.625 in	Weight	0.448 lb/ft
Flange width	1.250 in	Punchout width	1.500 in
Stiffening lip	0.315 in	Punchout length	2.500 in
Design thickness	0.0200 in	Minimum thickness	0.0190 in
Yield stress, Fy	65 ksi		

Gross Section Properties of Full Section, Strong Axis

Cross sectional area (A)	0.132 in^2
Moment of inertia (Ix)	0.266 in^4
Radius of gyration (Rx)	1.420 in
Gross moment of inertia (Iy)	0.027 in^4
Gross radius of gyration (Ry)	0.454 in

Effective Section Properties, Strong Axis

Effective area (Ae)	0.048 in^2
Moment of inertia for deflection (Ixe)	0.254 in^4
Section modulus (Sxe)	0.080 in^3
Allowable bending moment (Ma)	3,103 in-lbs
Allowable shear force in web (Unpunched) (Vag)	203 lb
Allowable shear force in web (Punched) (Vanet)	189 lb

Torsional Properties

St. Venant torsion constant (J x 1000)	0.0176 in^4
Warping constant (Cw)	0.072 in^6
Distance from shear center to neutral axis (Xo)	-0.876 in
Radii of gyration (Ro)	1.729 in
Torsional flexural constant (Beta)	0.743
Unbraced Length (Lu)	22.1 in

ASTM & Code Standards:

- AISI S100-07 & S220-11
- Meets or exceeds ASTM C645 & C754
- ASTM E119, E72 & E90
- ATI CCRR-0207
- LA RR 26019
- Multiple UL® Design Listing including: V438, V450 & U419
- SDS & Product Certification Information available at www.clarkdietrich.com
- U.S. Patent No. 9,010,070

CLASSIFIED C UL US

Notes:

- Calculated properties are based on AISI S100-07, North American Specification for Design of Cold-Formed Steel Structural Members and AISI S220-11, North American Standard for Cold-Formed Steel Framing - Nonstructural Members.
- Effective properties incorporate the strength increase from the cold work of forming as applicable per AISI A7.2.
- Tabulated gross properties, including torsional properties, are based on full-unreduced cross section of the studs, away from punchouts.
- For deflection calculations, use the effective moment of inertia.
- Allowable moment includes cold work of forming.
- Allowable moment is taken as the lowest value based on local or distortional buckling. Distortional buckling strength is based on a k-phi = 0.

- East Coast Punch Pattern: Center of knockouts are 12" from the leading edge then 48" o.c.
- West Coast Punch Pattern: Center of knockouts are 24" from the leading edge then 24" o.c.

Sustainability Credits:
For more details and LEED letters contact Technical Services at 888-437-3244 or visit www.clarkdietrich.com/LEED
LEED v4 MR Credit -- Building Product Disclosure and Optimization: EPD (up to 2 points) - Sourcing of Raw Materials (1 point) - Material Ingredients (1 point) - Construction and Demolition Waste Management (up to 2 points) - Innovation Credit (up to 2 points).
LEED 2009 Credit MR 2 & MR 4 -- ClarkDietrich's steel products are 100% recyclable and have a minimum recycled content of 34.2% (19.8% post-consumer and 14.4% pre-consumer). If seeking a higher number to meet Credit MR 5, please contact us at (info@clarkdietrich.com / 888-437-3244)

CD-PDS © 02/16 ClarkDietrich Building Systems

Project Information	Contractor Information	Architect Information
Name:	Name:	Name:
Address:	Contact:	Contact:
	Phone:	Phone:
	Fax:	Fax:

ClarkDietrich BUILDING SYSTEMS

Product Submittal Sheet

Tech Support: 888-437-3244
Engineering Services: 877-832-3206

Sales: 800-543-7140
clarkdietrich.com

Product category: ProSTUD® 20 Drywall Stud
Product name: **362PDS125-19 65ksi G40EQ - Punched**
3-5/8" ProSTUD 20 (19mil)

3-5/8" ProSTUD 20 (19mil) Drywall Stud - COMPOSITE Limiting Heights (AC86-2010)

(1 layer) 5/8" Type X Gypsum Board

Spacing	5 psf			7.5 psf			10 psf		
(inches)	L/120	L/240	L/360	L/120	L/240	L/360	L/120	L/240	L/360
12	23'-3"	18'-5"	16'-1"	20'-4"	16'-1"	14'-1"	18'-5"	14'-8"	12'-10"
16	21'-1"	16'-9"	14'-8"	18'-5"	14'-8"	12'-10"	16'-7"f	13'-4"	11'-7"
24	18'-5"	14'-8"	12'-10"	15'-8"f	12'-10"	11'-1"	13'-7"f	11'-7"	9'-11"

Composite Table Notes:

- Allowable composite limiting heights were determined in accordance with ICC-ES AC86-2010.
- Additional composite wall testing and analysis requirements of the SFIA Code Compliance Certification Program were observed.
- In accordance with current building codes and AISI design standards, the 1/3 Stress Increase for strength was not used.
- The composite limiting heights provided in the tables are based on a single layer of type X gypsum board from the following manufacturers: American, CertainTeed, Georgia Pacific, Lafarge, National, Temple Inland, and USG.
- The gypsum board must be applied full height in the vertical orientation to each stud flange and installed in accordance with ASTM C754-2004 using minimum No. 6 Type S Drywall screws spaced as listed below:
- Screws spaced a minimum of 16 in on-center to framing members spaced at 16 in or 12 in on-center.
- Screws spaced a minimum of 12 in on-center to framing members spaced at 24 in on-center.
- No fasteners are required for attaching the stud to the track except as detailed in ASTM C754-2008.
- Stud end bearing must be a minimum of 1 inch.
- f: Adjacent to the height value indicates that flexural stress controls the allowable wall height.
- s: Adjacent to the height value indicates that shear/end reaction controls the allowable wall height.

3-5/8" ProSTUD 20 (19mil) Drywall Stud - NON-COMPOSITE Limiting Heights (FULLY BRACED)

Spacing	5 psf			7.5 psf			10 psf		
(inches)	L/120	L/240	L/360	L/120	L/240	L/360	L/120	L/240	L/360
12	18'-10"	14'-11"	13'-0"	16'-5"	13'-0"	11'-5"	14'-5"	11'-10"	10'-4"
16	17'-1"	13'-7"	11'-10"	14'-5"	11'-10"	10'-4"	12'-5"	10'-9"	9'-5"
24	14'-5"	11'-10"	10'-4"	11'-9"	10'-4"	9'-0"	10'-2"	9'-5"	8'-3"

Non-Composite Table Notes:

- Heights are based on AISI S100-07, North American Specification, and AISI S220-11, North American Standard for Cold-Formed Steel Framing - Nonstructural Members, using steel properties alone.
- Above listed Non-Composite Limiting Heights are applicable when the unbraced length is less than or equal to Lu.
- Heights are limited by moment, deflection, shear, and web crippling (assuming 1" end reaction bearing).
- Heights labeled with a "*" can achieve higher heights by using end-bearing stiffeners. See full ProSTUD non-composite charts at clarkdietrich.com.

CD-PDS-LH © 02/16 ClarkDietrich Building Systems

Project Information	Contractor Information	Architect Information
Name:	Name:	Name:
Address:	Contact:	Contact:
	Phone:	Phone:
	Fax:	Fax:

ClarkDietrich BUILDING SYSTEMS

Product Submittal Sheet

Tech Support: 888-437-3244
Engineering Services: 877-832-3206
Sales: 800-543-7140
clarkdietrich.com

Product category: ProTRAK® 20 Drywall Track 1-1/4" leg
Product name: **362PDT125-19 50ksi G40EQ - Unpunched**
3-5/8" ProTRAK 20 (19mil)
Coating: G40EQ
Color coding: Pink

09.22.16 (Non-Structural Metal Framing)

* Embossments in web are only placed on sections 2-1/2" and wider.

Geometric Properties

Inside web depth	3.625 in	Weight	0.417 lb/ft
Leg width	1.250 in	Minimum thickness	0.0190 in
Design thickness	0.0200 in		
Yield stress, Fy	50 ksi		

Gross Section Properties of Full Section, Strong Axis

Cross sectional area (A)	0.122 in^2
Moment of inertia (Ix)	0.249 in^4
Radius of gyration (Rx)	1.125 in
Gross moment of inertia (Iy)	0.103 in^4
Gross radius of gyration (Ry)	0.830 in

Effective Section Properties, Strong Axis

Effective area (Ae)	0.032 in^4
Moment of inertia for deflection (Ixe)	0.099 in^4
Section modulus (Sxe)	0.037 in^3
Allowable bending moment (Ma)	1,113 in-lbs
Allowable shear force in web (Vag)	289 lb

Torsional Properties

St. Venant torsion constant (J x 1000)	0.0200 in^4
Warping constant (Cw)	0.121 in^6
Distance from shear center to neutral axis (Xo)	-1.890 in
Radii of gyration (Ro)	2.351 in
Torsional flexural constant (Beta)	0.354

ASTM & Code Standards:

- AISI S100-07 & S220-11
- Meets or exceeds ASTM C645 & C754
- ASTM E119, E72 & E90
- ATI CCRR-0207
- LA RR 26019
- Multiple UL® Design Listing including: V438, V450 & U419
- SDS & Product Certification Information available at www.clarkdietrich.com.
- U.S. Patent No. 9,010,070

CLASSIFIED C UL US

Notes:

- Calculated properties are based on AISI S100-07, North American Specification for Design of Cold-Formed Steel Structural Members and AISI S220-11, North American Standard for Cold-Formed Steel Framing - Nonstructural Members.
- Effective properties incorporate the strength increase from the cold work of forming as applicable per AISI A7.2.
- Tabulated gross properties, including torsional properties, are based on full-unreduced cross section of the tracks.
- For deflection calculations, use the effective moment of inertia.
- Allowable moment includes cold work of forming.
- Allowable moment is taken as the lowest value based on local or distortional buckling. Distortional buckling strength is based on a k-phi = 0.
- Web depth for track sections is equal to the nominal height plus two times the design thickness plus the bend radius. Hems on nonstructural track sections are ignored.

Sustainability Credits:
For more details and LEED letters contact Technical Services at 888-437-3244 or visit www.clarkdietrich.com/LEED
LEED v4 MR Credit -- Building Product Disclosure and Optimization: EPD (up to 2 points) - Sourcing of Raw Materials (1 point) - Material Ingredients (1 point) - Construction and Demolition Waste Management (up to 2 points) - Innovation Credit (up to 2 points).
LEED 2009 Credit MR 2 & MR 4 -- ClarkDietrich's steel products are 100% recyclable and have a minimum recycled content of 34.2% (19.8% post-consumer and 14.4% pre-consumer). If seeking a higher number to meet Credit MR 5, please contact us at (info@clarkdietrich.com / 888-437-3244)

CD-PDT © 02/16 ClarkDietrich Building Systems

Project Information	Contractor Information	Architect Information
Name:	Name:	Name:
Address:	Contact:	Contact:
	Phone:	Phone:
	Fax:	Fax: