RENOVATION OF UNIVERSITY OF MARYLAND MEDICAL CENTER OFFICE BUILDING

616 CHARLES STREET, LA PLATA, MARYLAND 20646

GENERAL NOTES

1. PATCH AND PAINT ALL EXISTING PAINTED SURFACES TO REMAIN.
2. INSTALL ALL PRODUCTS IN STRICT ACCORDANCE WITH MANUFACTURER'S RECOMMENDATIONS. ALL WORK SHALL CONFORM TO APPLICABLE CODES AND STANDARDS.
3. GENERAL CONTRACTOR TO REMOVE AND DISPOSE OF ALL DEMOLISHED ITEMS

PRODUCTS (OR EQUAL)

CERAMIC FLOOR TILE	AMERICAN OLEAN: SATIN GLO, UNGLAZED CERAMIC TILE, 2x2
CERAMIC WALL TILE	AMERICAN OLEAN: MATTE, 4 1/4x4 1/4
EPOXY COATING	EVERLAST INDUSTRIAL FLOOR w/SLIP RESISTANT ADDITIVE
ACT	ARMSTRONG 1766 OR 1761 (TYP.); WHITE FINE FISSURED SECOND LOOK II ARMSTRONG 672 IN KITCHEN
DOOR LOCK AND LATCHSETS	SCHLAGE SATIN CHROME
LVT	ASCENSION OUTLAND COLLECTION, CHESAPEAKE OR GLACIER BAY (tbd)
EXTERIOR DOORS	KAWNEER 190 ENTRANCES
INTERIOR PAINT	MCCORMICK; EGGSHELL FINISH ON WALLS (EXCEPT SEMI-GLOSS ON MR GYP BD); SEMI-GLOSS ON DOORS, FRAMES, AND TRIM
EXTERIOR PAINT	MCCORMICK; SATIN FINISH
EIFS	DRYVIT OUTSULATION PLUS MD
VINYL WALL BASE	JOHNSONITE TRADITIONAL, 4"
ELEVATOR	SAVARIA ORION

DRAWING INDEX

ARCHITECTURAL & STRUCTURAL

101 COVER SHEET
102 FIRST FLOOR CODE PLAN
103 SECOND FLOOR CODE PLAN
111 DEMOLITION PLANS
112 DEMOLITION ELEVATIONS
201 COMPOSITE PLANS
202 ROOF PLAN
211 STAIR PLANS
212 LOBBY PLANS
213 STAIR PLANS
301 COMPOSITE ELEVATIONS
302 COMPOSITE ELEVATIONS
401 COMPOSITE PLAN– FIRST FLOOR
402 COMPOSITE PLAN– SECOND FLOOR
411 PARTIAL FLOOR PLAN– FIRST FLOOR
412 PARTIAL FLOOR PLAN– FIRST FLOOR
413 PARTIAL FLOOR PLAN– FIRST FLOOR
421 PARTIAL FLOOR PLAN– SECOND FLOOR
422 PARTIAL FLOOR PLAN– SECOND FLOOR
423 PARTIAL FLOOR PLAN– SECOND FLOOR
431 TOILET PLAN– LOBBY
441 REFLECTED CEILING PLAN– FIRST FLR.
442 REFLECTED CEILING PLAN– SECOND FLR.
451 SCHEDULES
501 PARTIAL ELEVATION DETAILS
502 PARTIAL ELEVATION DETAILS
503 PARTIAL ELEVATION DETAILS
511 STOREFRONT DETAILS
512 CURTAIN WALL DETAILS
513 EIFS DETAILS
601 FOUNDATION PLAN
602 FLOOR FRAMING PLAN
603 ROOF FRAMING PLAN
611 STRUCTURAL DETAILS
612 ELEVATOR DETAILS

MECHANICAL/ELECTRICAL/PLUMBING

M001 MECHANICAL NOTES
M002 MECHANICAL SPECIFICATIONS
M100 MECHANICAL PLAN
M200 MECHANICAL PIPING PLAN
M300 MECHANICAL DETAILS
M400 MECHANICAL SCHEDULES
M401 MECHANICAL SCHEDULES

E001 ELECTRICAL NOTERS
E002 ELECTRICAL SPECIFICATIONS
E100 ELECTRICAL POWER FIRST & SECOND FLR. PLAN
E200 ELECTRICAL LIGHTING FIRST & SECOND FLR. PLAN
E300 ELECTRICAL RISER DIAGRAMS
E301 ELECTRICAL DETAILS
E400 ELECTRICAL SCHEDULES
E401 ELECTRICAL SCHEDULES
E402 ELECTRICAL SCHEDULES
E403 ELECTRICAL SCHEDULES

P001 PLUMBING NOTES
P002 PLUMBING SPECIFATIONS
P100 DOMESTIC WATER PIPING FIRST & SECOND FLR. PLAN
P200 SANITARY AND VENT PIPING FIRST & SECOND FLR. PLAN
P300 PLUMBING RISER
P400 PLUMBING SCHEDULE

F001 FIRE ALARM NOTES
F100 FIRE ALARM PLAN– FIRST FLR.

Architect:
R.L. Litten & Associates, Architects, LLC
300 Charles St., Ste.4 P.O. Box 1920, La Plata, MD 20646
(301) 934-1471 E-mail: rllitten.architect@verizon.net

Structural Engineer:
Edward J. Reed PE SECB
233 Bake House Landing, Tappahannock, VA 22560
(410) 610-4783 E-mail: reedej@msn.com

MEP Engineer:
Abramson Engineering, LLC
3655B Old Court Rd., Ste.24, Baltimore, MD 21208
(410) 259-9461 E-mail:

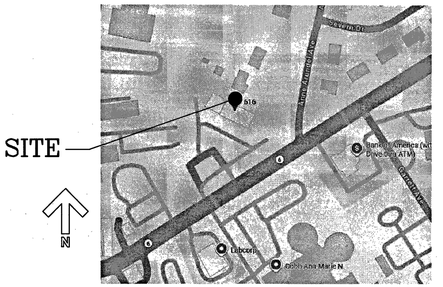

VICINITY MAP
1"=100'

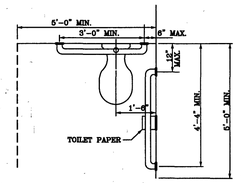

STANDARD TOILET STALL
SCALE: NTS

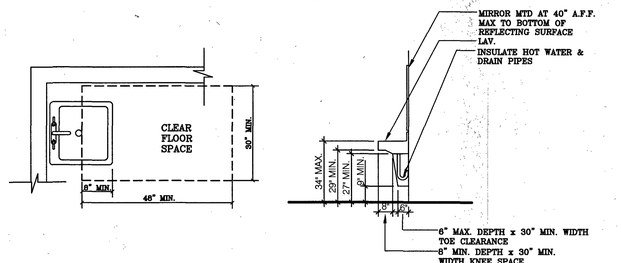

ACCESSIBLE LAVATORY DETAILS
SCALE: NTS

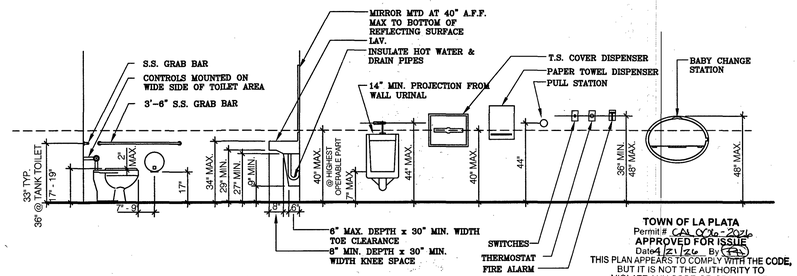

MOUNTING HTS. & CLEARANCE
SCALE: NTS

TOWN OF LA PLATA
Permit # CAL 026-2026
APPROVED FOR ISSUE
Date 4/21/26 By
THIS PLAN APPEARS TO COMPLY WITH THE CODE, BUT IT IS NOT THE AUTHORITY TO VIOLATE ANY CODE OR ORDINANCE.
ALL WORK IS SUBJECT TO INSPECTION APPROVAL
*** KEEP THESE PLANS AT THE JOBSITE ***
OWNER COPY ✓ FILE COPY

STATE OF MARYLAND · RONALD L. LITTEN · 9561 · ARCHITECT

I CERTIFY THAT THESE DOCUMENTS WERE PREPARED OR APPROVED BY ME, AND THAT I AM A DULY LICENSED ARCHITECT UNDER THE LAWS OF THE STATE OF MARYLAND. LICENSE NUMBER 7959, EXPIRATION DATE DECEMBER 31, 2027"

COPYRIGHT BY LITTEN & ASSOCIATES, ARCHITECTS, LLC. NO PORTION OF THESE DRAWINGS MAY BE REPRODUCED, STORED OR TRANSMITTED BY ANY MEANS WITHOUT PRIOR WRITTEN PERMISSION FROM THE ARCHITECT.

REVISIONS

RENOVATION OF UNIVERSITY OF MARYLAND
MEDICAL CENTER OFFICE BUILDING
616 CHARLES STREET
LA PLATA, MARYLAND 20646

R.L. LITTEN & ASSOCIATES, ARCHITECTS, LLC
300 CHARLES STREET, SUITE 4
P.O.BOX 1920, LAPLATA, MD 20646 (301) 934-1471
e-mail: rllitten.architect@verizon.net

KL
RL
3-27-26
25-41

101

WALLS AND INTERIOR PARTITIONS, NONCOMBUSTIBLE

GA FILE NO. WP 1072	GENERIC	1 HOUR FIRE	45 to 49 STC SOUND

GYPSUM WALLBOARD, STEEL STUDS

One layer 5/8" type X gypsum wallboard or gypsum veneer base applied parallel or at right angles to each side of 3⅝" steel studs 24" o.c. with 1" Type S drywall screws 8" o.c. at vertical joints and 12" o.c. at floor and ceiling runners and intermediate studs.

Joints staggered 24" on each side and on opposite sides. Sound tested with 3½" glass fiber friction fit in stud space. **(NLB)**

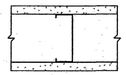

Thickness: 4⅞ "
Limiting Height: Refer to Section IV
Approx. Weight: 6 psf
Fire Test: See WP 1200 (FM WP-45, 6-19-68; OSU T-1770, 8-61; ULC 79T484, 79T500,79T497, 8-12-81, ULC Design W415)
Sound Test: NRCC 816-NV, 2-3-81

GA FILE NO. WP 3510	GENERIC	1 HOUR FIRE	35 to 39 STC SOUND

GYPSUM WALLBOARD, WOOD STUDS

One layer 5/8" type X gypsum wallboard or gypsum veneer base applied parallel or at right angles to each side of 2 x 4 wood studs 24" o.c. with 6d coated nails, 17/8" long, 0.0915" shank, ¼" heads, 7" o.c.

Joints staggered 24" on opposite sides. **(LOAD-BEARING)**

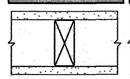

Thickness: 4⅞"
Approx. Weight: 7 psf
Fire Test: UL R3501-47, -48, 9-17-65, Design U309; UL R1319-129, 7-22-70, UL Design U314
Sound Test: NGC 2404, 10-14-70

GA FILE NO. WP 1522	GENERIC	2 HOUR FIRE	55 to 59 STC SOUND

GYPSUM WALLBOARD, STEEL STUDS

Base layer 5/8" type X gypsum wallboard or gypsum veneer base applied parallel or at right angles to each side of 3⅝" steel studs 24" o.c. with 1" Type S drywall screws 24" o.c. **Face** layer 5/8" type X gypsum wallboard or gypsum veneer base applied parallel or at right angles to each side with 1⅝" Type S drywall screws 12" o.c.

Joints staggered 24" each layer and side. Sound tested with 3½" glass fiber friction fit in stud space. **(NLB)**

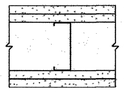

Thickness: 6⅛"
Limiting Height: Refer to Section IV
Approx. Weight: 12 psf
Fire Test: See WP 1548 (WHI-495-0236, 1-30-80)
Sound Test: NRCC 818-NV, 2-3-81

KEY:

- EXIT LIGHT
- COMBINATION EXIT/EMERGENCY LIGHT
- WALL PACK EMERGENCY LIGHT
- ONE HOUR FIRE RATED PARTITION–GA FILE NO' WP 3510 (WOOD STUD) AND WP1072 (MTL. STUI
- TWO HOUR FIRE RATED PARTITION–GA FILE NO'S WP 1522
- (X) MINUTES OF FIRE RESISTANCE RATING

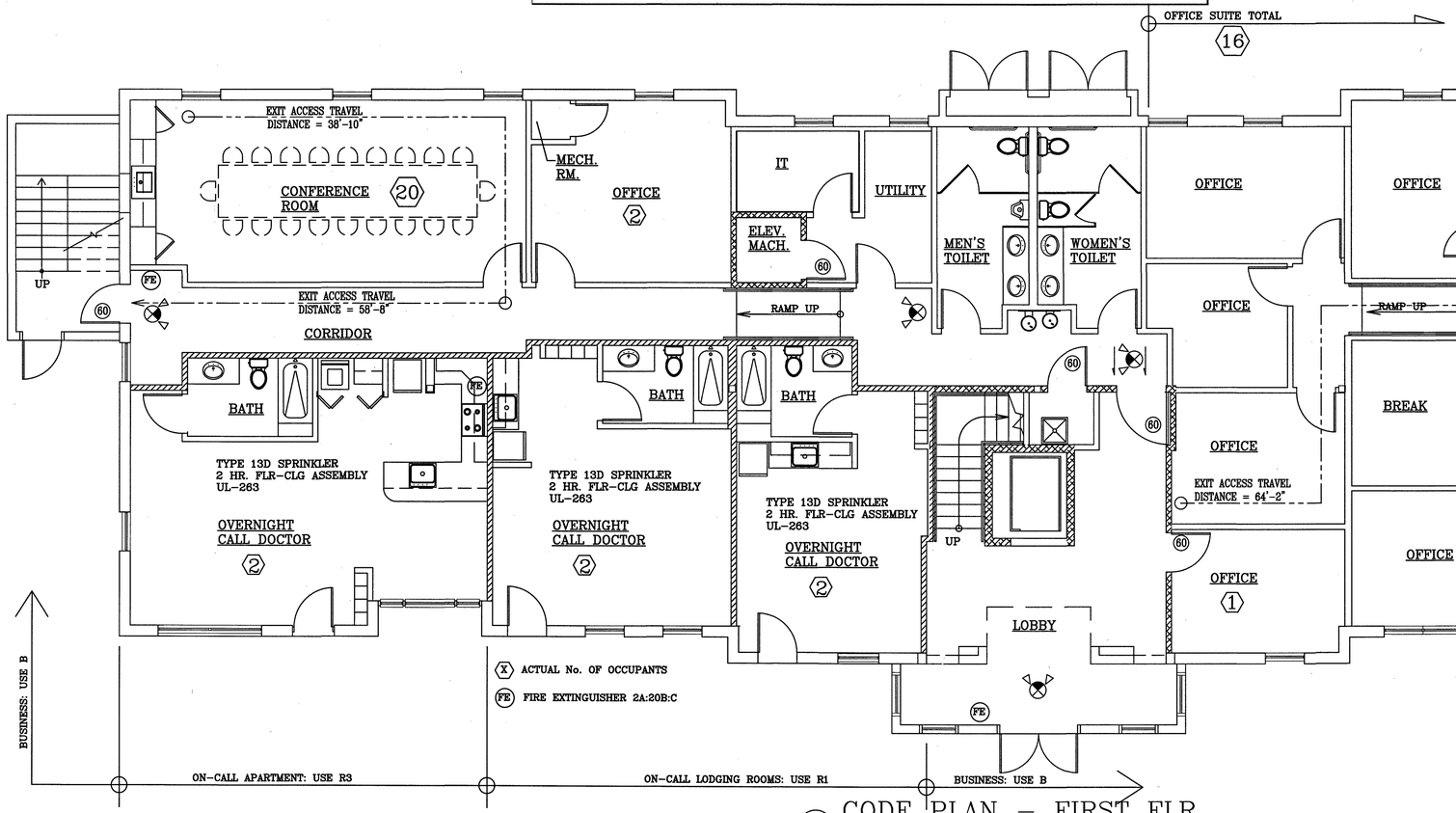

1 CODE PLAN – FIRST FLR.

SCALE: 3/16" = 1'-0"

CODE ANALYSIS-FIRST FLOOR

2021 IEBC/2021 IBC
2024 MD Life Safety Code/2024 NFPA1
COMAR .09.12.53 Handicapped Code

The project is for renovation of an existing multi-tenant office building for use by single tenant.

	Required	Proposed
Use Group(s)-IBC		B/R-1/R-3 ea. fully separated
Use Group(s)-LSC		Business/Apartment/Lodging ea. fully separated
Total Building Area		6230
Type of Construction		V-B
Sprinkler System	On-call rooms only	Yes-Type 13D
Allowable No. of Stories/Height/Area w/o Mod.	2/40/18000	2/20/6230
Fire Resistance Ratings		
Exterior Walls	0	0
Floor Construction-typ.	0	0
Floor/Clg at On-call rooms	2	2
Roof Construction	0	0
Typical Interior Walls	0	0
Demising walls at On-Call	2	2
Exit Stairs walls	1	1
Elevator and Elev Mach Rm	1	1
Non-Combustible Materials	No	No
Fire Protective Signaling System	On-call only single station smoke ala	On-call only single station smoke alarms
Distance of Exit Access Travel	200	67
Floor Area		5877
On-call rooms		1263
Conference		295 net
New Office		328
Ex. Office Suite		2292
Occupancy		45 total
On-call rooms	Actual	6
Conference	1:15	20
New Office	1:150	3
Ex. Office Suite	1:150	16
No. of Exits: On-call rooms	1 each	1 each
No. of Exits: New Offices	2	2
No. of Exits: Ex. Office Suite	2	2
Egress Width: Corridor/Doors	36/68	36/102
Exit Lights	Yes	Yes
Means of Egress Lighting	Yes	Yes
No. of Plumbing Fixtures per Plumbing Code		
Water Closets	4 total bldg.	8 total bldg.
Lavatories	4 total bldg.	8 total bldg.
Slop Sink	1 total bldg.	2 total bldg.
Drinking Fountain	1 total bldg.	1 total bldg.

TOWN OF LA PLATA
APPROVED FOR ISSUE
THIS PLAN APPEARS TO COMPLY WITH THE CODE, BUT IT IS NOT THE AUTHORITY TO VIOLATE ANY CODE ANY CODE OR ORDINANCE.
ALL WORK IS SUBJECT TO INSPECTION APPROVAL
KEEP THESE PLANS AT THE JOBSITE

STATE OF MARYLAND
RONALD L. LITTEN
7959-R
ARCHITECT

REVISIONS

RENOVATION OF UNIVERSITY OF MARYLAND
MEDICAL CENTER OFFICE BUILDING
616 CHARLES STREET
LA PLATA, MARYLAND 20646

COPYRIGHT R. L. LITTEN & ASSOCIATES, ARCHITECTS, LLC. NO PORTION OF THIS DRAWING MAY BE REPRODUCED, STORED OR TRANSMITTED BY ANY MEANS WITHOUT PRIOR WRITTEN PERMISSION FROM THE ARCHITECT.

"I CERTIFY THAT THESE DOCUMENTS WERE PREPARED OR APPROVED BY ME, AND THAT I AM A DULY LICENSED ARCHITECT UNDER THE LAWS OF THE STATE OF MARYLAND. LICENSE NUMBER 7959, EXPIRATION DATE DECEMBER 31, 2027"

R.L. LITTEN & ASSOCIATES, ARCHITECTS, LLC
300 CHARLES STREET, SUITE 4
P.O.BOX 1920, LAPLATA, MD 20646 (301) 934-1471
e-mail: rllitten.architect@verizon.net

KL
RL
3-27-26
25-41

102

Design No. G515

February 04, 2021

Restrained Assembly Rating — 2 Hr.

Unrestrained Assembly Rating — 2 Hr.

Unrestrained Beam Rating — 2 Hr.

This design was evaluated using a load design method other than the Limit States Design Method (e.g., Working Stress Design Method). For jurisdictions employing the Limit States Design Method, such as Canada, a load restriction factor shall be used — See Guide BXUV or BXUV7

*** Indicates such products shall bear the UL or cUL Certification Mark for jurisdictions employing the UL or cUL Certification (such as Canada), respectively.**

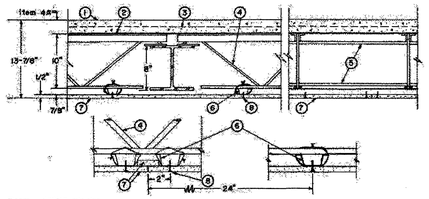

Beam — W8X15, min size.

1. **Normal-Weight Concrete —** Carbonate or silliceous aggregate, 145 + or - 3 pcf unit wt, 3500 psi compressive strength.

2. **Metal Lath —** 3/8 in. rib, 3.4 lb/sq yd expanded steel; tied to each joist at every other rib, and midway between joists at side lap with 18 SWG galv steel wire. As an alternate, the form material for the concrete may be corrugated steel deck 9/16 in. deep of 28 MSG (min) galv steel welded to supports 15 in. O.C. with washers. The concrete thickness shall be measured to the top plane of the steel deck.

3. **Welded Wire Fabric —** 6X6, 10/10 SWG.

4. **Steel Joists —** Type 10J3 min size; used only with 2-1/2 in. thick concrete slab over metal lath or corrugated steel deck, spaced 24 in. O.C., welded to end supports.

4A. **Structural Steel Members — '** — (not shown) As an alternate to steel joists (Item 4), Composite joists with top chord and web partially embedded in concrete slab. Concrete shall flow into the space between the top chord angles to insure embedment of top chord angles in the slab. Max. joist spacing 49-1/4 in. O.C. The composite joists may be used with either 3 in. thick concrete slab cast on removable forms or 2-3/4 in. thick concrete topping over the corrugated steel deck specified in Item 2. When the composite steel joists are used with 3 in. concrete slab cast on removable forms, the ceiling support system will be limited to either the alternate system described in Item 6 or the system described in Item 6A. When the composite steel joists are used with 2-3/4 in. thick concrete topping over the corrugated steel deck, shoring may be required with joists spaced more than 24 in. O.C. to limit dead load deflection to L/240, and only the alternate ceiling support system specified in Item 6 may be used. The composite joist floor shall be loaded no more than the manufacturer's recommended published loadings.

Midwestern Joists, Inc. — Type C.

5. **Bridging —** 1/2 in. diam continuous steel bar stock, welded to top and bottom chords of each joist.

6. **Furring Channels —** 25 MSG galv steel, 2-5/8 in. wide at top and 1-3/8 in. wide at bottom by 7/8 in. deep, spaced 24 in. O.C. Channels secured to bottom chord of joists with a double strand of 18 SWG galv steel wire. Channels spliced with adjoining pieces overlapped 6 in. and tied together with double strand of 18 SWG galv steel wire at each end of overlap. At wallboard and joints a second furring channel, either continuous or spanning across three joists when the joists are spaced 49-1/4 in. O.C. or across four joists when the joists are spaced 24 in. O.C. and extending 6 in. beyond the outside joists. The second furring channel shall be spaced 4 in. O.C. from the primary furring channel and shall be wire tied to the bottom chord of each joist with a double strand of 18 SWG galv steel wire. If the second furring channel is continuous, spacing of wire ties shall be the same as for the primary furring channel.

6A. **Alternate Suspension System —** (not shown) Cold-rolled channels spaced 48 in. OC and suspended perpendicular from lower chord of joists, with 8 SWG galv steel wire spaced 48 or 49-1/4 in. OC along channels. Furring channels, as described in Item 6, positioned perpendicular to the cold-rolled channels and spaced 24 in. OC except at the wallboard end joints as noted above. The furring channels are secured with double strand of 18 SWG galv steel wire to each cold-rolled channel.

7. **Gypsum Board* —** 1/2 or 5/8 in. thick, 4 ft wide. Sheets of wallboard or lath installed with long dimension perpendicular to furring channels. When furring channels are tied directly to bottom chord of joists, side joints of wallboard sheets shall be located midway between steel joists. Wallboard sheets fastened to furring channels with wallboard screws spaced 12 in. OC and located 1-1/2 in. from butted side joints. At end joints wallboard fastened to each of the two furring channels (approx. 2 in. from end of each board) with screws spaced 12 in. OC. End joints of wallboard sheets in adjacent courses need not be staggered. Protection at end joints is provided by 2 in. wide strip of 1/2 or 5/8 in. thick wallboard placed on top of joint, between furring channels, for entire length of end joint.

AMERICAN GYPSUM CO — Types AG-C.

CABOT MANUFACTURING ULC — Type C

CERTAINTEED GYPSUM INC — Type C, Type LGFC-C/A

CGC INC — Type C, IP-X2 or ICP-AR, ULIX.

GEORGIA-PACIFIC GYPSUM L L C — Types 5, DAPC, TG-C.

NATIONAL GYPSUM CO — Types FSK-C, FSW-C.

PABCO BUILDING PRODUCTS L L C, DBA PABCO GYPSUM — Types C, PG-C.

PANEL REY S A — Type PRC

THAI GYPSUM PRODUCTS PCL — Type C.

THE SIAM GYPSUM INDUSTRY (SONGKHLA) CO — Type C

UNITED STATES GYPSUM CO — Type C, IP-X2, IPC-AR, ULIX.

USG BORAL DRYWALL SFZ LLC — Type C

USG MEXICO S A DE C V — Type C, IP-X2 or IPC-AR.

8. **Screw, Wallboard —** No. 6 Phillips-type, self-drilling and self-tapping, 1 in. long with 11/32-in. diam screw head. Screw heads may be either exposed or covered with joint cement.

9. **Alternate Finishing System —** (Not Shown, optional) — Wallboard joints covered with 2-1/2 in. wide pressure-sensitive glass fiber tape, or glass fiber tape attached with wire staples. For tapered, rounded-edge wallboard, joints covered with fiber tape and joint compound. As an alternate, nom 3/32 in. thick gypsum veneer plaster may be applied to the entire surface of Classified veneer baseboard. Joints reinforced.

KEY:

- EXIT LIGHT
- COMBINATION EXIT/EMERGENCY LIGHT
- WALL PACK EMERGENCY LIGHT
- ONE HOUR FIRE RATED PARTITION–GA FILE NO'S WP 3510 (WOOD STUD) AND WP1072 (MTL. STUD)
- TWO HOUR FIRE RATED PARTITION–GA FILE NO'S WP 1522
- (X) MINUTES OF FIRE RESISTANCE RATING

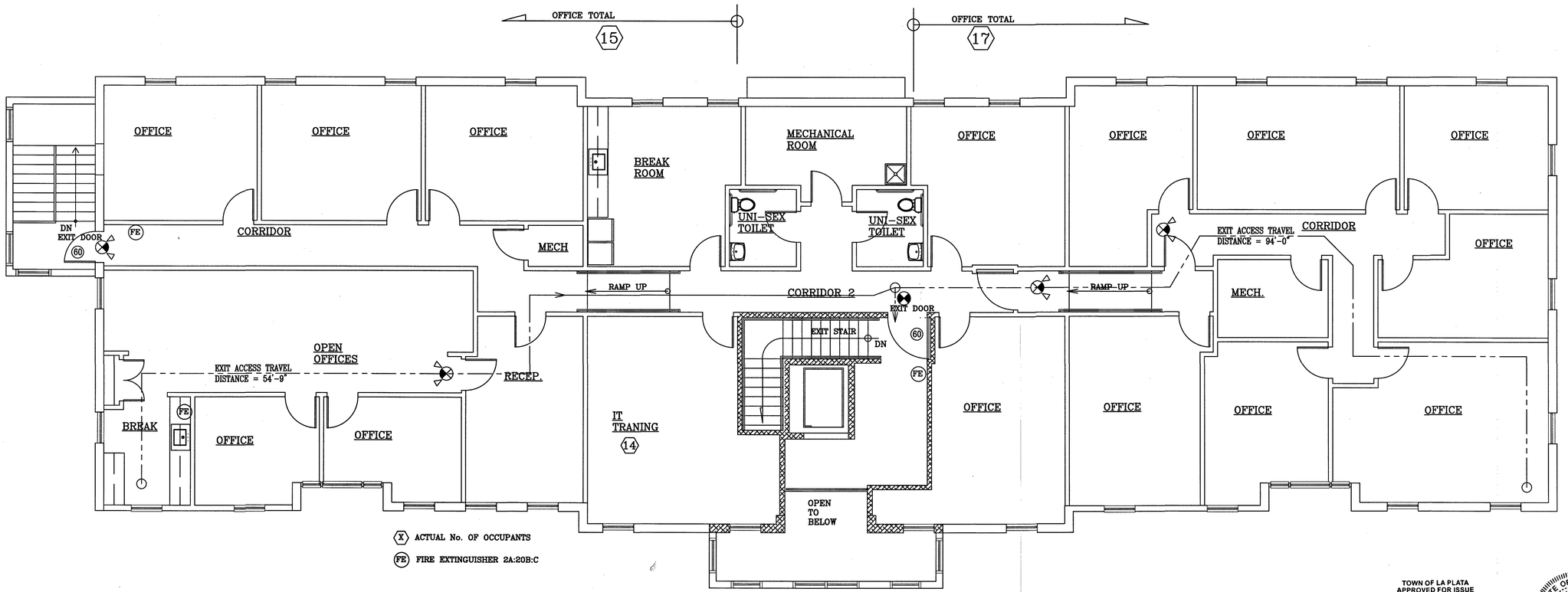

1 CODE PLAN – SECOND FLR.

SCALE: 3/16" = 1'-0"

CODE ANALYSIS-SECOND FLOOR

2021 IEBC/2021 IBC
2024 MD Life Safety Code/2024 NFPA1
COMAR .09.12.53 Handicapped Code

The project is for renovation of an existing multi-tenant building for use by a single tenant.

	Required	Proposed
Use Group(s)-IBC		B/R-1/R-3 ea. fully separated
Use Group(s)-LSC		Business/Apartment/Lodging ea. fully separated
Total Building Area		6230
Type of Construction		V-B
Sprinkler System	On-call rooms only	Yes-Type 13D
Allowable No. of Stories/Height/Area w/o Mod.	2/40/18000	2/20/6230
Fire Resistance Ratings		
Exterior Walls	0	0
Floor Construction-typ.	0	0
Floor/Clg at On-call rooms	2	2
Roof Construction	0	0
Typical Interior Walls	0	0
Exit Stairs walls	1	1
Elevator and Elev Mach Rm	1	1
Non-Combustible Materials	No	No
Fire Protective Signaling System	No	No
Distance of Exit Access Travel	200	94
Floor Area		5743
Office		4593
IT Training		321
Occupancy		46 total
Office	1:150	32
IT Training	actual no.	14
No. of Exits	2	2
Egress Width: Corridor/Doors	36/68	44/68
Exit Lights	Yes	Yes
Means of Egress Lighting	Yes	Yes
No. of Plumbing Fixtures per Plumbing Code		
Water Closets	4 total bldg.	8 total bldg.
Lavatories	4 total bldg.	8 total bldg.
Slop Sink	1 total bldg.	2 total bldg.
Drinking Fountain	1 total bldg.	1 total bldg.

TOWN OF LA PLATA
APPROVED FOR ISSUE
THIS PLAN APPEARS TO COMPLY WITH THE CODE, BUT IT IS NOT THE AUTHORITY TO VIOLATE ANY CODE ANY CODE OR ORDINANCE. ALL WORK IS SUBJECT TO INSPECTION APPROVAL
KEEP THESE PLANS AT THE JOBSITE

STATE OF MARYLAND — RONALD LEE LITTEN — 1959-R — ARCHITECT

I CERTIFY THAT THESE DOCUMENTS WERE PREPARED OR APPROVED BY ME, AND THAT I AM A DULY LICENSED ARCHITECT UNDER THE LAWS OF THE STATE OF MARYLAND. LICENSE NUMBER 7959, EXPIRATION DATE DECEMBER 31, 2027"

REVISIONS

RENOVATION OF UNIVERSITY OF MARYLAND
MEDICAL CENTER OFFICE BUILDING
616 CHARLES STREET
LA PLATA, MARYLAND 20646

COPYRIGHT RL LITTEN & ASSOCIATES, ARCHITECTS, LLC. NO PORTION OF THESE DRAWINGS MAY BE REPRODUCED, REVISED OR TRANSMITTED BY ANY MEANS WITHOUT PRIOR WRITTEN PERMISSION FROM THE ARCHITECT.

R.L. LITTEN & ASSOCIATES, ARCHITECTS, LLC
300 CHARLES STREET, SUITE 4
P.O.BOX 1920, LAPLATA, MD 20646 (301) 934-1471
e-mail: rllitten.architect@verizon.net

KL
RL
3-27-26
25-41

103

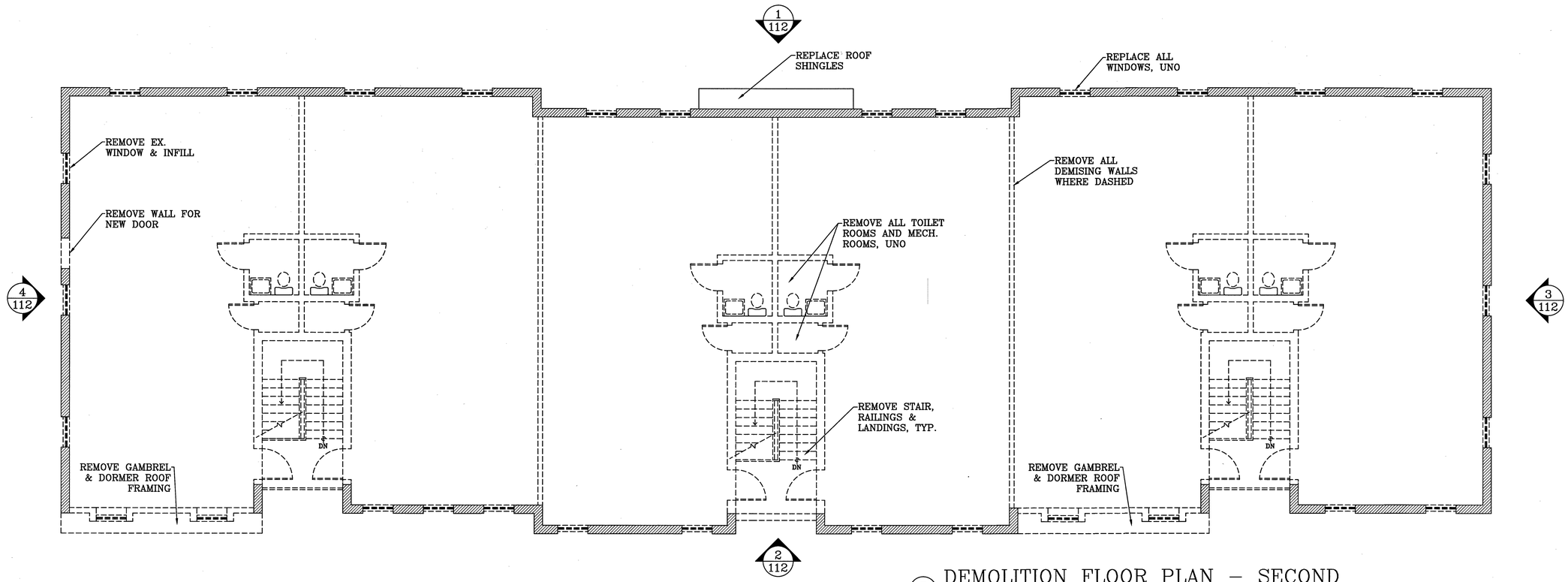

2 DEMOLITION FLOOR PLAN – SECOND

SCALE: 3/16" = 1'-0"

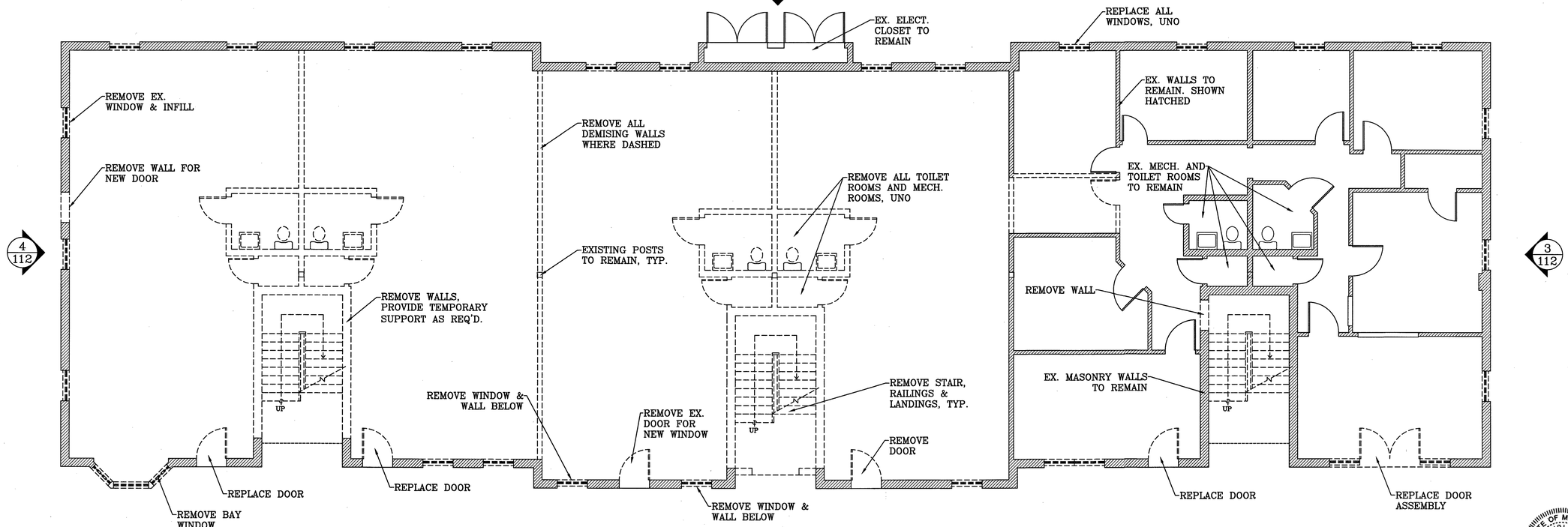

1 DEMOLITION FLOOR PLAN – FIRST

SCALE: 3/16" = 1'-0"

TOWN OF LA PLATA
APPROVED FOR ISSUE
THIS PLAN APPEARS TO COMPLY WITH THE CODE, BUT IT IS NOT THE AUTHORITY TO VIOLATE ANY CODE ANY CODE OR ORDINANCE
ALL WORK IS SUBJECT TO INSPECTION APPROVAL
KEEP THESE PLANS AT THE JOBSITE

STATE OF MARYLAND
REGINALD L. LITTEN
7959-R
ARCHITECT

I CERTIFY THAT THESE DOCUMENTS WERE PREPARED OR APPROVED BY ME, AND THAT I AM A DULY LICENSED ARCHITECT UNDER THE LAWS OF THE STATE OF MARYLAND. LICENSE NUMBER 7959, EXPIRATION DATE DECEMBER 31, 2027

COPYRIGHT R.L.LITTEN & ASSOCIATES, ARCHITECTS, LLC. NO PORTION OF THIS DRAWING MAY BE REPRODUCED, STORED OR TRANSMITTED BY ANY MEANS WITHOUT PRIOR WRITTEN PERMISSION FROM THE ARCHITECT.

Revisions

RENOVATION OF UNIVERSITY OF MARYLAND MEDICAL CENTER OFFICE BUILDING

616 CHARLES STREET
LA PLATA, MARYLAND 20646

R.L. LITTEN & ASSOCIATES, ARCHITECTS, LLC
300 CHARLES STREET,SUITE 4
P.O. BOX 1920, LAPLATA, MD 20646 (301) 934-1471

WDU
RL
3-27-26
25-41

111

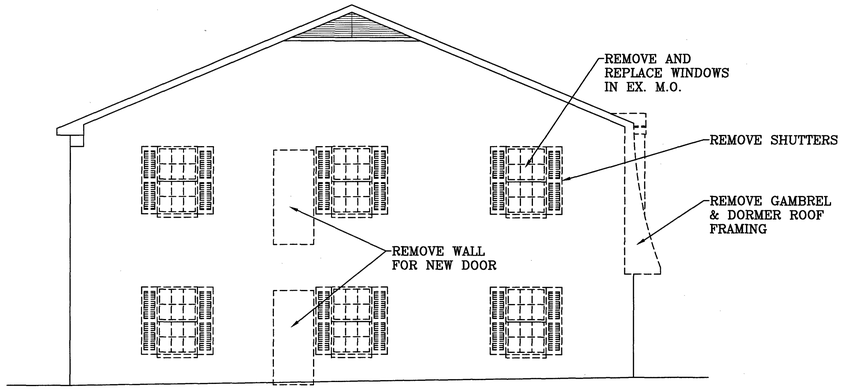

4 DEMOLTION ELEVATION – LEFT SIDE

SCALE: 3/16" = 1'-0"

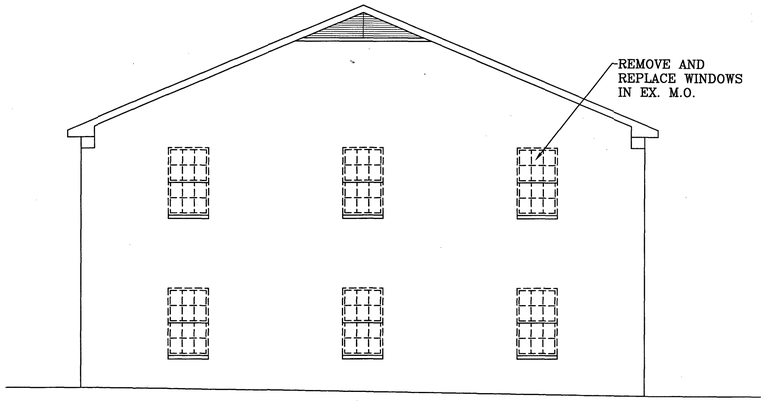

3 DEMOLTION ELEVATION – RIGHT SIDE

SCALE: 3/16" = 1'-0"

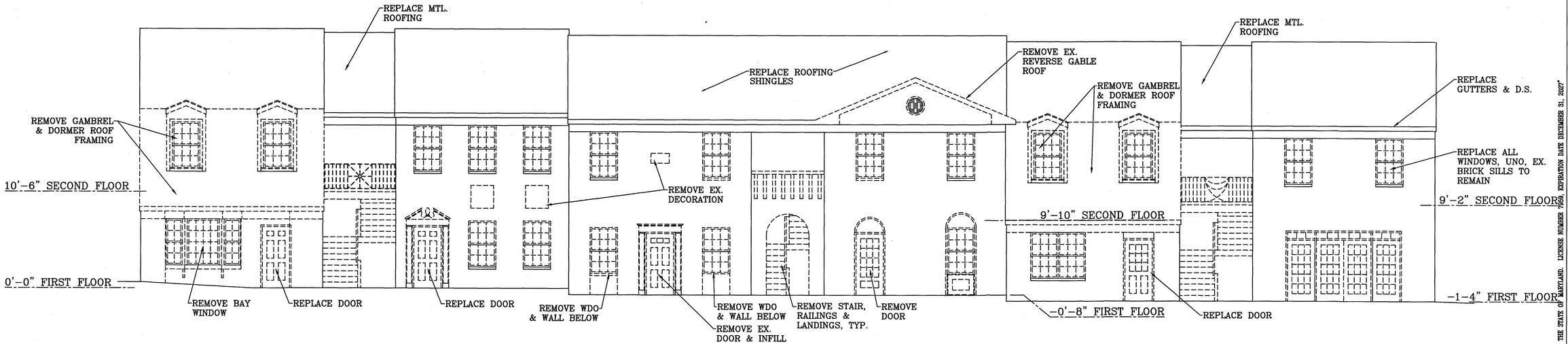

2 DEMOLTION ELEVATION – FRONT

SCALE: 3/16" = 1'-0"

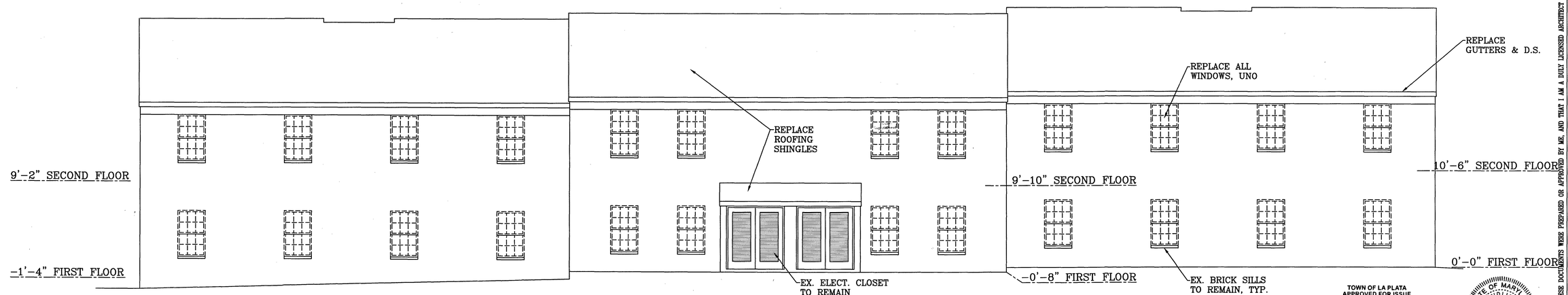

1 DEMOLITION ELEVATION – REAR

SCALE: 3/16" = 1'-0"

TOWN OF LA PLATA
APPROVED FOR ISSUE
THIS PLAN APPEARS TO COMPLY WITH THE CODE, BUT IT IS NOT THE AUTHORITY TO VIOLATE ANY CODE ANY CODE OR ORDINANCE
ALL WORK IS SUBJECT TO INSPECTION APPROVAL
KEEP THESE PLANS AT THE JOBSITE

STATE OF MARYLAND · RONALD L. LITTEN · 7959-R · ARCHITECT

I CERTIFY THAT THESE DOCUMENTS WERE PREPARED OR APPROVED BY ME, AND THAT I AM A DULY LICENSED ARCHITECT UNDER THE LAWS OF THE STATE OF MARYLAND. LICENSE NUMBER 7959, EXPIRATION DATE DECEMBER 31, 2027"

Revisions

RENOVATION OF UNIVERSITY OF MARYLAND MEDICAL CENTER OFFICE BUILDING

616 CHARLES STREET
LA PLATA, MARYLAND 20646

COPYRIGHT R. LITTEN & ASSOCIATES, ARCHITECTS, LLC. NO PORTION OF THIS DRAWING MAY BE REPRODUCED, STORED OR TRANSMITTED BY ANY MEANS WITHOUT PRIOR WRITTEN PERMISSION FROM THE ARCHITECT.

R.L. LITTEN & ASSOCIATES, ARCHITECTS, LLC
300 CHARLES STREET,SUITE 4
P.O. BOX 1920, LAPLATA, MD 20646 (301) 934-1471

WDU
RL
3-27-26
25-41

112

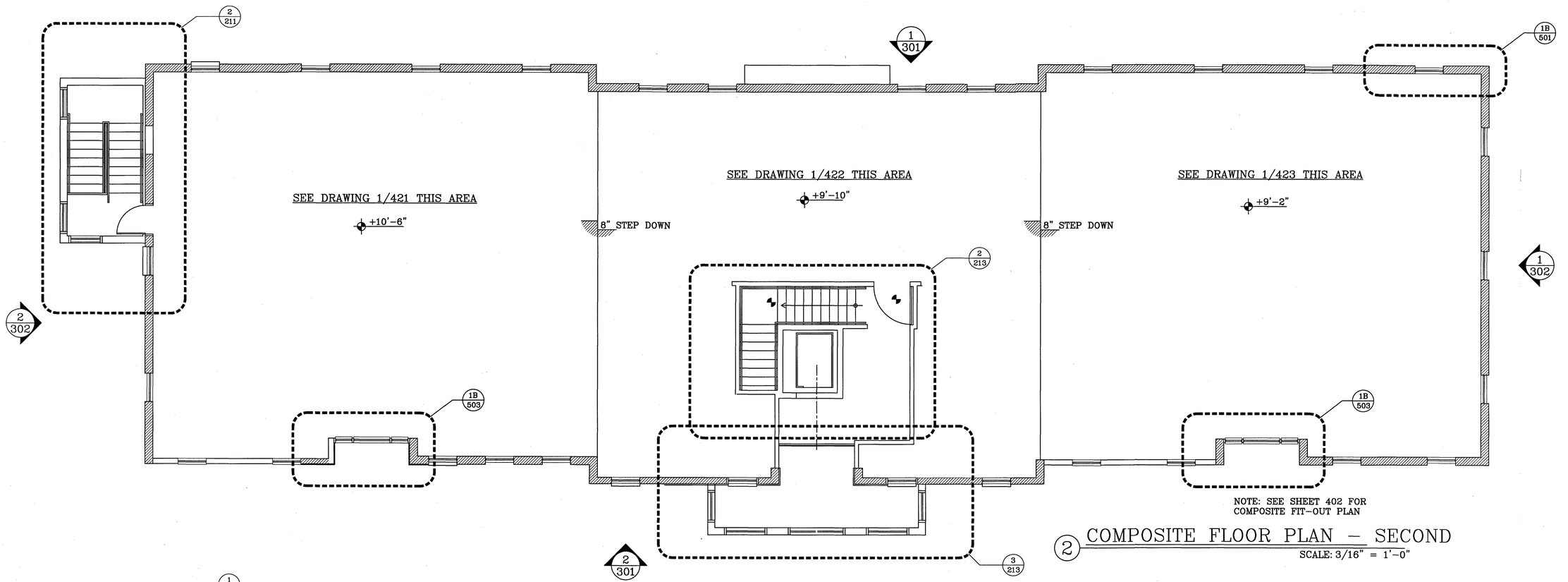

NOTE: SEE SHEET 402 FOR COMPOSITE FIT-OUT PLAN

(2) COMPOSITE FLOOR PLAN – SECOND

SCALE: 3/16" = 1'-0"

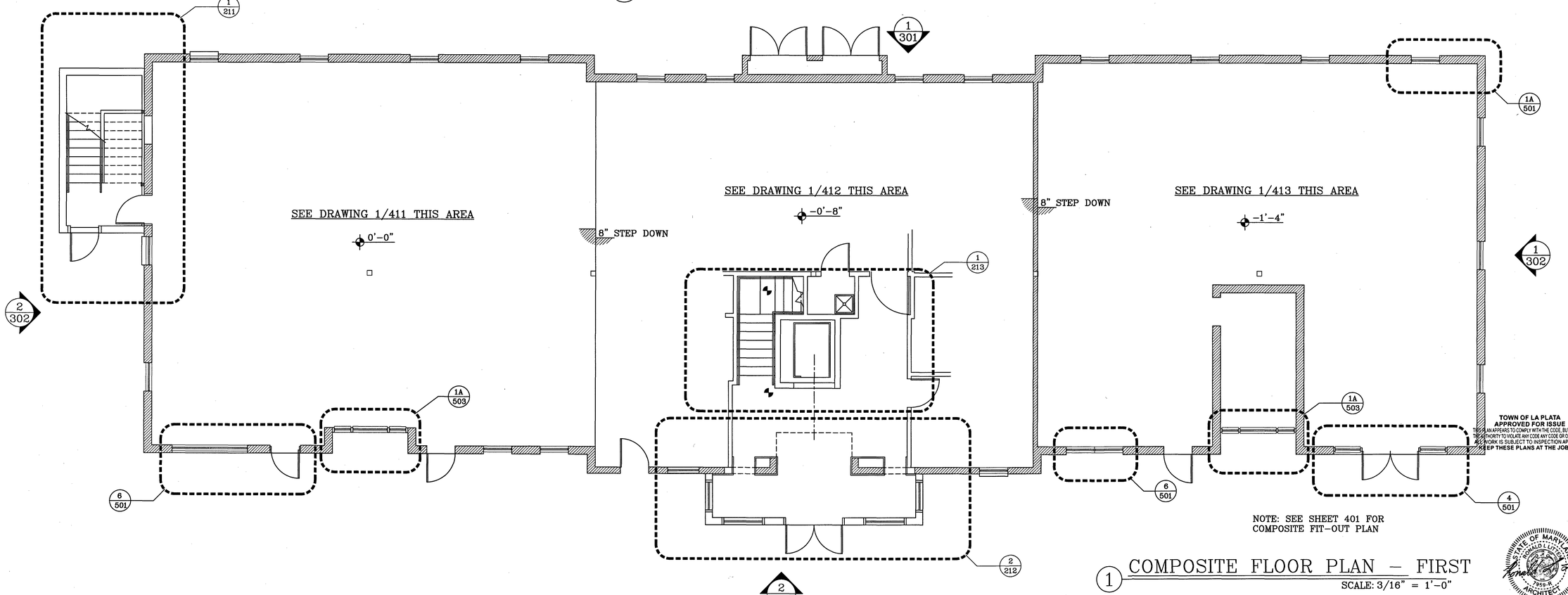

TOWN OF LA PLATA
APPROVED FOR ISSUE
THIS PLAN APPEARS TO COMPLY WITH THE CODE. BUT IT IS NOT THE AUTHORITY TO VIOLATE ANY CODE ANY CODE OR ORDINANCE ALL WORK IS SUBJECT TO INSPECTION APPROVAL
KEEP THESE PLANS AT THE JOBSITE

NOTE: SEE SHEET 401 FOR COMPOSITE FIT-OUT PLAN

(1) COMPOSITE FLOOR PLAN – FIRST

SCALE: 3/16" = 1'-0"

I CERTIFY THAT THESE DOCUMENTS WERE PREPARED OR APPROVED BY ME, AND THAT I AM A DULY LICENSED ARCHITECT UNDER THE LAWS OF THE STATE OF MARYLAND. LICENSE NUMBER 7959, EXPIRATION DATE DECEMBER 31, 2027"

COPYRIGHT BY R.L. LITTEN & ASSOCIATES, ARCHITECTS, LLC. NO PORTION OF THIS DRAWING MAY BE REPRODUCED, STORED OR TRANSMITTED BY ANY MEANS WITHOUT PRIOR WRITTEN PERMISSION FROM THE ARCHITECT.

Revisions

RENOVATION OF UNIVERSITY OF MARYLAND MEDICAL CENTER OFFICE BUILDING

616 CHARLES STREET
LA PLATA, MARYLAND 20646

R.L. LITTEN & ASSOCIATES, ARCHITECTS, LLC
300 CHARLES STREET, SUITE 4
P.O. BOX 1920, LAPLATA, MD 20646 (301) 934-1471

WDU
RL
3-27-26
25-41

201

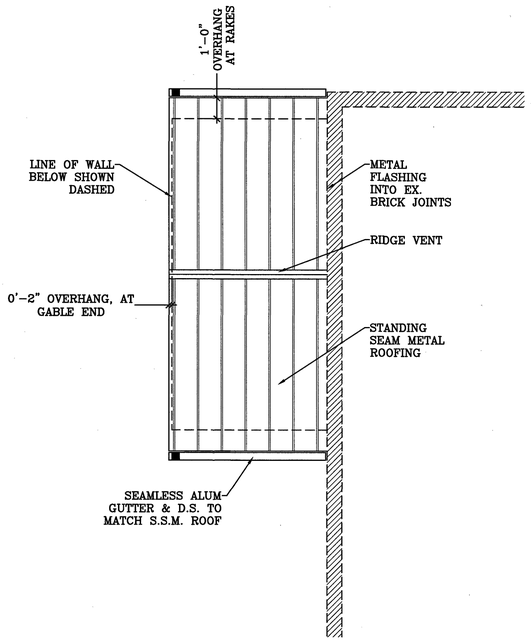

3 ROOF PLAN– STAIR

SCALE: 1/4" = 1'-0"

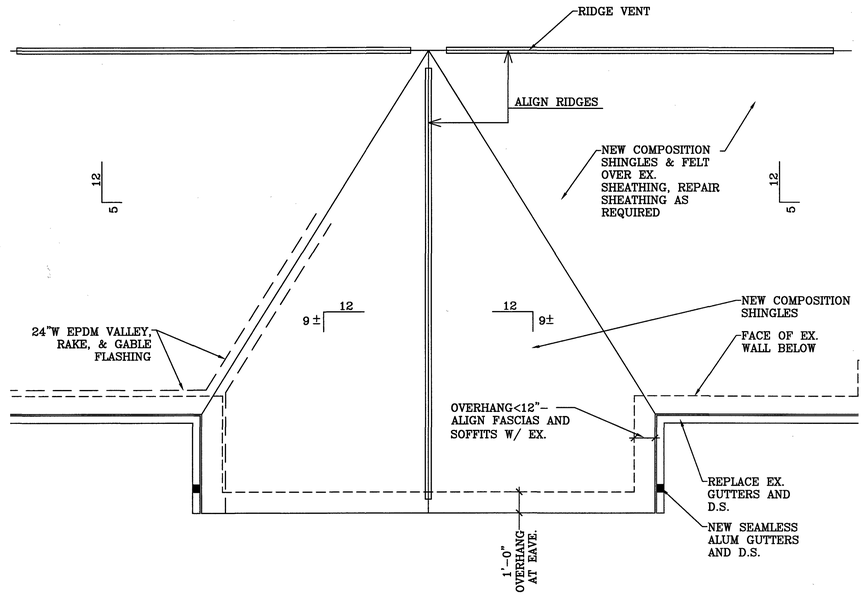

2 ROOF PLAN– LOBBY

SCALE: 3/8" = 1'-0"

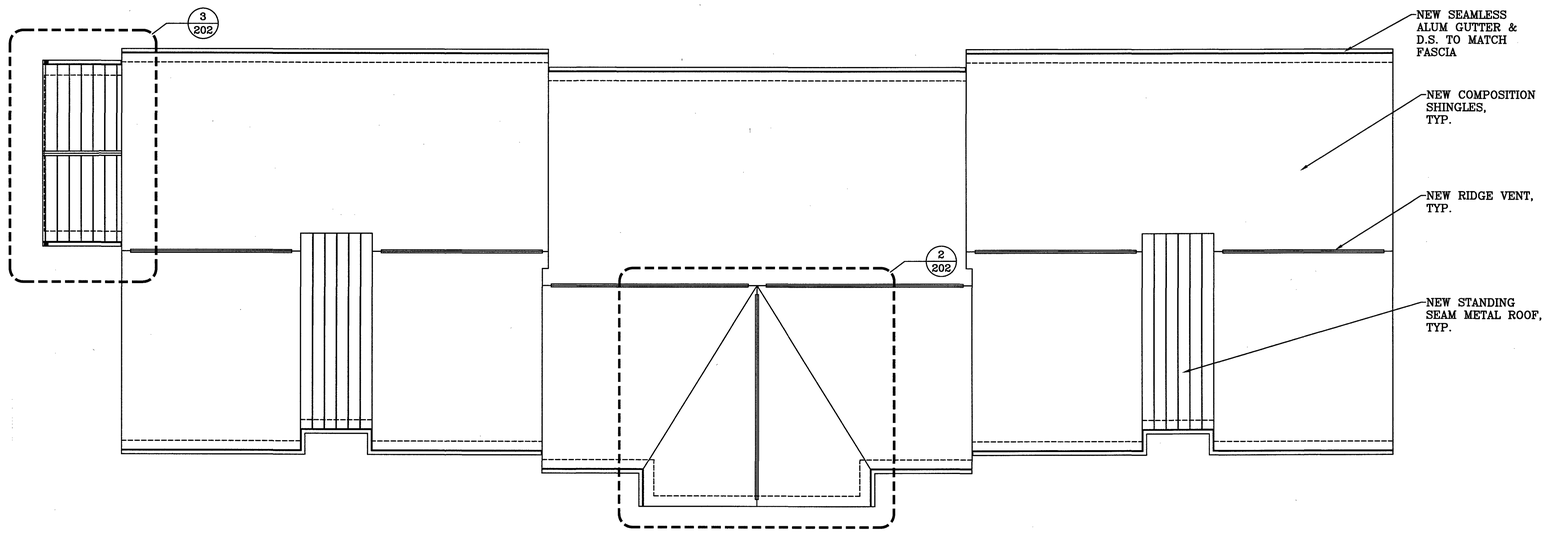

1 COMPOSITE ROOF PLAN

SCALE: 1/8" = 1'-0"

TOWN OF LA PLATA
APPROVED FOR ISSUE
THIS PLAN APPEARS TO COMPLY WITH THE CODE, BUT IT IS NOT THE AUTHORITY TO VIOLATE ANY CODE ANY CODE OR ORDINANCE
ALL WORK IS SUBJECT TO INSPECTION APPROVAL
KEEP THESE PLANS AT THE JOBSITE

STATE OF MARYLAND · RONALD L. LITTEN · 7959-R · ARCHITECT

Revisions

RENOVATION OF UNIVERSITY OF MARYLAND MEDICAL CENTER OFFICE BUILDING

616 CHARLES STREET
LA PLATA, MARYLAND 20646

COPYRIGHT R. LITTEN & ASSOCIATES, ARCHITECTS, LLC. NO PORTION OF THIS DRAWING MAY BE REPRODUCED, STORED OR TRANSMITTED BY ANY MEANS WITHOUT PRIOR WRITTEN PERMISSION FROM THE ARCHITECT.

R.L. LITTEN & ASSOCIATES, ARCHITECTS, LLC
300 CHARLES STREET,SUITE 4
P.O. BOX 1920, LAPLATA, MD 20646 (301) 934-1471

WDU
RL
3-27-26
25-41

202

"I CERTIFY THAT THESE DOCUMENTS WERE PREPARED OR APPROVED BY ME, AND THAT I AM A DULY LICENSED ARCHITECT UNDER THE LAWS OF THE STATE OF MARYLAND. LICENSE NUMBER 7959, EXPIRATION DATE DECEMBER 31, 2027"

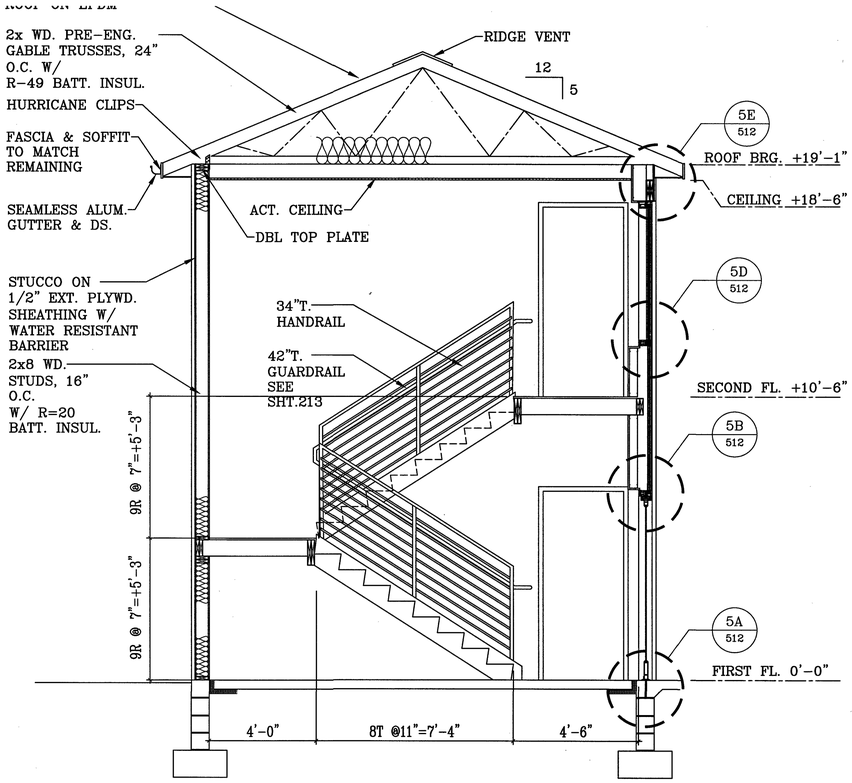

3 SECTION– STAIR

SCALE: 3/8" = 1'-0"

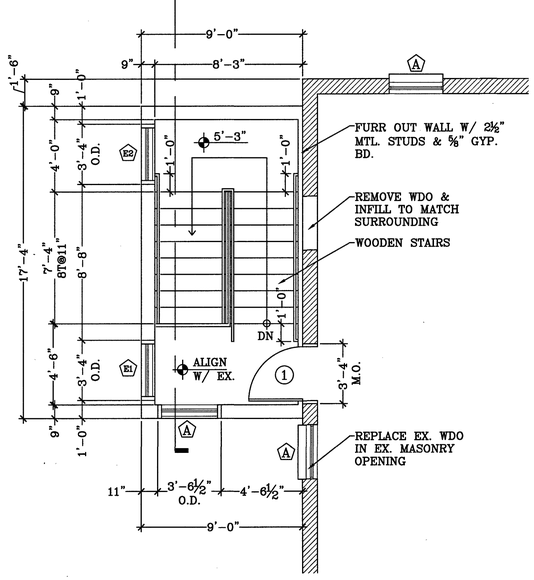

2 SECOND FLOOR PLAN – STAIR

SCALE: 1/4" = 1'-0"

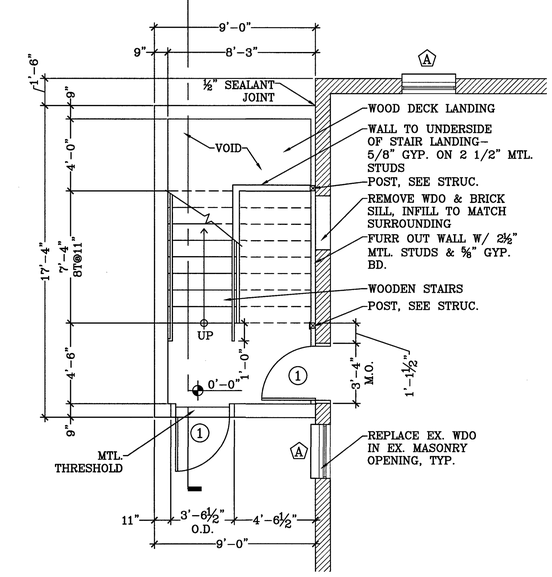

1 FIRST FLOOR PLAN – STAIR

SCALE: 1/4" = 1'-0"

TOWN OF LA PLATA
APPROVED FOR ISSUE
THIS PLAN APPEARS TO COMPLY WITH THE CODE, BUT IT IS NOT THE AUTHORITY TO VIOLATE ANY CODE ANY CODE OR ORDINANCE
ALL WORK IS SUBJECT TO INSPECTION APPROVAL
KEEP THESE PLANS AT THE JOBSITE

STATE OF MARYLAND · RONALD L. LITTEN · 7959-R · ARCHITECT

"I CERTIFY THAT THESE DOCUMENTS WERE PREPARED OR APPROVED BY ME, AND THAT I AM A DULY LICENSED ARCHITECT UNDER THE LAWS OF THE STATE OF MARYLAND. LICENSE NUMBER 7959, EXPIRATION DATE DECEMBER 31, 2027"

Revisions

RENOVATION OF UNIVERSITY OF MARYLAND MEDICAL CENTER OFFICE BUILDING

616 CHARLES STREET
LA PLATA, MARYLAND 20646

COPYRIGHT R.L LITTEN & ASSOCIATES ARCHITECTS, LLC. NO PORTION OF THIS DRAWING MAY BE REPRODUCED, STORED OR TRANSMITTED BY ANY MEANS WITHOUT PRIOR WRITTEN PERMISSION FROM THE ARCHITECT.

R.L. LITTEN & ASSOCIATES, ARCHITECTS, LLC
300 CHARLES STREET,SUITE 4
P.O. BOX 1920, LAPLATA, MD 20646 (301) 934-1471

WDU
RL
3-27-26
25-41

211

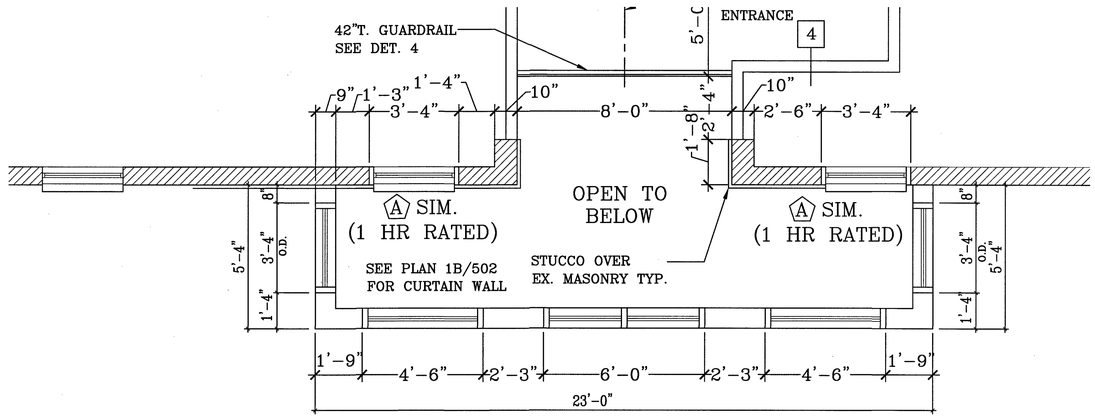

2 SECOND FLOOR PLAN – LOBBY

SCALE: 3/8" = 1'-0"

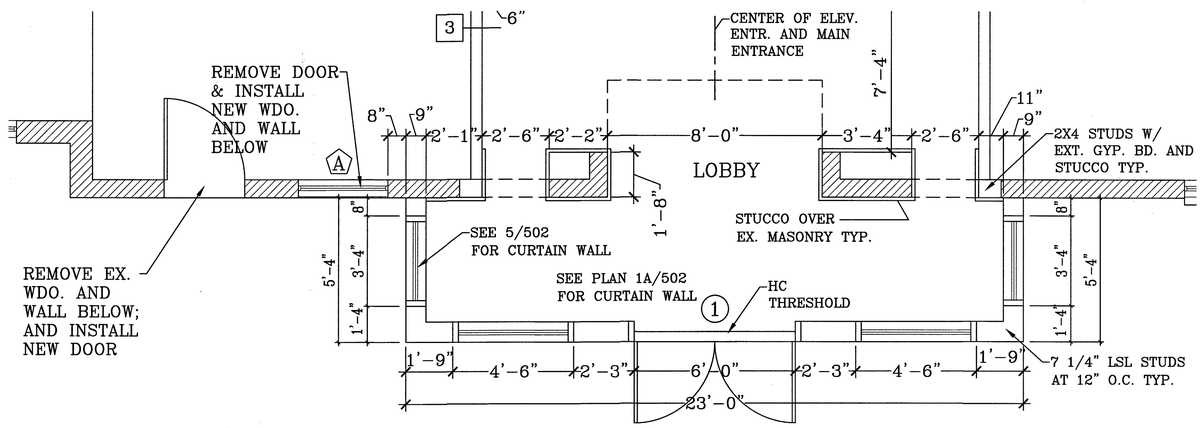

1 FIRST FLOOR PLAN – LOBBY

SCALE: 3/8" = 1'-0"

TOWN OF LA PLATA
APPROVED FOR ISSUE
THIS PLAN APPEARS TO COMPLY WITH THE CODE, BUT IT IS NOT THE AUTHORITY TO VIOLATE ANY CODE ANY CODE OR ORDINANCE
ALL WORK IS SUBJECT TO INSPECTION APPROVAL
KEEP THESE PLANS AT THE JOBSITE

STATE OF MARYLAND
RONALD L. LITTEN
7959
ARCHITECT

I CERTIFY THAT THESE DOCUMENTS WERE PREPARED OR APPROVED BY ME, AND THAT I AM A DULY LICENSED ARCHITECT UNDER THE LAWS OF THE STATE OF MARYLAND. LICENSE NUMBER 7959, EXPIRATION DATE DECEMBER 31, 2027"

COPYRIGHT RL LITTEN & ASSOCIATES, ARCHITECTS, LLC. NO PORTION OF THIS DRAWING MAY BE REPRODUCED, STORED OR TRANSMITTED BY ANY MEANS WITHOUT PRIOR WRITTEN PERMISSION FROM THE ARCHITECT.

Revisions

RENOVATION OF UNIVERSITY OF MARYLAND MEDICAL CENTER OFFICE BUILDING

616 CHARLES STREET
LA PLATA, MARYLAND 20646

R.L. LITTEN & ASSOCIATES, ARCHITECTS, LLC
300 CHARLES STREET,SUITE 4
P.O. BOX 1920, LAPLATA, MD 20646 (301) 934-1471

WDU
RL
3-27-26
25-41

212

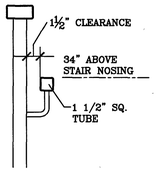

6 SECTION–HANDRAIL

SCALE: 1 1/2" = 1'–0"

PARTITION SCHEDULE					
	Studding	Finish	Height	Rating	Notes
1	3 5/8" MTL., 16" O.C.	1/2" Gyp. board-both sides	To structural deck above	— —	3 1/2" Sound insulation
2	3 5/8" MTL., 16" O.C.	1/2" Gyp. board-one side; 1/2" MR Gyp. board-"wet" side	To structural deck above	— —	3 1/2" Sound insulation
3	3 5/8" MTL., 16" O.C.	2-Layers 5/8" FR Gyp. board-both sides	To structural deck above	2 hr.	GA File No. WP 1522 M.R. gyp. bd.-"Wet" side 3 1/2" Sound insulation
4	3 5/8" MTL., 16" O.C.	1-Layer 5/8" FR Gyp. board-both sides	To structural deck above	1 hr.	GA File No. WP 1072 3 1/2" Sound insulation
5	6" MTL., 16" O.C.	1-Layer 5/8" FR Gyp. board-both sides	To structural deck above	1 hr.	GA File No. 1072 M.R. gyp. bd.-"Wet" side 3 1/2" Sound insulation
6	2x6 WD. STUDS, 16" O.C.	1-Layer 5/8" FR Gyp. board-both sides	To roof top of shaft	1 hr.	

NOTE: ALL METAL STUDS ARE 25 GA. UNO.

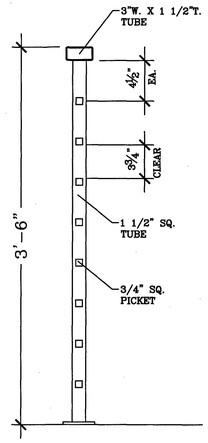

5 SECTION–GUARDRAIL

SCALE: 1 1/2" = 1'–0"

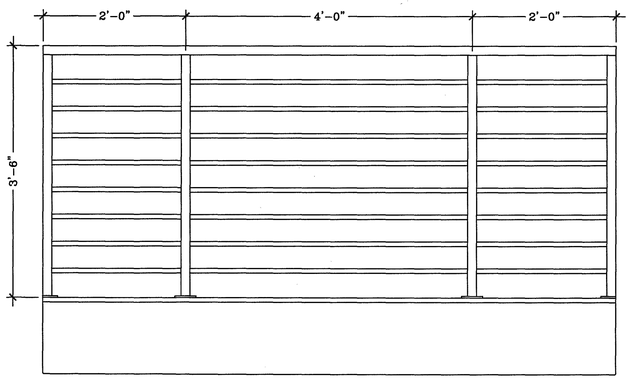

4 ELEVATION–GUARDRAIL

SCALE: 1" = 1'–0"

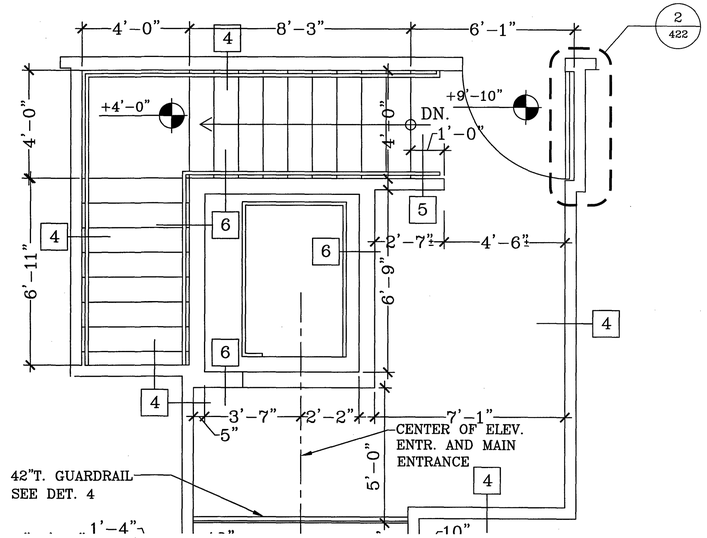

2 SECOND FLOOR

SCALE: 3/8" = 1'–0"

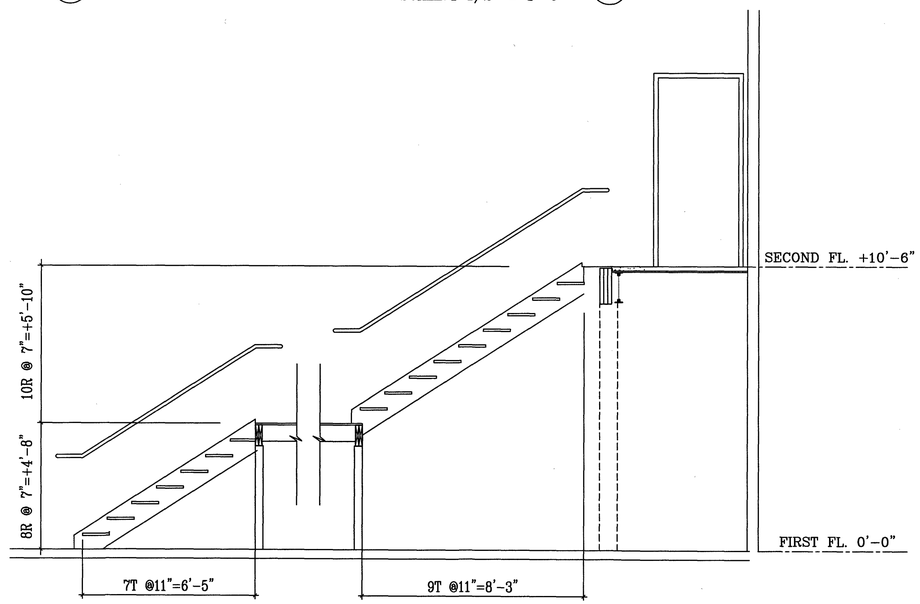

3 STAIR SECTION DETAIL

SCALE: 3/8" = 1'–0"

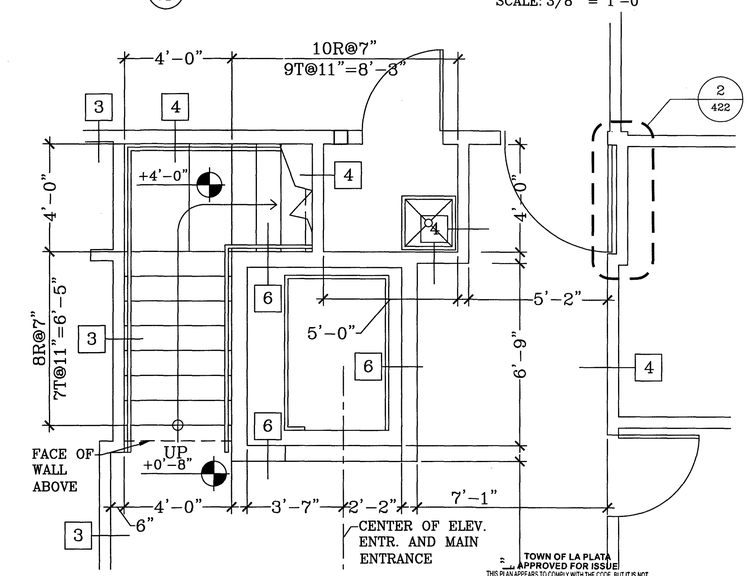

1 FIRST FLOOR

SCALE: 3/8" = 1'–0"

Revisions

RENOVATION OF UNIVERSITY OF MARYLAND MEDICAL CENTER OFFICE BUILDING

616 CHARLES STREET
LA PLATA, MARYLAND 20646

R.L. LITTEN & ASSOCIATES, ARCHITECTS, LLC
300 CHARLES STREET, SUITE 4
P.O. BOX 1920, LAPLATA, MD 20646 (301) 934-1471

COPYRIGHT R. LITTEN & ASSOCIATES, ARCHITECTS, LLC. NO PORTION OF THESE DRAWING MAY BE REPRODUCED, STORED OR TRANSMITTED BY ANY MEANS WITHOUT PRIOR WRITTEN PERMISSION FROM THE ARCHITECT.

I CERTIFY THAT THESE DOCUMENTS WERE PREPARED OR APPROVED BY ME, AND THAT I AM A DULY LICENSED ARCHITECT UNDER THE LAWS OF THE STATE OF MARYLAND. LICENSE NUMBER 7959, EXPIRATION DATE DECEMBER 31, 2027"

WDU
RL
3-27-26
25-41
213

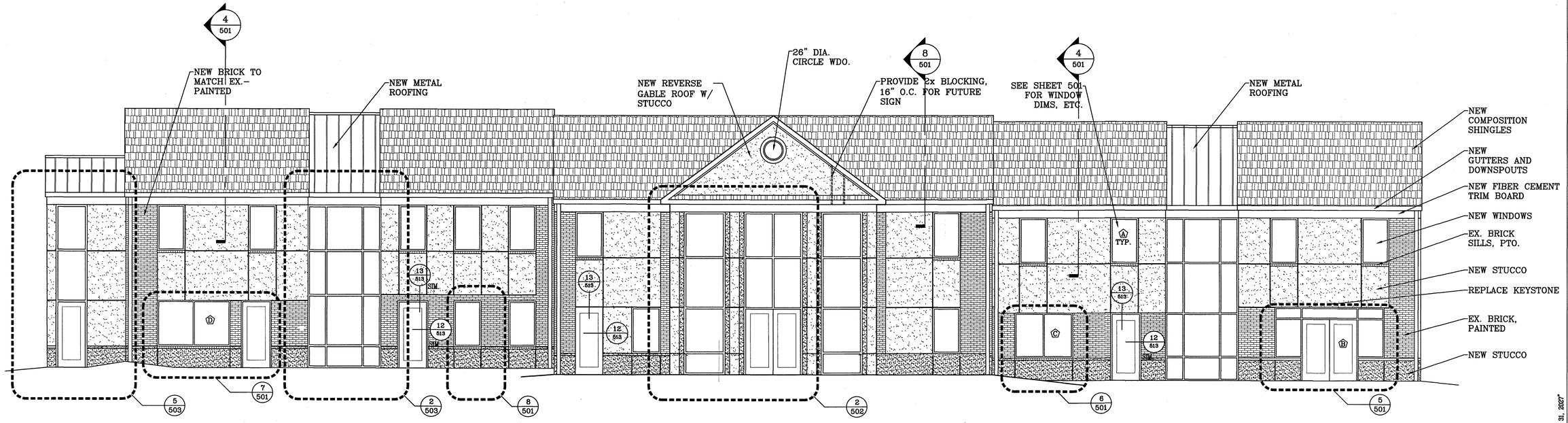

2 COMPOSITE ELEVATION – FRONT

SCALE: 3/16" = 1'-0"

1 COMPOSITE ELEVATION – REAR

SCALE: 3/16" = 1'-0"

TOWN OF LA PLATA
APPROVED FOR ISSUE
THIS PLAN APPEARS TO COMPLY WITH THE CODE, BUT IT IS NOT THE AUTHORITY TO VIOLATE ANY CODE ANY CODE OR ORDINANCE ALL WORK IS SUBJECT TO INSPECTION APPROVAL KEEP THESE PLANS AT THE JOBSITE

STATE OF MARYLAND — RONALD L. LITTEN — 7959-R — ARCHITECT

I CERTIFY THAT THESE DOCUMENTS WERE PREPARED OR APPROVED BY ME, AND THAT I AM A DULY LICENSED ARCHITECT UNDER THE LAWS OF THE STATE OF MARYLAND. LICENSE NUMBER 7959, EXPIRATION DATE DECEMBER 31, 2027"

Revisions

RENOVATION OF UNIVERSITY OF MARYLAND MEDICAL CENTER OFFICE BUILDING

616 CHARLES STREET
LA PLATA, MARYLAND 20646

COPYRIGHT R. LITTEN & ASSOCIATES, ARCHITECTS, LLC. NO PORTION OF THIS DRAWING MAY BE REPRODUCED, STORED OR TRANSMITTED BY ANY MEANS WITHOUT PRIOR WRITTEN PERMISSION FROM THE ARCHITECT.

R.L. LITTEN & ASSOCIATES, ARCHITECTS, LLC
300 CHARLES STREET,SUITE 4
P.O. BOX 1920, LAPLATA, MD 20646 (301) 934-1471

WDU
RL
3-27-26
25-41

301

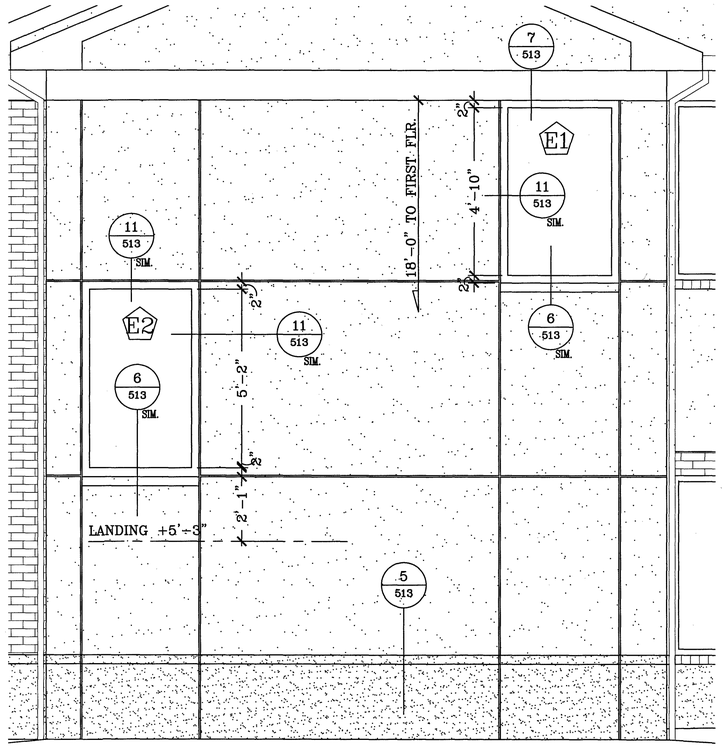

3 PARTIAL ELEVATION – STAIR

SCALE: 1/2 = 1'-0"

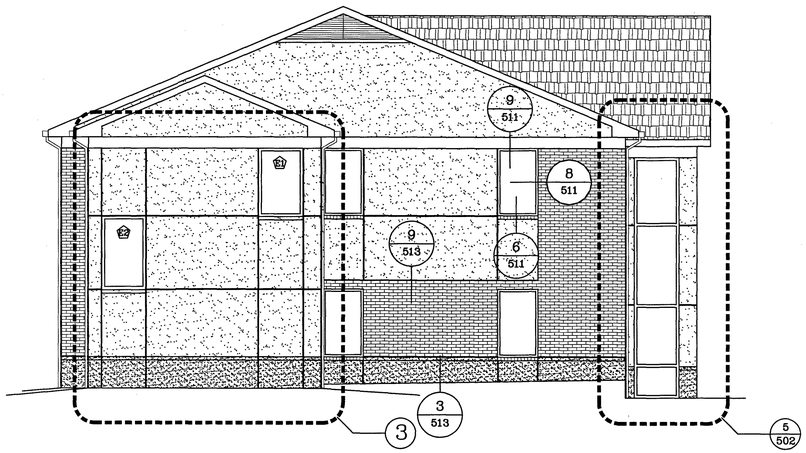

2 PROPOSED ELEVATION – LEFT SIDE

SCALE: 3/16" = 1'-0"

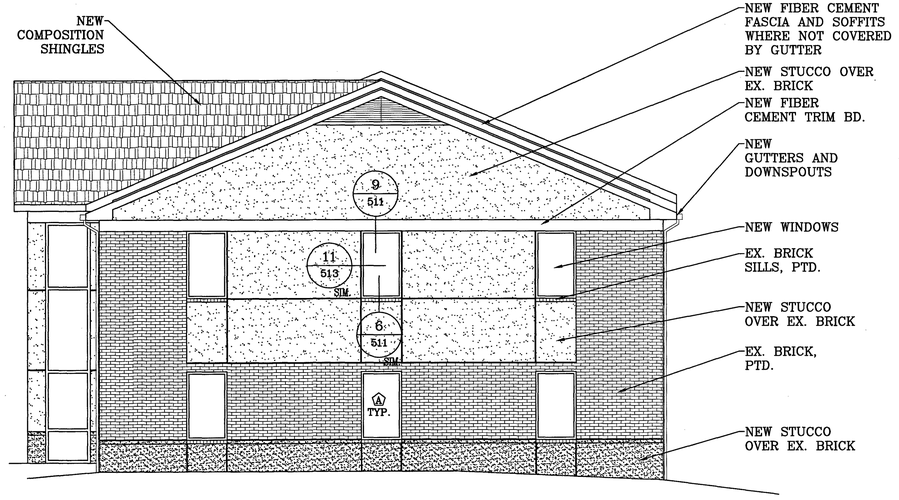

1 PROPOSED ELEVATION – RIGHT SIDE

SCALE: 3/16" = 1'-0"

TOWN OF LA PLATA
APPROVED FOR ISSUE
THIS PLAN APPEARS TO COMPLY WITH THE CODE, BUT IT IS NOT THE AUTHORITY TO VIOLATE ANY CODE ANY CODE OR ORDINANCE ALL WORK IS SUBJECT TO INSPECTION APPROVAL
KEEP THESE PLANS AT THE JOBSITE

STATE OF MARYLAND
RONALD L. LITTEN
7959-R
REGISTERED
ARCHITECT

Revisions

RENOVATION OF UNIVERSITY OF MARYLAND
MEDICAL CENTER OFFICE BUILDING

616 CHARLES STREET
LA PLATA, MARYLAND 20646

COPYRIGHT R.L.LITTEN & ASSOCIATES, ARCHITECTS, LLC. NO PORTION OF THIS DRAWING MAY BE REPRODUCED, STORED OR TRANSMITTED BY ANY MEANS WITHOUT PRIOR WRITTEN PERMISSION FROM THE ARCHITECT.

R.L. LITTEN & ASSOCIATES, ARCHITECTS, LLC
300 CHARLES STREET,SUITE 4
P.O. BOX 1920, LAPLATA, MD 20646 (301) 934-1471

WDU
RL
3-27-26
25-41

302

I CERTIFY THAT THESE DOCUMENTS WERE PREPARED OR APPROVED BY ME, AND THAT I AM A DULY LICENSED ARCHITECT UNDER THE LAWS OF THE STATE OF MARYLAND. LICENSE NUMBER 7959, EXPIRATION DATE DECEMBER 31, 2027"

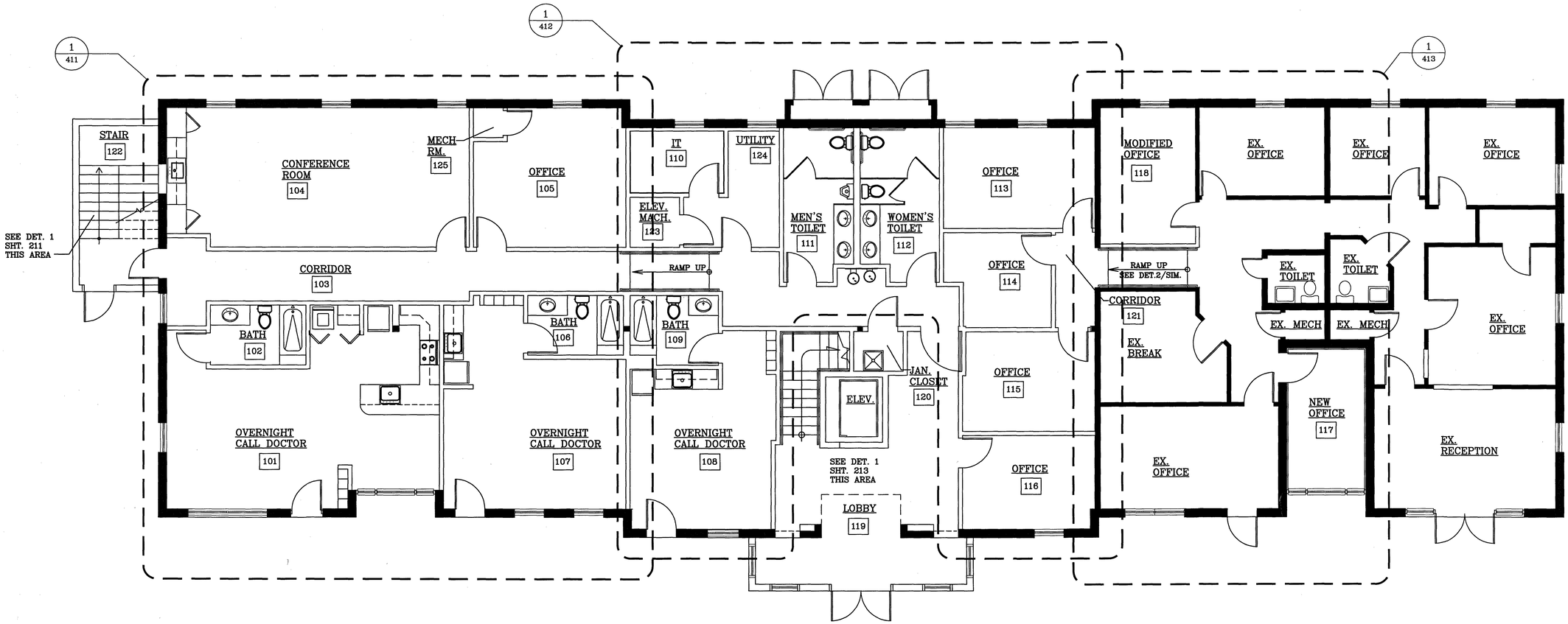

1 COMPOSITE FLOOR PLAN – FIRST FLR.

SCALE: 3/16" = 1'-0"

TOWN OF LA PLATA
APPROVED FOR ISSUE
THIS PLAN APPEARS TO COMPLY WITH THE CODE, BUT IT IS NOT THE AUTHORITY TO VIOLATE ANY CODE ANY CODE OR ORDINANCE
ALL WORK IS SUBJECT TO INSPECTION APPROVAL
KEEP THESE PLANS AT THE JOBSITE

STATE OF MARYLAND
RONALD L. LITTEN
7859-R
ARCHITECT

REVISIONS

RENOVATION OF UNIVERSITY OF MARYLAND MEDICAL CENTER OFFICE BUILDING

616 CHARLES STREET
LA PLATA, MARYLAND 20646

COPYRIGHT RL LITTEN & ASSOCIATES, ARCHITECTS, LLC. NO PORTION OF THIS DRAWING MAY BE REPRODUCED, STORED OR TRANSMITTED BY ANY MEANS WITHOUT PRIOR WRITTEN PERMISSION FROM THE ARCHITECT

R.L. LITTEN & ASSOCIATES, ARCHITECTS, LLC
300 CHARLES STREET, SUITE 4
P.O.BOX 1920, LAPLATA, MD 20646 (301) 934-1471
e-mail: rllitten.architect@verizon.net

I CERTIFY THAT THESE DOCUMENTS WERE PREPARED OR APPROVED BY ME, AND THAT I AM A DULY LICENSED ARCHITECT UNDER THE LAWS OF THE STATE OF MARYLAND. LICENSE NUMBER 7859, EXPIRATION DATE DECEMBER 31, 2027

KL
RL
3-27-26
25-41

401

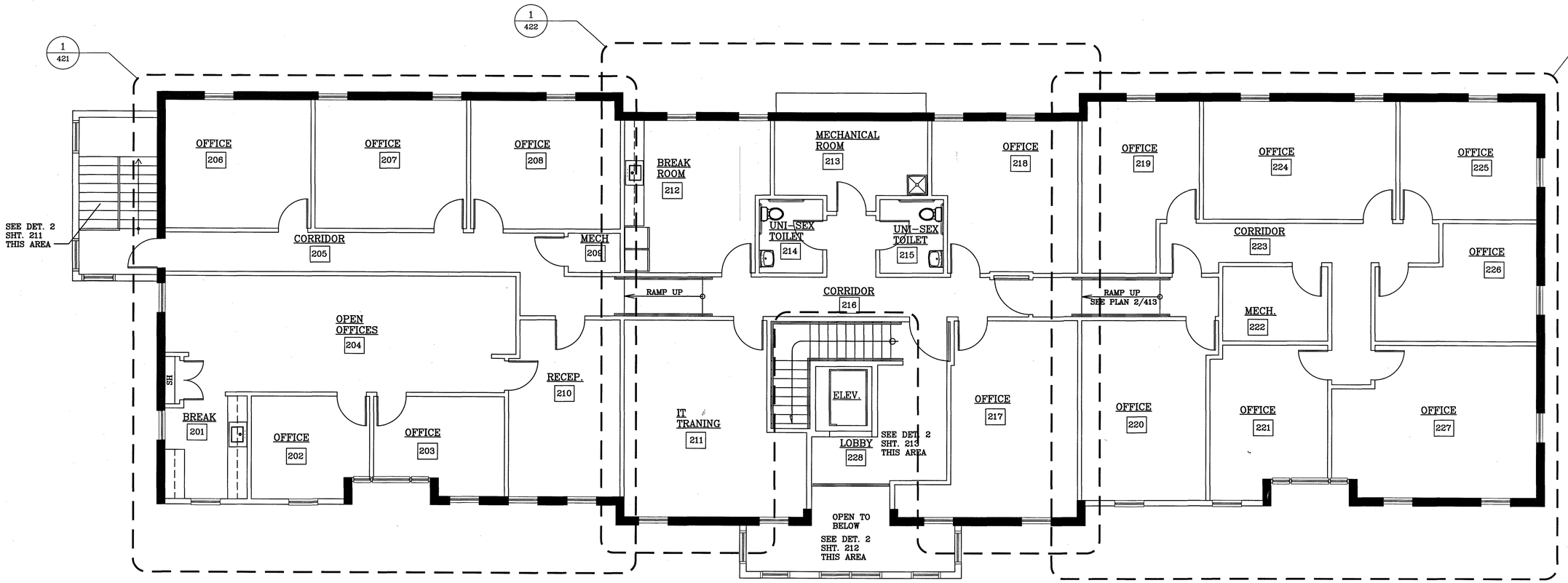

1 COMPOSITE FLOOR PLAN – SECOND FLR.
SCALE: 3/16" = 1'-0"

TOWN OF LA PLATA
APPROVED FOR ISSUE
THIS PLAN APPEARS TO COMPLY WITH THE CODE, BUT IT IS NOT THE AUTHORITY TO VIOLATE ANY CODE ANY CODE OR ORDINANCE. ALL WORK IS SUBJECT TO INSPECTION APPROVAL
KEEP THESE PLANS AT THE JOBSITE

STATE OF MARYLAND · RONALD L. LITTEN · 7959-R · ARCHITECT

I CERTIFY THAT THESE DOCUMENTS WERE PREPARED OR APPROVED BY ME, AND THAT I AM A DULY LICENSED ARCHITECT UNDER THE LAWS OF THE STATE OF MARYLAND. LICENSE NUMBER 7959, EXPIRATION DATE DECEMBER 31, 2027"

REVISIONS

RENOVATION OF UNIVERSITY OF MARYLAND MEDICAL CENTER OFFICE BUILDING

616 CHARLES STREET
LA PLATA, MARYLAND 20646

COPYRIGHT R. LITTEN & ASSOCIATES, ARCHITECTS, LLC. NO PORTION OF THIS DRAWING MAY BE REPRODUCED, STORED OR TRANSMITTED BY ANY MEANS WITHOUT PRIOR WRITTEN PERMISSION FROM THE ARCHITECT.

R.L. LITTEN & ASSOCIATES, ARCHITECTS, LLC
300 CHARLES STREET, SUITE 4
P.O.BOX 1920, LAPLATA, MD 20646 (301) 934-1471
e-mail: rllitten.architect@verizon.net

KL
RL
3-27-26
25-41

402

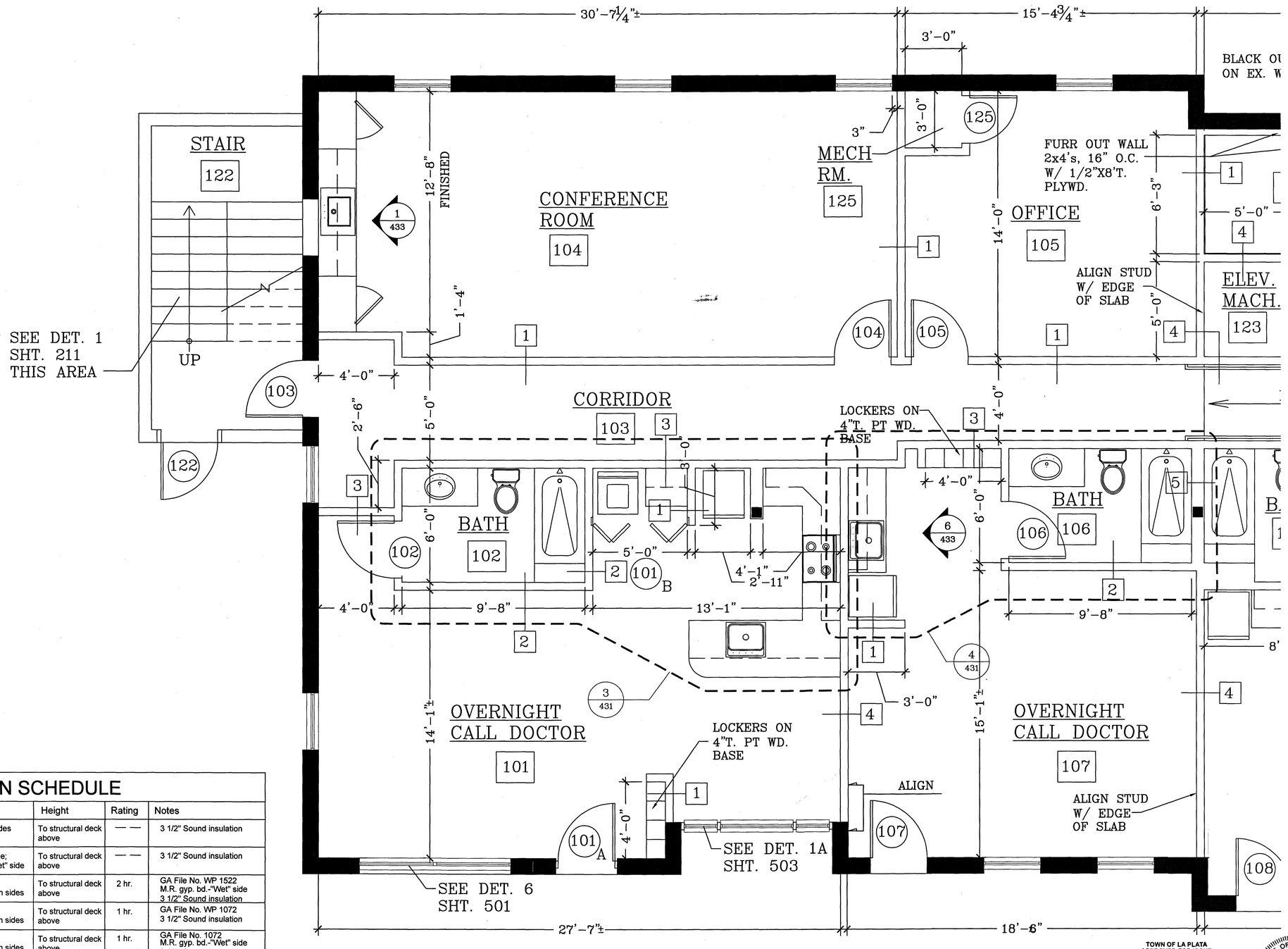

1 PARTIAL FLOOR PLAN – FIRST FLR.

SCALE: 3/8" = 1'-0"

PARTITION SCHEDULE

	Studding	Finish	Height	Rating	Notes
1	3 5/8" MTL., 16" O.C.	1/2" Gyp. board-both sides	To structural deck above	— —	3 1/2" Sound insulation
2	3 5/8" MTL., 16" O.C.	1/2" Gyp. board-one side; 1/2" MR Gyp. board-"wet" side	To structural deck above	— —	3 1/2" Sound insulation
3	3 5/8" MTL., 16" O.C.	2-Layers 5/8" FR Gyp. board-both sides	To structural deck above	2 hr.	GA File No. WP 1522 M.R. gyp. bd.-"Wet" side 3 1/2" Sound insulation
4	3 5/8" MTL., 16" O.C.	1-Layer 5/8" FR Gyp. board-both sides	To structural deck above	1 hr.	GA File No. WP 1072 3 1/2" Sound insulation
5	6" MTL., 16" O.C.	1-Layer 5/8" FR Gyp. board-both sides	To structural deck above	1 hr.	GA File No. 1072 M.R. gyp. bd.-"Wet" side 3 1/2" Sound insulation
6	2x6 WD. STUDS, 16" O.C.	1-Layer 5/8" FR Gyp. board-both sides	To roof top of shaft	1 hr.	

NOTE: ALL METAL STUDS ARE 25 GA. UNO.

TOWN OF LA PLATA
APPROVED FOR ISSUE
THIS PLAN APPEARS TO COMPLY WITH THE CODE, BUT IT IS NOT THE AUTHORITY TO VIOLATE ANY CODE OR ORDINANCE. ALL WORK IS SUBJECT TO INSPECTION APPROVAL
KEEP THESE PLANS AT THE JOBSITE

STATE OF MARYLAND · DONALD L. LITTEN · 7959-R · REGISTERED ARCHITECT

REVISIONS

RENOVATION OF UNIVERSITY OF MARYLAND MEDICAL CENTER OFFICE BUILDING
616 CHARLES STREET
LA PLATA, MARYLAND 20646

COPYRIGHT R. LITTEN & ASSOCIATES, ARCHITECTS, LLC. NO PORTION OF THIS DRAWING MAY BE REPRODUCED, STORED OR TRANSMITTED BY ANY MEANS WITHOUT PRIOR WRITTEN PERMISSION FROM THE ARCHITECT.

R.L. LITTEN & ASSOCIATES, ARCHITECTS, LLC
300 CHARLES STREET, SUITE 4
P.O.BOX 1920, LAPLATA, MD 20646 (301) 934-1471
e-mail: rllitten.architect@verizon.net

KL
RL
3-27-26
25-41

411

I CERTIFY THAT THESE DOCUMENTS WERE PREPARED OR APPROVED BY ME, AND THAT I AM A DULY LICENSED ARCHITECT UNDER THE LAWS OF THE STATE OF MARYLAND. LICENSE NUMBER 7959, EXPIRATION DATE DECEMBER 31, 2027"

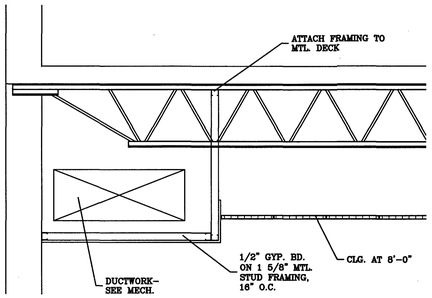

2 BULKHEAD DETAIL

SCALE: 3/4" = 1'-0"

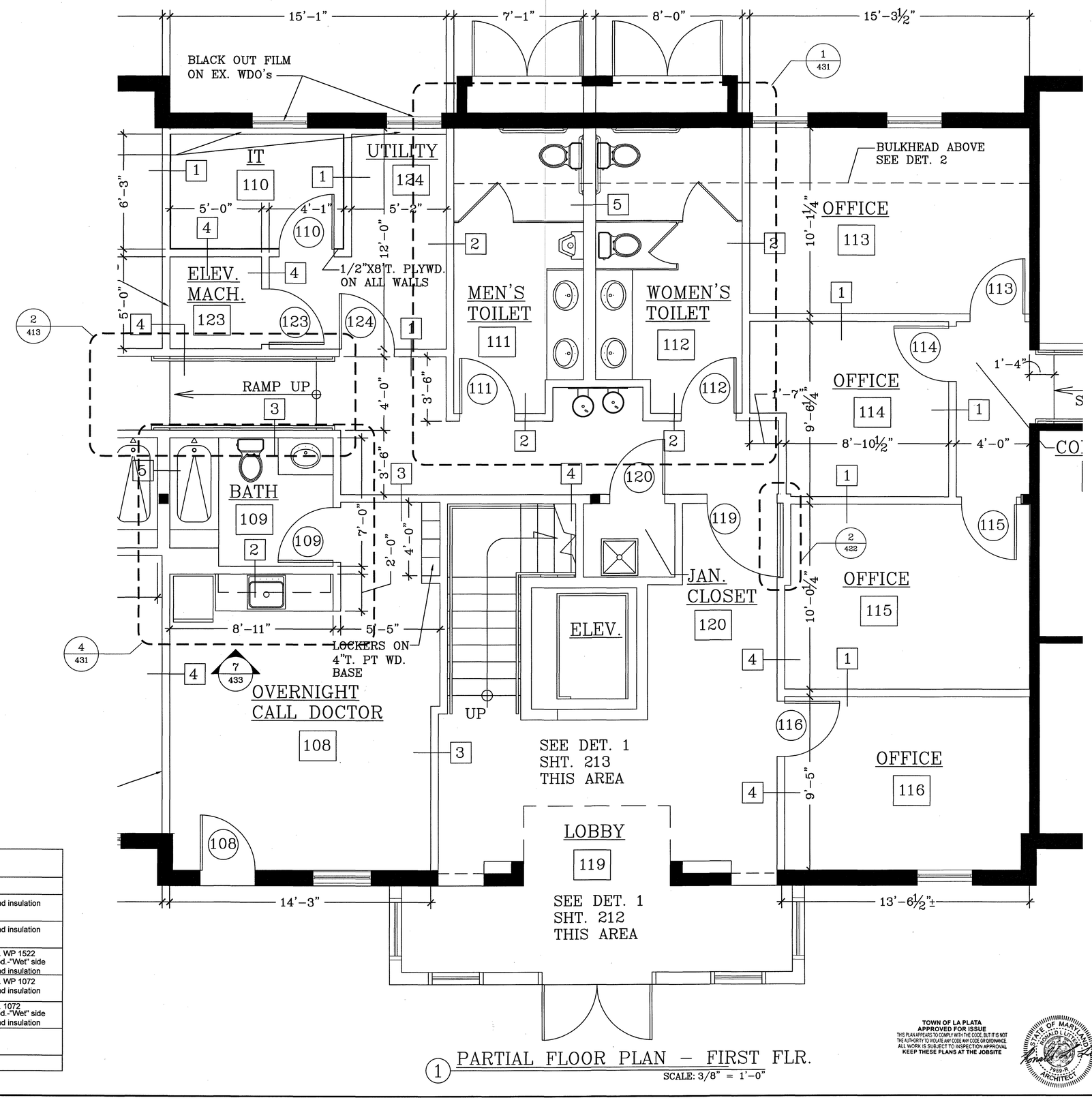

1 PARTIAL FLOOR PLAN – FIRST FLR.

SCALE: 3/8" = 1'-0"

PARTITION SCHEDULE

☐	Studding	Finish	Height	Rating	Notes
1	3 5/8" MTL., 16" O.C.	1/2" Gyp. board-both sides	To structural deck above	— —	3 1/2" Sound insulation
2	3 5/8" MTL., 16" O.C.	1/2" Gyp. board-one side; 1/2" MR Gyp. board-"wet" side	To structural deck above	— —	3 1/2" Sound insulation
3	3 5/8" MTL., 16" O.C.	2-Layers 5/8" FR Gyp. board-both sides	To structural deck above	2 hr.	GA File No. WP 1522 M.R. gyp. bd.-"Wet" side 3 1/2" Sound insulation
4	3 5/8" MTL., 16" O.C.	1-Layer 5/8" FR Gyp. board-both sides	To structural deck above	1 hr.	GA File No. WP 1072 3 1/2" Sound insulation
5	6" MTL., 16" O.C.	1-Layer 5/8" FR Gyp. board-both sides	To structural deck above	1 hr.	GA File No. 1072 M.R. gyp. bd.-"Wet" side 3 1/2" Sound insulation
6	2x6 WD. STUDS, 16" O.C.	1-Layer 5/8" FR Gyp. board-both sides	To roof top of shaft	1 hr.	

NOTE: ALL METAL STUDS ARE 25 GA. UNO.

TOWN OF LA PLATA
APPROVED FOR ISSUE
THIS PLAN APPEARS TO COMPLY WITH THE CODE, BUT IT IS NOT THE AUTHORITY TO VIOLATE ANY CODE ANY CODE OR ORDINANCE. ALL WORK IS SUBJECT TO INSPECTION APPROVAL
KEEP THESE PLANS AT THE JOBSITE

STATE OF MARYLAND
RONALD L. LITTEN
7959-R
ARCHITECT

REVISIONS

RENOVATION OF UNIVERSITY OF MARYLAND
MEDICAL CENTER OFFICE BUILDING
616 CHARLES STREET
LA PLATA, MARYLAND 20646

COPYRIGHT R.L. LITTEN & ASSOCIATES, ARCHITECTS, LLC. NO PORTION OF THIS DRAWING MAY BE REPRODUCED, STORED OR TRANSMITTED BY ANY MEANS WITHOUT PRIOR WRITTEN PERMISSION FROM THE ARCHITECT.

R.L. LITTEN & ASSOCIATES, ARCHITECTS, LLC
300 CHARLES STREET, SUITE 4
P.O.BOX 1920, LAPLATA, MD 20646 (301) 934-1471
e-mail: rllitten.architect@verizon.net

KL
RL
3-27-26
25-41

412

I CERTIFY THAT THESE DOCUMENTS WERE PREPARED OR APPROVED BY ME, AND THAT I AM A DULY LICENSED ARCHITECT UNDER THE LAWS OF THE STATE OF MARYLAND. LICENSE NUMBER 7959, EXPIRATION DATE DECEMBER 31, 2027

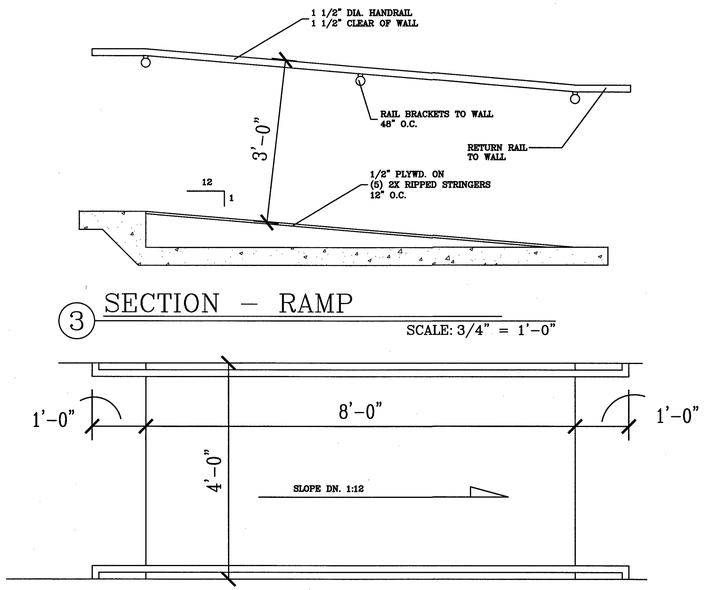

3 SECTION – RAMP

SCALE: 3/4" = 1'-0"

2 PARTIAL FLOOR PLAN – RAMP

SCALE: 3/4" = 1'-0"

1 PARTIAL FLOOR PLAN – FIRST FLR.

SCALE: 3/8" = 1'-0"

PARTITION SCHEDULE

	Studding	Finish	Height	Rating	Notes
1	3 5/8" MTL., 16" O.C.	1/2" Gyp. board-both sides	To structural deck above	— —	3 1/2" Sound insulation
2	3 5/8" MTL., 16" O.C.	1/2" Gyp. board-one side; 1/2" MR Gyp. board-"wet" side	To structural deck above	— —	3 1/2" Sound insulation
3	3 5/8" MTL., 16" O.C.	2-Layers 5/8" FR Gyp. board-both sides	To structural deck above	2 hr.	GA File No. WP 1522 M.R. gyp. bd.-"Wet" side 3 1/2" Sound insulation
4	3 5/8" MTL., 16" O.C.	1-Layer 5/8" FR Gyp. board-both sides	To structural deck above	1 hr.	GA File No. WP 1072 3 1/2" Sound insulation
5	6" MTL., 16" O.C.	1-Layer 5/8" FR Gyp. board-both sides	To structural deck above	1 hr.	GA File No. 1072 M.R. gyp. bd.-"Wet" side 3 1/2" Sound insulation
6	2x6 WD. STUDS, 16" O.C.	1-Layer 5/8" FR Gyp. board-both sides	To roof top of shaft	1 hr.	

NOTE: ALL METAL STUDS ARE 25 GA. UNO.

TOWN OF LA PLATA
APPROVED FOR ISSUE
THIS PLAN APPEARS TO COMPLY WITH THE CODE, BUT IT IS NOT THE AUTHORITY TO VIOLATE ANY CODE ANY CODE OR ORDINANCE. ALL WORK IS SUBJECT TO INSPECTION APPROVAL
KEEP THESE PLANS AT THE JOBSITE

STATE OF MARYLAND
RONALD L. LITTEN
7959-R
ARCHITECT

REVISIONS

RENOVATION OF UNIVERSITY OF MARYLAND
MEDICAL CENTER OFFICE BUILDING
616 CHARLES STREET
LA PLATA, MARYLAND 20646

COPYRIGHT R. LITTEN & ASSOCIATES, ARCHITECTS, LLC. NO PORTION OF THIS DRAWING MAY BE REPRODUCED, STORED OR TRANSMITTED BY ANY MEANS WITHOUT PRIOR WRITTEN PERMISSION FROM THE ARCHITECT.

I CERTIFY THAT THESE DOCUMENTS WERE PREPARED OR APPROVED BY ME, AND THAT I AM A DULY LICENSED ARCHITECT UNDER THE LAWS OF THE STATE OF MARYLAND. LICENSE NUMBER 7959, EXPIRATION DATE DECEMBER 31, 2027"

R.L. LITTEN & ASSOCIATES, ARCHITECTS, LLC
300 CHARLES STREET, SUITE 4
P.O.BOX 1920, LAPLATA, MD 20646 (301) 934-1471
e-mail: rllitten.architect@verizon.net

KL
RL
3-27-26
25-41

413

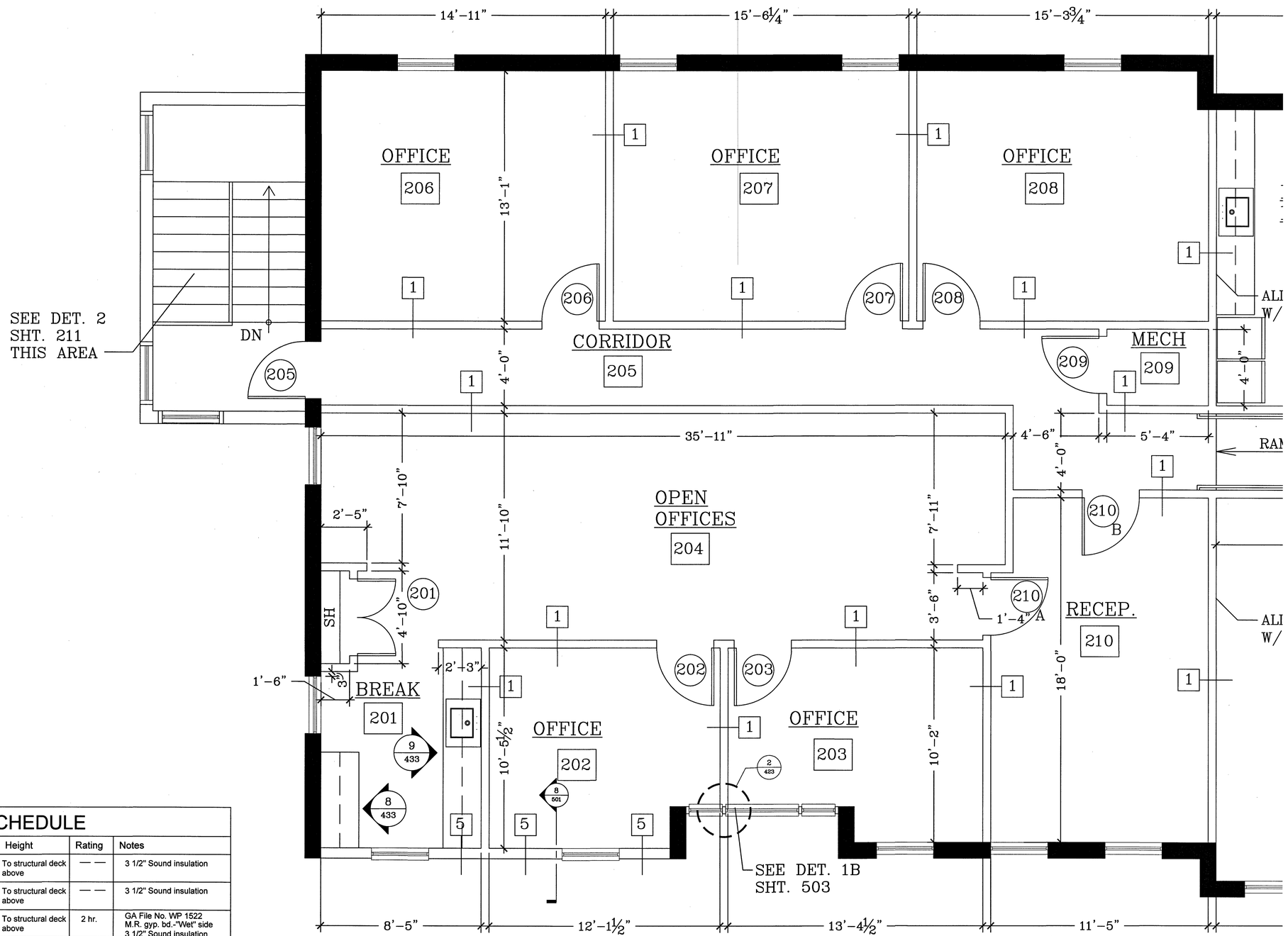

1 PARTIAL FLOOR PLAN – SECOND FLR.

SCALE: 3/8" = 1'-0"

PARTITION SCHEDULE

	Studding	Finish	Height	Rating	Notes
1	3 5/8" MTL., 16" O.C.	1/2" Gyp. board-both sides	To structural deck above	— —	3 1/2" Sound insulation
2	3 5/8" MTL., 16" O.C.	1/2" Gyp. board-one side; 1/2" MR Gyp. board-"wet" side	To structural deck above	— —	3 1/2" Sound insulation
3	3 5/8" MTL., 16" O.C.	2-Layers 5/8" FR Gyp. board-both sides	To structural deck above	2 hr.	GA File No. WP 1522 M.R. gyp. bd.-"Wet" side 3 1/2" Sound insulation
4	3 5/8" MTL., 16" O.C.	1-Layer 5/8" FR Gyp. board-both sides	To structural deck above	1 hr.	GA File No. WP 1072 3 1/2" Sound insulation
5	6" MTL., 16" O.C.	1-Layer 5/8" FR Gyp. board-both sides	To structural deck above	1 hr.	GA File No. 1072 M.R. gyp. bd.-"Wet" side 3 1/2" Sound insulation
6	2x6 WD. STUDS, 16" O.C.	1-Layer 5/8" FR Gyp. board-both sides	To roof top of shaft	1 hr.	

NOTE: ALL METAL STUDS ARE 25 GA. UNO.

TOWN OF LA PLATA
APPROVED FOR ISSUE
THIS PLAN APPEARS TO COMPLY WITH THE CODE, BUT IT IS NOT THE AUTHORITY TO VIOLATE ANY CODE ANY CODE OR ORDINANCE
ALL WORK IS SUBJECT TO INSPECTION APPROVAL
KEEP THESE PLANS AT THE JOBSITE

I CERTIFY THAT THESE DOCUMENTS WERE PREPARED OR APPROVED BY ME, AND THAT I AM A DULY LICENSED ARCHITECT UNDER THE LAWS OF THE STATE OF MARYLAND. LICENSE NUMBER 7959, EXPIRATION DATE DECEMBER 31, 2027

REVISIONS

RENOVATION OF UNIVERSITY OF MARYLAND
MEDICAL CENTER OFFICE BUILDING
616 CHARLES STREET
LA PLATA, MARYLAND 20646

COPYRIGHT R. LITTEN & ASSOCIATES, ARCHITECTS, LLC. NO PORTION OF THIS DRAWING MAY BE REPRODUCED, STORED OR TRANSMITTED BY ANY MEANS WITHOUT PRIOR WRITTEN PERMISSION FROM THE ARCHITECT.

R.L. LITTEN & ASSOCIATES, ARCHITECTS, LLC
300 CHARLES STREET, SUITE 4
P.O.BOX 1920, LAPLATA, MD 20646 (301) 934-1471
e-mail: rllitten.architect@verizon.net

KL
RL
3-27-26
25-41

421

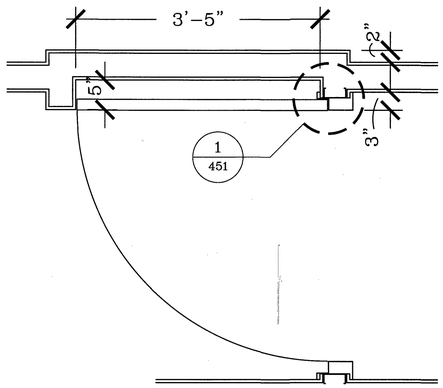

3 WALL DETAIL

SCALE: 1" = 1'-0"

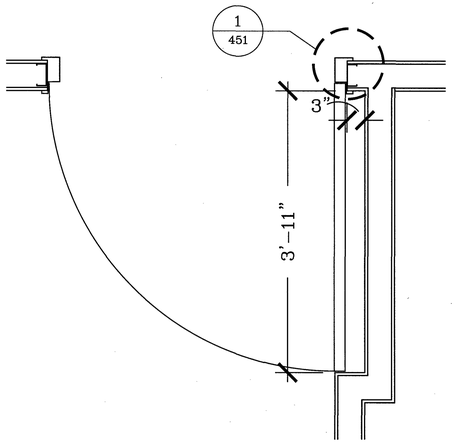

2 WALL DETAIL

SCALE: 1" = 1'-0"

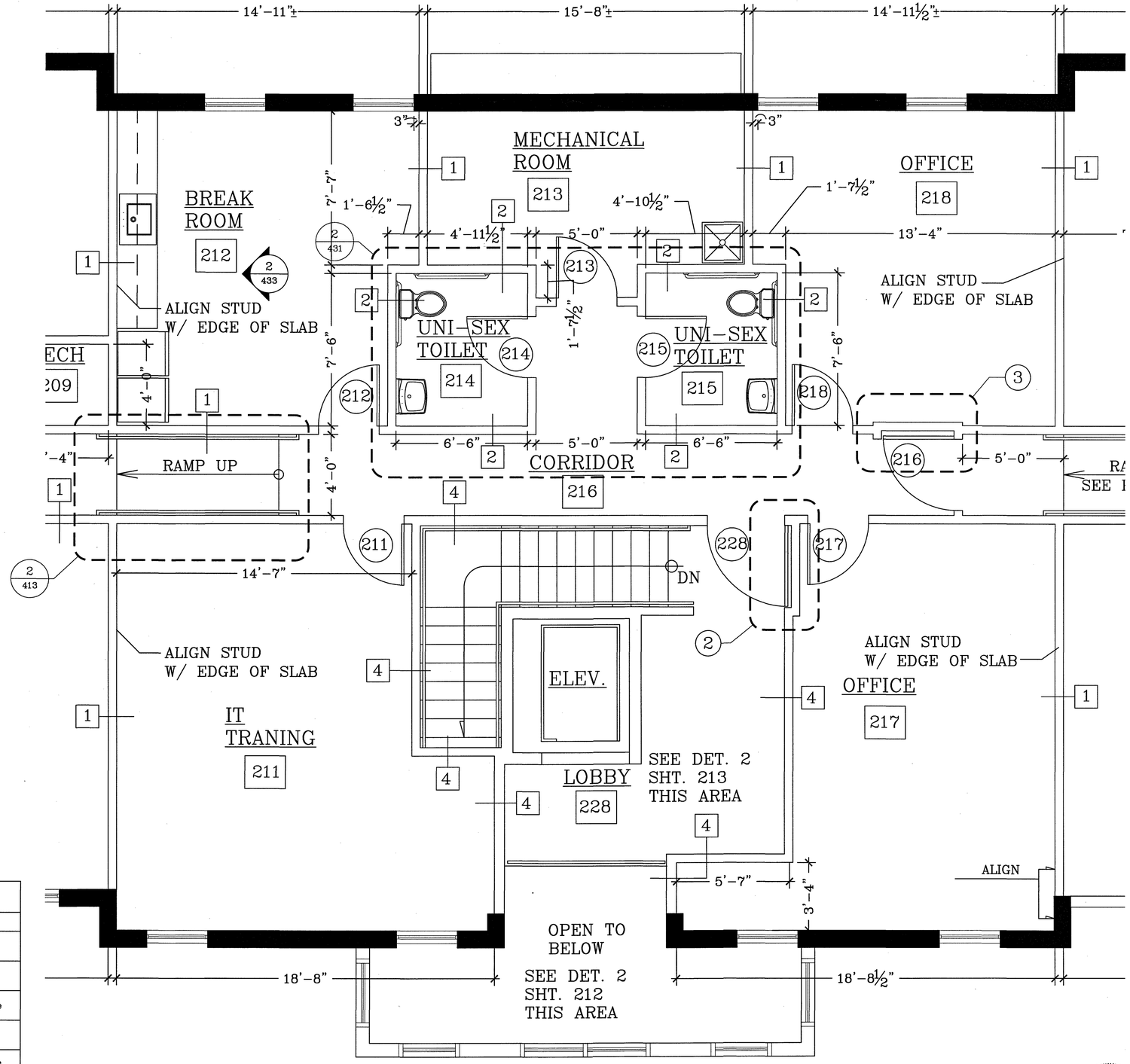

1 PARTIAL FLOOR PLAN – SECOND FLR.

SCALE: 3/8" = 1'-0"

PARTITION SCHEDULE

	Studding	Finish	Height	Rating	Notes
1	3 5/8" MTL., 16" O.C.	1/2" Gyp. board-both sides	To structural deck above	— —	3 1/2" Sound insulation
2	3 5/8" MTL., 16" O.C.	1/2" Gyp. board-one side; 1/2" MR Gyp. board-"wet" side	To structural deck above	— —	3 1/2" Sound insulation
3	3 5/8" MTL., 16" O.C.	2-Layers 5/8" FR Gyp. board-both sides	To structural deck above	2 hr.	GA File No. WP 1522 M.R. gyp. bd.-"Wet" side 3 1/2" Sound insulation
4	3 5/8" MTL., 16" O.C.	1-Layer 5/8" FR Gyp. board-both sides	To structural deck above	1 hr.	GA File No. WP 1072 3 1/2" Sound insulation
5	6" MTL., 16" O.C.	1-Layer 5/8" FR Gyp. board-both sides	To structural deck above	1 hr.	GA File No. 1072 M.R. gyp. bd.-"Wet" side 3 1/2" Sound insulation
6	2x6 WD. STUDS, 16" O.C.	1-Layer 5/8" FR Gyp. board-both sides	To roof top of shaft	1 hr.	

NOTE: ALL METAL STUDS ARE 25 GA. UNO.

TOWN OF LA PLATA
APPROVED FOR ISSUE
THIS PLAN APPEARS TO COMPLY WITH THE CODE, BUT IT IS NOT THE AUTHORITY TO VIOLATE ANY CODE ANY CODE OR ORDINANCE.
ALL WORK IS SUBJECT TO INSPECTION APPROVAL
KEEP THESE PLANS AT THE JOBSITE

STATE OF MARYLAND · RONALD L. LITTEN · 7959 · ARCHITECT

REVISIONS

RENOVATION OF UNIVERSITY OF MARYLAND
MEDICAL CENTER OFFICE BUILDING
616 CHARLES STREET
LA PLATA, MARYLAND 20646

COPYRIGHT BY LITTEN & ASSOCIATES, ARCHITECTS, LLC. NO PORTION OF THIS DRAWING MAY BE REPRODUCED, STORED OR TRANSMITTED BY ANY MEANS WITHOUT PRIOR WRITTEN PERMISSION FROM THE ARCHITECT.

R.L. LITTEN & ASSOCIATES, ARCHITECTS, LLC
300 CHARLES STREET, SUITE 4
P.O.BOX 1920, LAPLATA, MD 20646 (301) 934-1471
e-mail: rllitten.architect@verizon.net

"I CERTIFY THAT THESE DOCUMENTS WERE PREPARED OR APPROVED BY ME, AND THAT I AM A DULY LICENSED ARCHITECT UNDER THE LAWS OF THE STATE OF MARYLAND. LICENSE NUMBER 7959, EXPIRATION DATE DECEMBER 31, 2027"

KL
RL
3-27-26
25-41

422

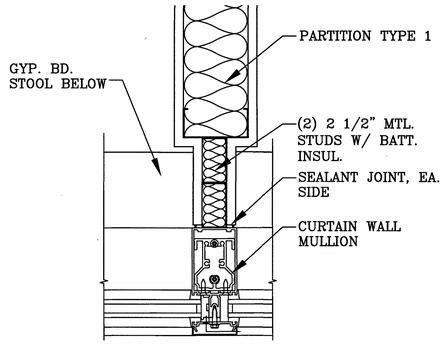

2 WALL DETAIL

SCALE: 3" = 1'-0"

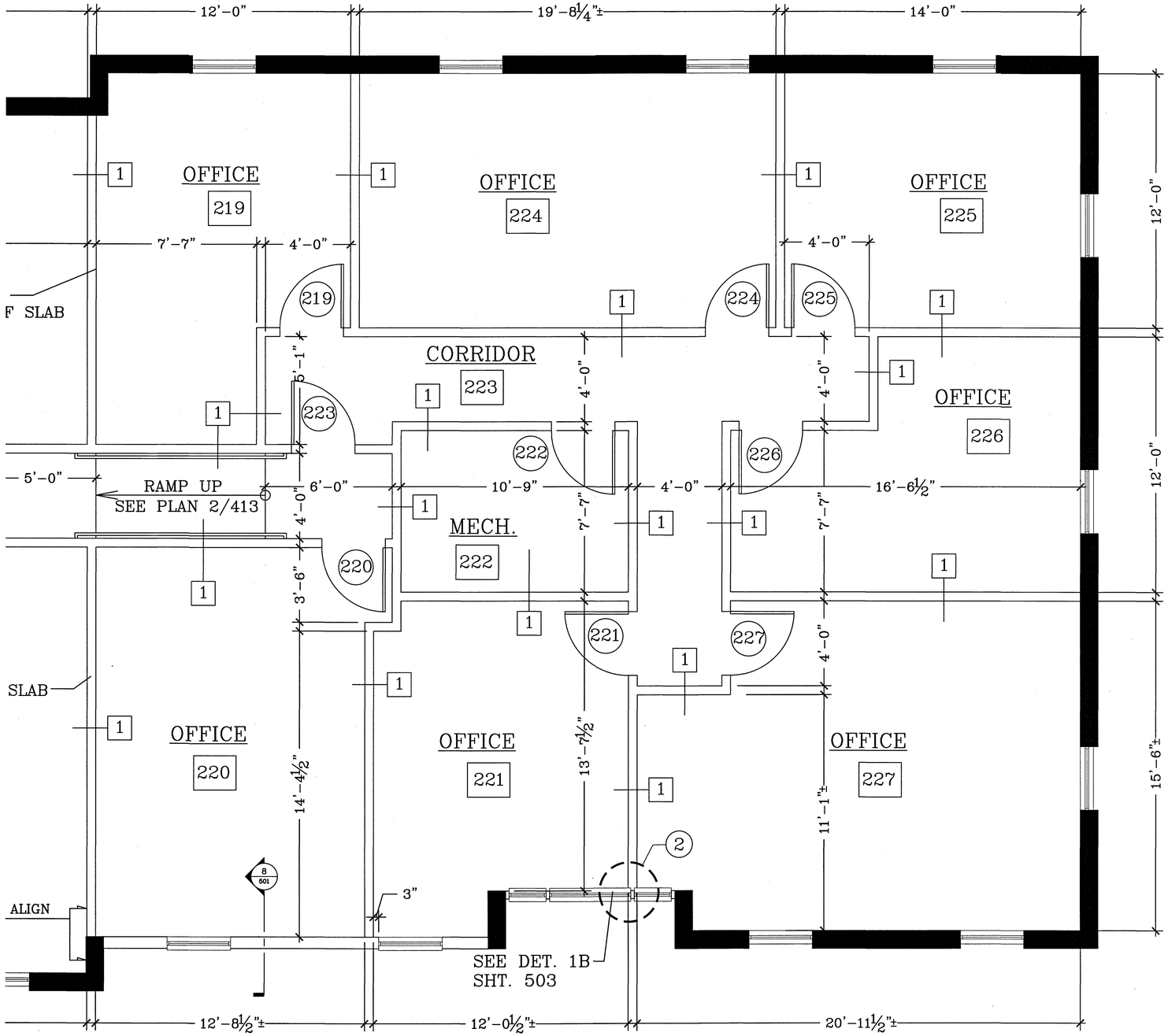

1 PARTIAL FLOOR PLAN – SECOND FLR.

SCALE: 3/8" = 1'-0"

PARTITION SCHEDULE

	Studding	Finish	Height	Rating	Notes
1	3 5/8" MTL., 16" O.C.	1/2" Gyp. board-both sides	To structural deck above	— —	3 1/2" Sound insulation
2	3 5/8" MTL., 16" O.C.	1/2" Gyp. board-one side; 1/2" MR Gyp. board-"wet" side	To structural deck above	— —	3 1/2" Sound insulation
3	3 5/8" MTL., 16" O.C.	2-Layers 5/8" FR Gyp. board-both sides	To structural deck above	2 hr.	GA File No. WP 1522 M.R. gyp. bd.-"Wet" side 3 1/2" Sound insulation
4	3 5/8" MTL., 16" O.C.	1-Layer 5/8" FR Gyp. board-both sides	To structural deck above	1 hr.	GA File No. WP 1072 3 1/2" Sound insulation
5	6" MTL., 16" O.C.	1-Layer 5/8" FR Gyp. board-both sides	To structural deck above	1 hr.	GA File No. 1072 M.R. gyp. bd.-"Wet" side 3 1/2" Sound insulation
6	2x6 WD. STUDS, 16" O.C.	1-Layer 5/8" FR Gyp. board-both sides	To roof top of shaft	1 hr.	

NOTE: ALL METAL STUDS ARE 25 GA. UNO.

TOWN OF LA PLATA
APPROVED FOR ISSUE
THIS PLAN APPEARS TO COMPLY WITH THE CODE, BUT IT IS NOT THE AUTHORITY TO VIOLATE ANY CODE ANY CODE OR ORDINANCE. ALL WORK IS SUBJECT TO INSPECTION APPROVAL
KEEP THESE PLANS AT THE JOBSITE

STATE OF MARYLAND · RONALD L. LITTEN · 7959 · ARCHITECT

REVISIONS

RENOVATION OF UNIVERSITY OF MARYLAND
MEDICAL CENTER OFFICE BUILDING
616 CHARLES STREET
LA PLATA, MARYLAND 20646

COPYRIGHT © LITTEN & ASSOCIATES, ARCHITECTS, LLC. NO PORTION OF THIS DRAWING MAY BE REPRODUCED, STORED OR TRANSMITTED BY ANY MEANS WITHOUT PRIOR WRITTEN PERMISSION FROM THE ARCHITECT.

R.L. LITTEN & ASSOCIATES, ARCHITECTS, LLC
300 CHARLES STREET, SUITE 4
P.O.BOX 1920, LAPLATA, MD 20646 (301) 934-1471
e-mail: rllitten.architect@verizon.net

KL
RL
3-27-26
25-41

423

I CERTIFY THAT THESE DOCUMENTS WERE PREPARED OR APPROVED BY ME, AND THAT I AM A DULY LICENSED ARCHITECT UNDER THE LAWS OF THE STATE OF MARYLAND. LICENSE NUMBER 7959, EXPIRATION DATE DECEMBER 31, 2027"

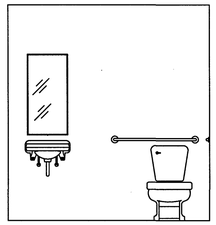

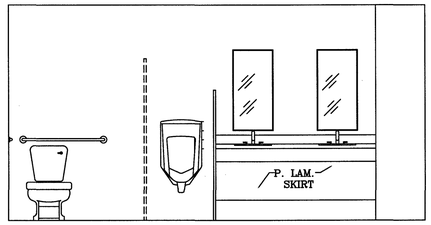

6 INTERIOR ELEVATION
SCALE: 3/8" = 1'-0"

5 INTERIOR ELEVATION
SCALE: 3/8" = 1'-0"

ACCESSORY SCHEDULE			
◯	Description	Model No.	Notes
A	36" Grab bar	B-6806.99	
B	42" Grab bar	B-6806.99	
C	Toilet paper dispenser	B-264	
D	Soap dispenser	B-2112	
E	Hook	B-211	
F	Paper towel dispenser/waste recp.	B-369	
G	Mirror 18"W. x 36"T.	B-165 1836	

ALL MODEL NUMBERS STARTING WITH (B) REFER TO BOBRICK.

ACCESSORY SCHEDULE			
◯	Description	Model No.	Notes
A	Shower curtain rod		
B	Toilet paper holder		
C	Towel bar		
D	Vanity mirror		
E	Hook		

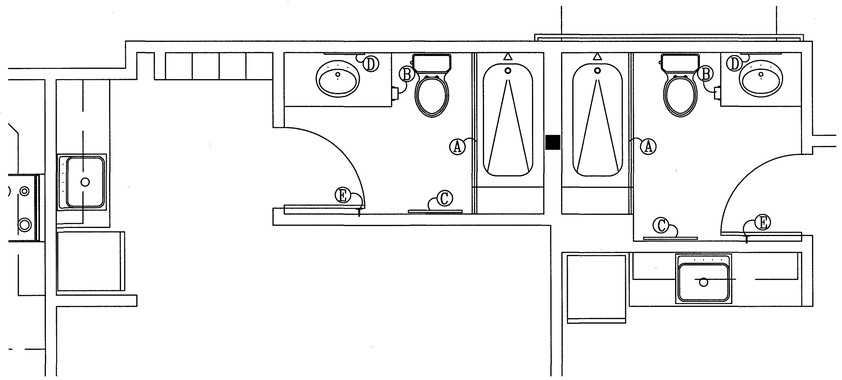

4 PARTIAL FLOOR PLAN – ROOM 107/108
SCALE: 3/8" = 1'-0"

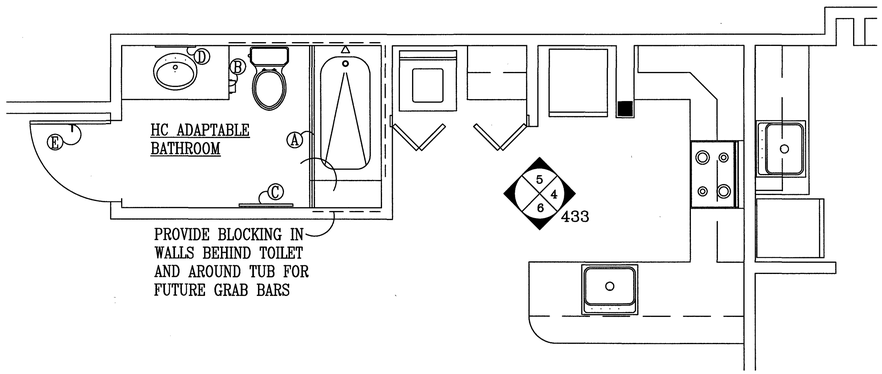

3 PARTIAL FLOOR PLAN – ROOM 101
SCALE: 3/8" = 1'-0"

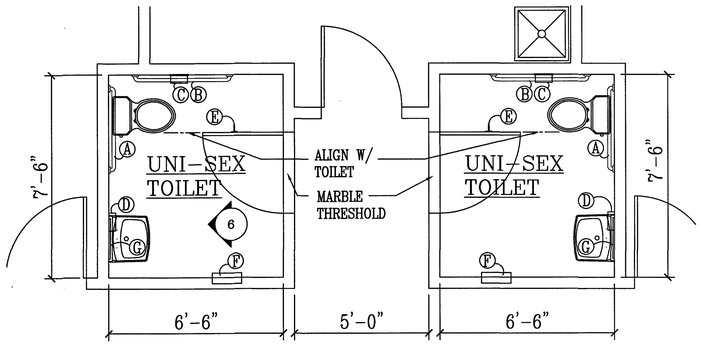

2 PARTIAL FLOOR PLAN – SECOND FLR.
SCALE: 3/8" = 1'-0"

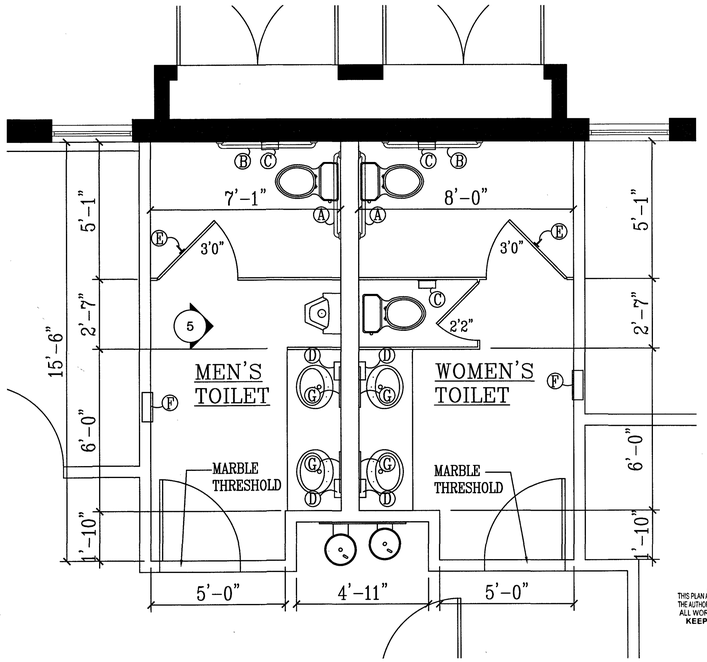

1 PARTIAL FLOOR PLAN – FIRST FLR.
SCALE: 3/8" = 1'-0"

TOWN OF LA PLATA
APPROVED FOR ISSUE
THIS PLAN APPEARS TO COMPLY WITH THE CODE, BUT IT IS NOT THE AUTHORITY TO VIOLATE ANY CODE ANY CODE OR ORDINANCE
ALL WORK IS SUBJECT TO INSPECTION APPROVAL
KEEP THESE PLANS AT THE JOBSITE

"I CERTIFY THAT THESE DOCUMENTS WERE PREPARED OR APPROVED BY ME, AND THAT I AM A DULY LICENSED ARCHITECT UNDER THE LAWS OF THE STATE OF MARYLAND. LICENSE NUMBER 7959, EXPIRATION DATE DECEMBER 31, 2027"

REVISIONS

RENOVATION OF UNIVERSITY OF MARYLAND
MEDICAL CENTER OFFICE BUILDING
616 CHARLES STREET
LA PLATA, MARYLAND 20646

COPYRIGHT R. LITTEN & ASSOCIATES, ARCHITECTS, LLC. NO PORTION OF THIS DRAWING MAY BE REPRODUCED, STORED OR TRANSMITTED BY ANY MEANS WITHOUT PRIOR WRITTEN PERMISSION FROM THE ARCHITECT.

R.L. LITTEN & ASSOCIATES, ARCHITECTS, LLC
300 CHARLES STREET, SUITE 4
P.O.BOX 1920, LAPLATA, MD 20646 (301) 934-1471
e-mail: rllitten.architect@verizon.net

KL
RL
3-27-26
25-41

431

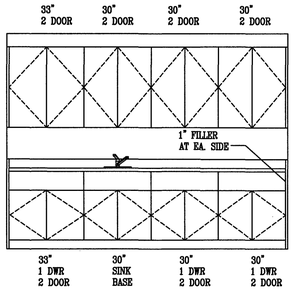

9 INTERIOR ELEVATION–ROOM 201
3/8"=1'–0"

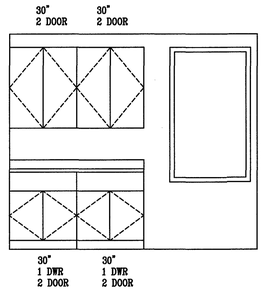

8 INTERIOR ELEVATION–ROOM 201
3/8"=1'–0"

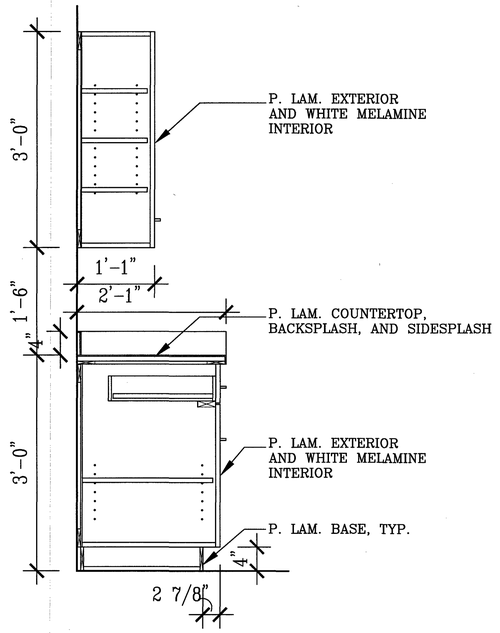

10 SECTION–TYPICAL CABINET
1"=1'–0"

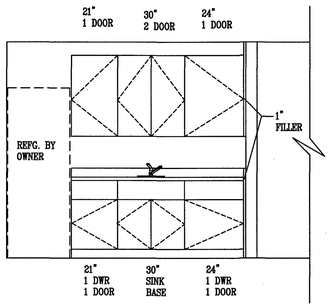

7 INTERIOR ELEVATION–ROOM 108
3/8"=1'–0"

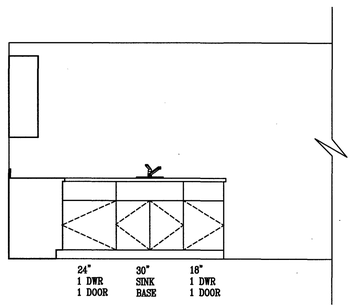

6 INTERIOR ELEVATION–ROOM 101
3/8"=1'–0"

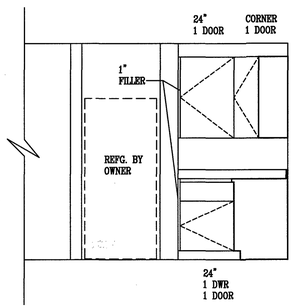

5 INTERIOR ELEVATION–ROOM 101
3/8"=1'–0"

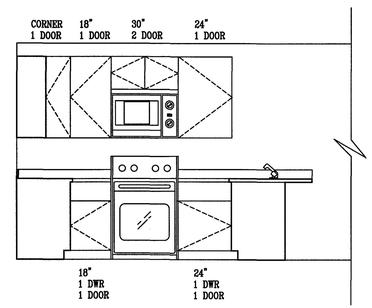

4 INTERIOR ELEVATION–ROOM 101
3/8"=1'–0"

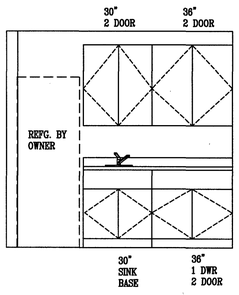

3 INTERIOR ELEVATION–ROOM 107
3/8"=1'–0"

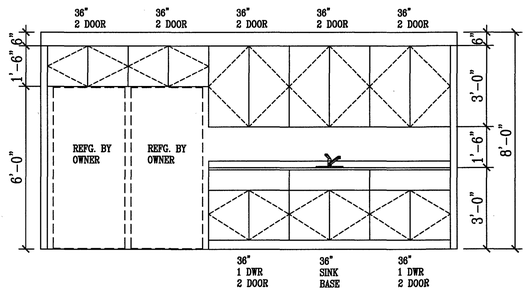

2 INTERIOR ELEVATION–BREAK RM.
3/8"=1'–0"

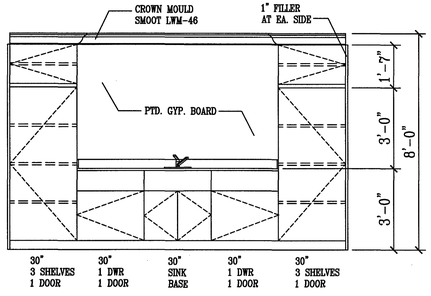

1 INTERIOR ELEVATION–CONFERENCE
3/8"=1'–0"

TOWN OF LA PLATA
APPROVED FOR ISSUE
THIS PLAN APPEARS TO COMPLY WITH THE CODE, BUT IT IS NOT THE AUTHORITY TO VIOLATE ANY CODE OR ORDINANCE
ALL WORK IS SUBJECT TO INSPECTION APPROVAL
KEEP THESE PLANS AT THE JOBSITE

I CERTIFY THAT THESE DOCUMENTS WERE PREPARED OR APPROVED BY ME, AND THAT I AM A DULY LICENSED ARCHITECT UNDER THE LAWS OF THE STATE OF MARYLAND. LICENSE NUMBER 7959, EXPIRATION DATE DECEMBER 31, 2027"

REVISIONS

RENOVATION OF UNIVERSITY OF MARYLAND
MEDICAL CENTER OFFICE BUILDING
616 CHARLES STREET
LA PLATA, MARYLAND 20646

COPYRIGHT R. LITTEN & ASSOCIATES, ARCHITECTS, LLC. NO PORTION OF THIS DRAWING MAY BE REPRODUCED, STORED OR TRANSMITTED BY ANY MEANS WITHOUT PRIOR WRITTEN PERMISSION FROM THE ARCHITECT.

R.L. LITTEN & ASSOCIATES, ARCHITECTS, LLC
300 CHARLES STREET, SUITE 4
P.O.BOX 1920, LAPLATA, MD 20646 (301) 934-1471
e-mail: rllitten.architect@verizon.net

KL
RL
3-27-26
25-41

433

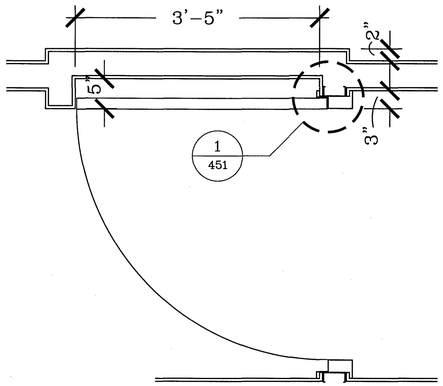

3 WALL DETAIL

SCALE: 1" = 1'-0"

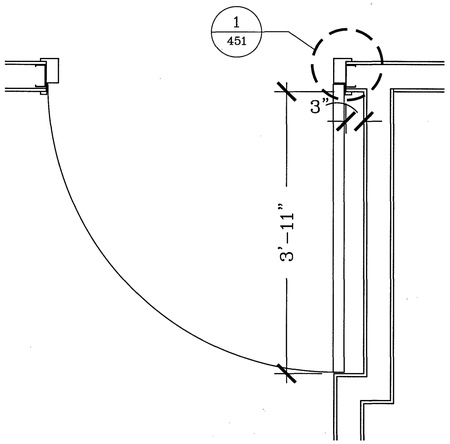

2 WALL DETAIL

SCALE: 1" = 1'-0"

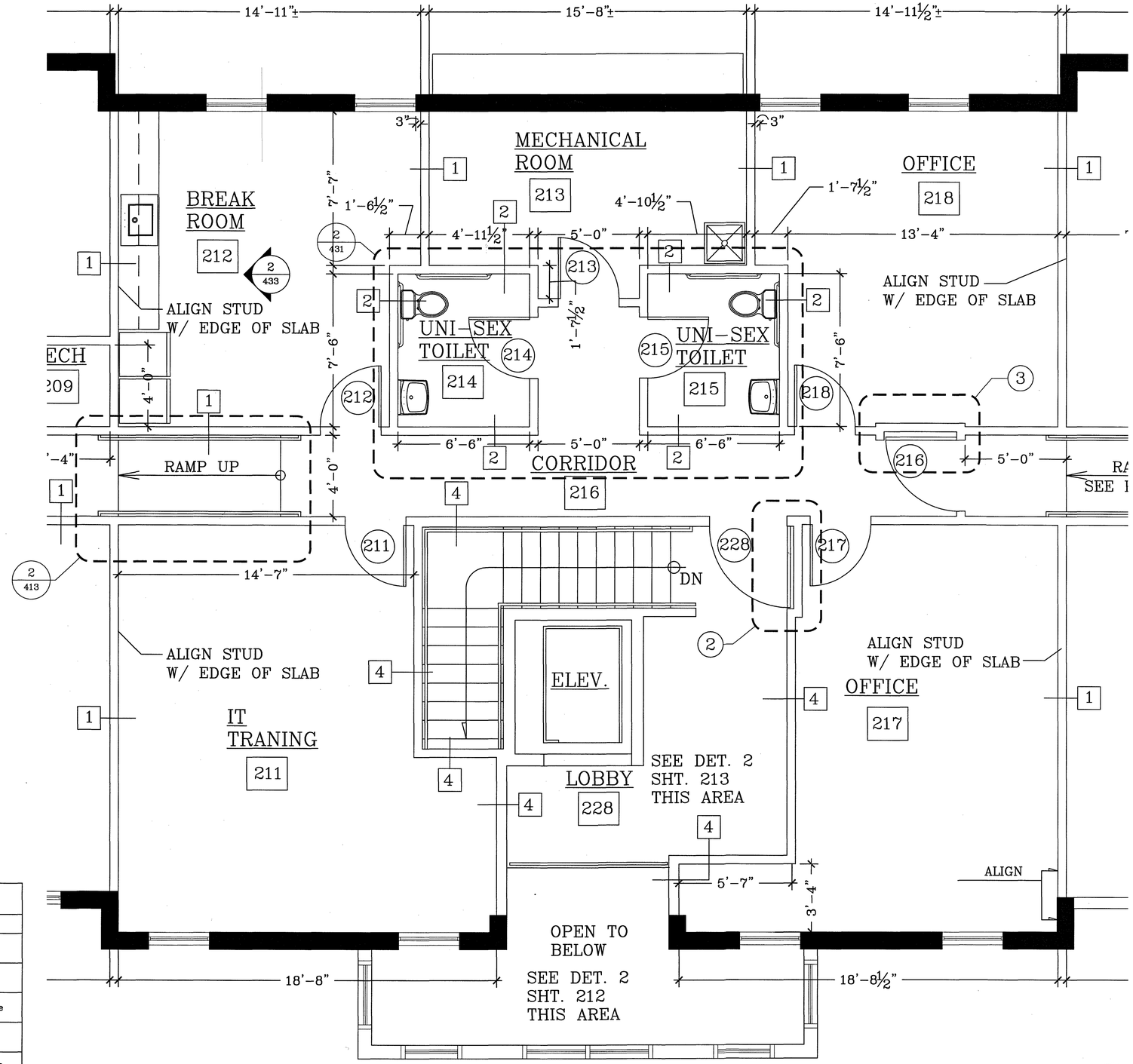

1 PARTIAL FLOOR PLAN – SECOND FLR.

SCALE: 3/8" = 1'-0"

PARTITION SCHEDULE

	Studding	Finish	Height	Rating	Notes
1	3 5/8" MTL., 16" O.C.	1/2" Gyp. board-both sides	To structural deck above	— —	3 1/2" Sound insulation
2	3 5/8" MTL., 16" O.C.	1/2" Gyp. board-one side; 1/2" MR Gyp. board-"wet" side	To structural deck above	— —	3 1/2" Sound insulation
3	3 5/8" MTL., 16" O.C.	2-Layers 5/8" FR Gyp. board-both sides	To structural deck above	2 hr.	GA File No. WP 1522 M.R. gyp. bd.-"Wet" side 3 1/2" Sound insulation
4	3 5/8" MTL., 16" O.C.	1-Layer 5/8" FR Gyp. board-both sides	To structural deck above	1 hr.	GA File No. WP 1072 3 1/2" Sound insulation
5	6" MTL., 16" O.C.	1-Layer 5/8" FR Gyp. board-both sides	To structural deck above	1 hr.	GA File No. 1072 M.R. gyp. bd.-"Wet" side 3 1/2" Sound insulation
6	2x6 WD. STUDS, 16" O.C.	1-Layer 5/8" FR Gyp. board-both sides	To roof top of shaft	1 hr.	

NOTE: ALL METAL STUDS ARE 25 GA. UNO.

TOWN OF LA PLATA
APPROVED FOR ISSUE
THIS PLAN APPEARS TO COMPLY WITH THE CODE, BUT IT IS NOT THE AUTHORITY TO VIOLATE ANY CODE ANY CODE OR ORDINANCE.
ALL WORK IS SUBJECT TO INSPECTION APPROVAL
KEEP THESE PLANS AT THE JOBSITE

I CERTIFY THAT THESE DOCUMENTS WERE PREPARED OR APPROVED BY ME, AND THAT I AM A DULY LICENSED ARCHITECT UNDER THE LAWS OF THE STATE OF MARYLAND. LICENSE NUMBER 7959, EXPIRATION DATE DECEMBER 31, 2027"

REVISIONS

RENOVATION OF UNIVERSITY OF MARYLAND
MEDICAL CENTER OFFICE BUILDING
616 CHARLES STREET
LA PLATA, MARYLAND 20646

COPYRIGHT R. L. LITTEN & ASSOCIATES, ARCHITECTS, LLC. NO PORTION OF THIS DRAWING MAY BE REPRODUCED, STORED OR TRANSMITTED BY ANY MEANS WITHOUT PRIOR WRITTEN PERMISSION FROM THIS ARCHITECT.

R.L. LITTEN & ASSOCIATES, ARCHITECTS, LLC
300 CHARLES STREET, SUITE 4
P.O.BOX 1920, LAPLATA, MD 20646 (301) 934-1471
e-mail: rllitten.architect@verizon.net

KL
RL
3-27-26
25-41

422

KEY:

2X2 LED LIGHT

SUPPLY
DIFFUSER-24x24

RETURN
REGISTER-24x24

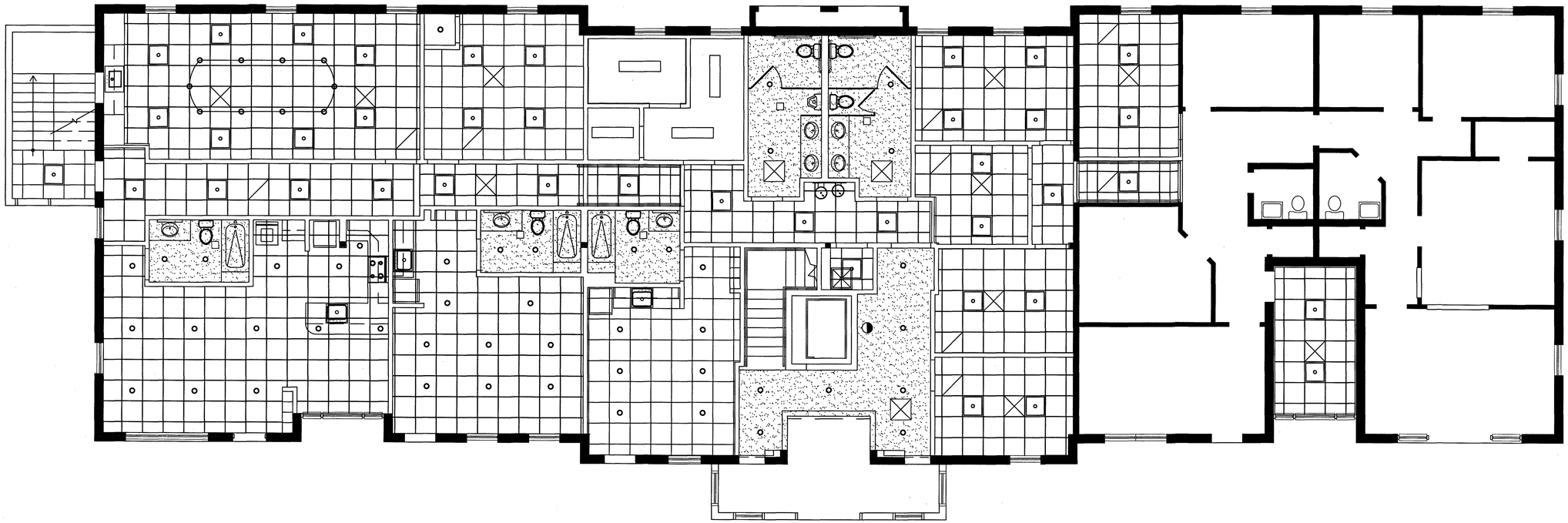

1 REFLECTED CEILING PLAN – FIRST FLOOR
SCALE: 3/16" = 1'-0"

TOWN OF LA PLATA
APPROVED FOR ISSUE
THIS PLAN APPEARS TO COMPLY WITH THE CODE, BUT IT IS NOT THE AUTHORITY TO VIOLATE ANY CODE ANY CODE OR ORDINANCE. ALL WORK IS SUBJECT TO INSPECTION APPROVAL
KEEP THESE PLANS AT THE JOBSITE

STATE OF MARYLAND
RONALD L. LITTEN
7959-R
ARCHITECT

I CERTIFY THAT THESE DOCUMENTS WERE PREPARED OR APPROVED BY ME, AND THAT I AM A DULY LICENSED ARCHITECT UNDER THE LAWS OF THE STATE OF MARYLAND. LICENSE NUMBER 7959, EXPIRATION DATE DECEMBER 31, 2027"

COPYRIGHT R. LITTEN & ASSOCIATES, ARCHITECTS, LLC. NO PORTION OF THIS DRAWING MAY BE REPRODUCED, STORED OR TRANSMITTED BY ANY MEANS WITHOUT PRIOR WRITTEN PERMISSION FROM THE ARCHITECT.

REVISIONS

RENOVATION OF UNIVERSITY OF MARYLAND MEDICAL CENTER OFFICE BUILDING

616 CHARLES STREET
LA PLATA, MARYLAND 20646

R.L. LITTEN & ASSOCIATES, ARCHITECTS, LLC
300 CHARLES STREET, SUITE 4
P.O.BOX 1920, LAPLATA, MD 20646 (301) 934-1471
e-mail: rllitten.architect@verizon.net

KL
RL
3-27-26
25-41

441

KEY:

2X2 LED LIGHT

SUPPLY
DIFFUSER-24x24

RETURN
REGISTER-24x24

1 REFLECTED CEILING PLAN - SECOND FLOOR

SCALE: 3/16" = 1'-0"

TOWN OF LA PLATA
APPROVED FOR ISSUE
THIS PLAN APPEARS TO COMPLY WITH THE CODE, BUT IT IS NOT THE AUTHORITY TO VIOLATE ANY CODE ANY CODE OR ORDINANCE
ALL WORK IS SUBJECT TO INSPECTION APPROVAL
KEEP THESE PLANS AT THE JOBSITE

STATE OF MARYLAND
RONALD L. LITTEN
7950-R
ARCHITECT

I CERTIFY THAT THESE DOCUMENTS WERE PREPARED OR APPROVED BY ME, AND THAT I AM A DULY LICENSED ARCHITECT UNDER THE LAWS OF THE STATE OF MARYLAND. LICENSE NUMBER 7950, EXPIRATION DATE DECEMBER 31, 2027

COPYRIGHT R. LITTEN & ASSOCIATES, ARCHITECTS, LLC. NO PORTION OF THIS DRAWING MAY BE REPRODUCED, STORED OR TRANSMITTED BY ANY MEANS WITHOUT PRIOR WRITTEN PERMISSION FROM THE ARCHITECT

REVISIONS

RENOVATION OF UNIVERSITY OF MARYLAND MEDICAL CENTER OFFICE BUILDING

616 CHARLES STREET
LA PLATA, MARYLAND 20646

R.L. LITTEN & ASSOCIATES, ARCHITECTS, LLC
300 CHARLES STREET, SUITE 4
P.O. BOX 1920, LAPLATA, MD 20646 (301) 934-1471

KL
RL
3-27-26
25-41

442

FINISH SCHEDULE-FIRST FLOOR

Room Key	Room Name	Floor	Walls	Ceiling/Ceiling Hgt.	Notes
101	Overnight Call Doctor	Carpet Squares	GB-Painted	2x2 ACT/8'	4,5,8,9
102	Bath	Ceramic Tile	CT/GB-Painted	GB-Painted/8' (2hr rated)	2,3,8,9,10
103	Corridor	LVP	GB-Painted	2x2 ACT/8'	4,5,7,9
104	Conference	LVP	GB-Painted	2x2 ACT/8'	4,5
105	Office	Carpet Squares	GB-Painted	2x2 ACT/8'	4,5
106	Bath	Ceramic Tile	CT/GB-Painted	GB-Painted/8'	2,3,8,9,10
107	Overnight Call Doctor	Carpet Squares	GB-Painted	2x2 ACT/8'	4,5,8,9
108	Overnight Call Doctor	Carpet Squares	GB-Painted	2x2 ACT/8'	4,5,8,9
109	Bath	Ceramic Tile	CT/GB-Painted	GB-Painted/8'	2,3,8,9,10
110	IT	Sealed Concrete	Plywood	None	7
111	Men's Toilet	Ceramic Tile	CT/GB-Painted	GB-Painted/8'	2,3,10
112	Women's Toilet	Ceramic Tile	CT/GB-Painted	GB-Painted/8'	2,3,10
113	Office	Carpet Squares	GB-Painted	2x2 ACT/8'	4,5
114	Office	Carpet Squares	GB-Painted	2x2 ACT/8'	4,5
115	Office	Carpet Squares	GB-Painted	2x2 ACT/8'	4,5
116	Office	Carpet Squares	GB-Painted	2x2 ACT/8'	4,5
117	New Office	Carpet Squares	GB-Painted	2x2 ACT/8'	4,5
118	Modified Office	Carpet Squares	GB-Painted	2x2 ACT/8'	1,4,5
119	Lobby	LVP	GB-Painted	GB-Painted/8'	3,4,5,7,9
120	Janitor's Closet	Sealed Concrete	GB-Painted	2x2 ACT/8'	3,4,5,6,7
121	Corridor	LVP	GB-Painted	2x2 ACT/8'	1,4,5
122	Stair	Sealed Concrete	GB-Painted	2x2 ACT/8' abv 2nd Flr	4,5
123	Elev. Machine Room	Sealed Concrete	GB-Painted	None	4,5,6,7
124	Utility Room	Sealed Concrete	GB-Painted	None	4,5
125	Mechanical Room	Sealed Concrete	GB-Painted	None	4,5,6,7

FINISH SCHEDULE-SECOND FLOOR

Room Key	Room Name	Floor	Walls	Ceiling/Ceiling Hgt.	Notes
201	Break Room	LVP	GB-Painted	2x2 ACT/8'	4,5
202	Office	Carpet Squares	GB-Painted	2x2 ACT/8'	4,5
203	Office	Carpet Squares	GB-Painted	2x2 ACT/8'	4,5
204	Open Offices	Carpet Squares	GB-Painted	2x2 ACT/8'	4,5
205	Corridor	LVP	GB-Painted	2x2 ACT/8'	4,5
206	Office	Carpet Squares	GB-Painted	2x2 ACT/8'	4,5
207	Office	Carpet Squares	GB-Painted	2x2 ACT/8'	4,5,
208	Office	Carpet Squares	GB-Painted	2x2 ACT/8'	4,5
209	Mechanical	Sealed Concrete	GB-Painted	None	4,5
210	Reception	Carpet Squares	GB-Painted	2x2 ACT/8'	4,5
211	IT Training	LVP	GB-Painted	2x2 ACT/8'	4,5,7
212	Break Room	LVP	GB-Painted	2x2 ACT/8'	4,5
213	Mechanical	Sealed Concrete	GB-Painted	None	4,5
214	Uni-sex Toilet	Ceramic Tile	CT/GB-Painted	GB-Painted/8'	2,3,10
215	Uni-sex Toilet	Ceramic Tile	CT/GB-Painted	GB-Painted/8'	2,3,10
216	Corridor	LVP	GB-Painted	2x2 ACT/8'	4,5,7
217	Office	Carpet Squares	GB-Painted	2x2 ACT/8'	4,5,7
218	Office	Carpet Squares	GB-Painted	2x2 ACT/8'	4,5
219	Office	Carpet Squares	GB-Painted	2x2 ACT/8'	4,5
220	Office	Carpet Squares	GB-Painted	2x2 ACT/8'	4,5
221	Office	Carpet Squares	GB-Painted	2x2 ACT/8'	4,5
222	Mechanical	Sealed Concrete	GB-Painted	None	4,5
223	Corridor	Carpet Squares	GB-Painted	2x2 ACT/8'	4,5
224	Office	Carpet Squares	GB-Painted	2x2 ACT/8'	4,5
225	Office	Carpet Squares	GB-Painted	2x2 ACT/8'	4,5
226	Office	Carpet Squares	GB-Painted	2x2 ACT/8'	4,5
227	Office	Carpet Squares	GB-Painted	2x2 ACT/8'	4,5
228	Lobby	LVP	GB-Painted	2x2 ACT/8'	3,4,5,6,7

FINISH NOTES:

1. Replace all existing finishes.
2. Semi-gloss paint on moisture resistant gypsum board walls.
3. Flat paint on gypsum board ceilings.
4. Eggshell paint on gypsum board walls.
5. Vinyl cove base on walls.
6. Fire rated gypsum board ceiling-1 hour fire rated.
7. Fire rated gypsum board walls where shown-1 hour fire rated.
8. Fire rated gypsum board ceiling above ACT-2 hour fire rated.
9. Fire rated gypsum board walls where shown-2 hour fire rated.
10. Ceramic tile to 48"aff with cove base at walls.

FINISH KEY

GB-Painted	Gypsum Board-painted
2x2 ACT	Suspended Acoustical Tile Ceiling-2x2 Grid
CT	Ceramic Tile
LVP	Luxury Vinyl Plank

DOOR SCHEDULE-FIRST FLOOR

◯	Location	Size	Type	Lock	Door Notes	Notes
101A	Overnight Call Doctor	3'-0" X 7'-0"	AL/GL	D	1,4,7,8	
101B	Laundry	PR. 5'-0" X 7'-0" Bi-fd	MDF	--	3	BI-FOLD DR HDW
102	Bath	3'-0" X 7'-0"	MDF	E	2,9	
103	Corridor	3'-0" X 7'-0"	HM	B	1,4	60 MIN. FIRE RATED
104	Conference	3'-0" X 7'-0"	MDF	A	1,2	
105	Office	3'-0" X 7'-0"	MDF	A	2	
106	Bath	3'-0" X 7'-0"	MDF	E	2,9	
107	Overnight Call Doctor	3'-0" X 7'-0"	AL/GL	D	1,4,7,8	
108	Overnight Call Doctor	3'-0" X 7'-0"	AL/GL	D	1,4,7,8	
109	Bath	3'-0" X 7'-0"	MDF	E	2,9	
110	IT	3'-0" X 7'-0"	MDF	C	1,2	
111	Men's Toilet	3'-0" X 7'-0"	MDF	B	1,2,9	
112	Women's Toilet	3'-0" X 7'-0"	MDF	B	1,2,9	
113	Office	3'-0" X 7'-0"	MDF	A	2	
114	Office	3'-0" X 7'-0"	MDF	A	2	
115	Office	3'-0" X 7'-0"	MDF	A	2	
116	Office	3'-0" X 7'-0"	MDF	A	1,2	60 MIN. FIRE RATED
117	New Office	3'-0" X 7'-0"	MDF	A	2	
118	Modified Office	EX.				EX.
119	Lobby	4'-0" X 7'-0"	HM	B	1,10,11,12	60 MIN. FIRE RATED
120	Janitor's Closet	3'-0" X 7'-0"	HM	C	1	
122	Stair	3'-0" X 7'-0"	HM	D	1,4,7,8	
123	Elev. Machine Room	3'-0" X 7'-0"	HM	C	1,2	60 MIN. FIRE RATED
124	Utility Room	3'-0" X 7'-0"	MDF	C	1,4	
125	Mechanical Room	3'-0" X 7'-0"	MDF	C	1,2	

DOOR SCHEDULE-SECOND FLOOR

◯	Location	Size	Type	Lock	Door Notes	Notes
201	Closet	PR. 2'-0" X 7'-0"	MDF	--	3,6	
202	Office	3'-0" X 7'-0"	MDF	A	2	
203	Office	3'-0" X 7'-0"	MDF	A	2	
205	Corridor	3'-0" X 7'-0"	HM	B	1,4	
206	Office	3'-0" X 7'-0"	MDF	A	2	
207	Office	3'-0" X 7'-0"	MDF	A	2	
208	Office	3'-0" X 7'-0"	MDF	A	2	
209	Mechanical	3'-0" X 7'-0"	MDF	C	1,2,7	
210A	Reception	3'-0" X 7'-0"	MDF	B	4	
210B	Reception	3'-0" X 7'-0"	MDF	A	1,4	
211	IT Training	3'-0" X 7'-0"	MDF	A	2	
212	Break Room	3'-0" X 7'-0"	MDF	B	1,2	
213	Mechanical	3'-0" X 7'-0"	MDF	C	1,4,7	
214	Uni-sex Toilet	3'-0" X 7'-0"	MDF	E	4,9	
215	Uni-sex Toilet	3'-0" X 7'-0"	MDF	E	4,9	
216	Corridor	3'-6" X 7'-9"	HM	B	1,10,11,12	"NOT AN EXIT" SIGN
217	Office	3'-0" X 7'-0"	MDF	A	2	
218	Office	3'-0" X 7'-0"	MDF	A	2	
219	Office	3'-0" X 7'-0"	MDF	A	2	
220	Office	3'-0" X 7'-0"	MDF	A	2	
221	Office	3'-0" X 7'-0"	MDF	A	2	
222	Mechanical	3'-0" X 7'-0"	MDF	C	1,2,7	
223	Corridor	3'-0" X 7'-0"	MDF	A	1,4	
224	Office	3'-0" X 7'-0"	MDF	A	2	
225	Office	3'-0" X 7'-0"	MDF	A	2	
226	Office	3'-0" X 7'-0"	MDF	A	2	
227	Office	3'-0" X 7'-0"	MDF	A	2	
228	Lobby	4'-0" X 7'-9"	HM	B	1,10,11,12	60 MIN. FIRE RATED

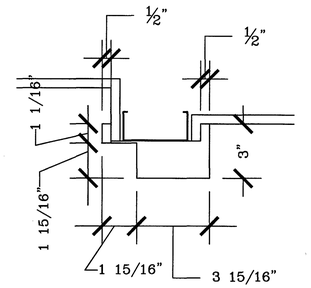

1 DOOR JAMB DETAIL
SCALE: 3" = 1'-0"

DOOR NOTES

1. CLOSER
2. DOOR STOP (WALL UNLESS NOT SUITABLE, THEN FLOOR)
3. PUSH AND PULL BARS
4. OVERHEAD STOP
5. FLUSH BOLTS
6. BALL CATCHES W/FIXED HANDLES
7. WEATHERSTRIPPING
8. ADA EXTERIOR THRESHOLD
9. ADA MARBLE THRESHOLD
10. PANIC DEVICE
11. MAGNETIC HOLD OPEN ON SMOKE DETECTORS
12. SPECIAL JAMB-SEE DETAIL

LOCK/LATCHSET KEY (ALL PROVIDED WITH LEVERS)

A CORRIDOR LOCK
B PASSAGE LATCH
C STOREROOM LOCK
D ENTRANCE LOCK
E PRIVACY LOCK

DOOR TYPES

MDF - SOLID CORE MDF (PAINTED)
W/ HOLLOW METAL FRAMES
AL/GL - ALUM FRAMES, RAILS, AND STILES
(CLEAR ANODIZED) W/ CLEAR GLAZING
HM - HOLLOW METAL DOOR (FLUSH)
AND FRAME (PAINTED)

TOWN OF LA PLATA
APPROVED FOR ISSUE
THIS PLAN APPEARS TO COMPLY WITH THE CODE, BUT IT IS NOT THE AUTHORITY TO VIOLATE ANY CODE ANY CODE OR ORDINANCE
ALL WORK IS SUBJECT TO INSPECTION APPROVAL
KEEP THESE PLANS AT THE JOBSITE

STATE OF MARYLAND
RONALD L. LITTEN
9959-R
ARCHITECT

I CERTIFY THAT THESE DOCUMENTS WERE PREPARED OR APPROVED BY ME, AND THAT I AM A DULY LICENSED ARCHITECT UNDER THE LAWS OF THE STATE OF MARYLAND. LICENSE NUMBER 7959. EXPIRATION DATE DECEMBER 31, 2027"

REVISIONS

RENOVATION OF UNIVERSITY OF MARYLAND MEDICAL CENTER OFFICE BUILDING

616 CHARLES STREET
LA PLATA, MARYLAND 20646

COPYRIGHT R. LITTEN & ASSOCIATES, ARCHITECTS, LLC. NO PORTION OF THIS DRAWING MAY BE REPRODUCED, STORED OR TRANSMITTED BY ANY MEANS WITHOUT PRIOR WRITTEN PERMISSION FROM THE ARCHITECT.

R.L. LITTEN & ASSOCIATES, ARCHITECTS, LLC
300 CHARLES STREET, SUITE 4
P.O.BOX 1920, LAPLATA, MD 20646 (301) 934-1471
e-mail: rllitten.architect@verizon.net

KL
RL
3-27-26
25-41

451

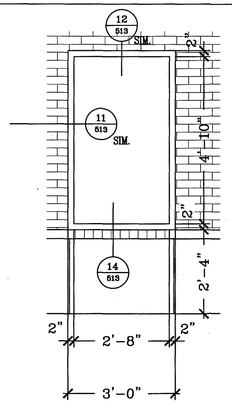

8 PARTIAL ELEVATION –WDO A

SCALE: 1/2 = 1'–0"

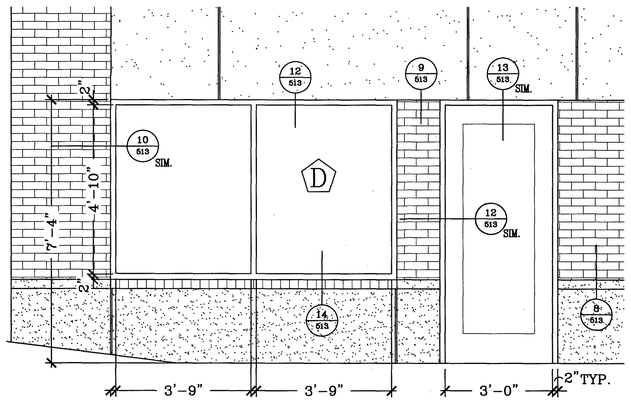

7 PARTIAL ELEVATION–DOOR/WDO D

SCALE: 1/2 = 1'–0"

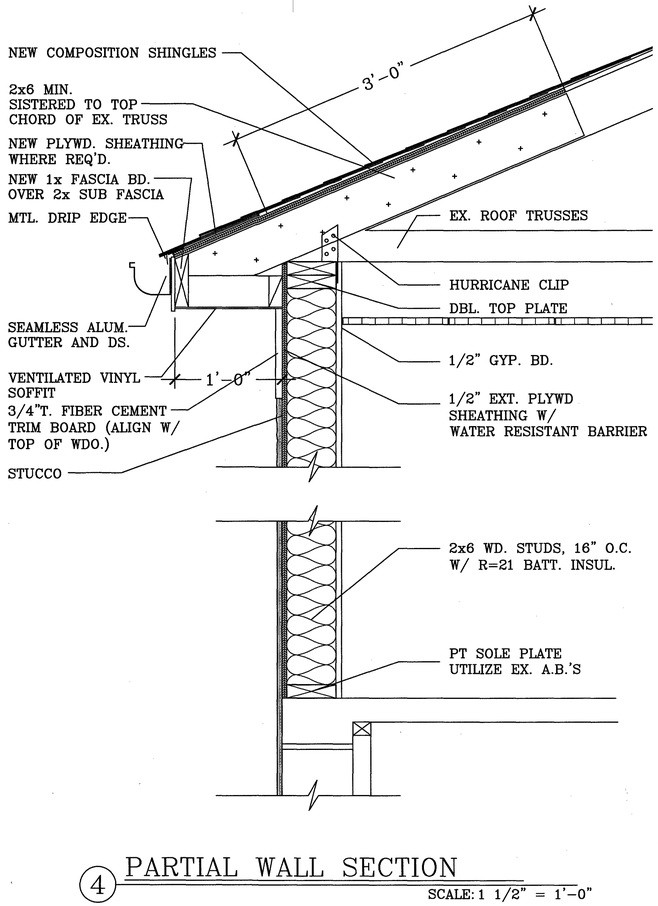

4 PARTIAL WALL SECTION

SCALE: 1 1/2" = 1'–0"

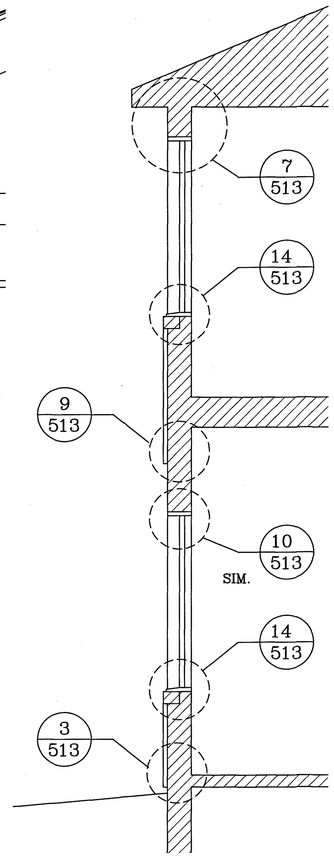

3 WALL SECTION – TYPICAL

SCALE: 1/2 = 1'–0"

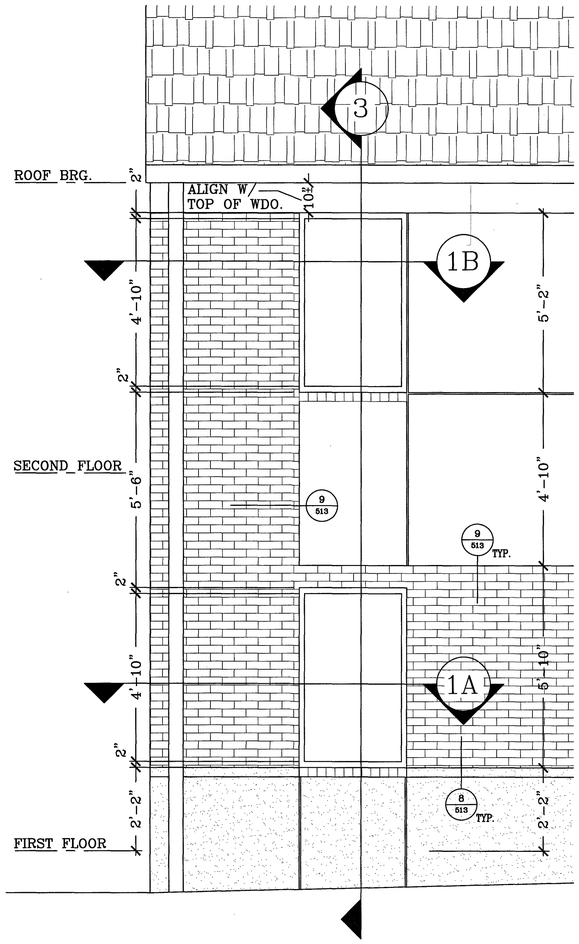

2 PARTIAL ELEVATION – TYPICAL

SCALE: 1/2 = 1'–0"

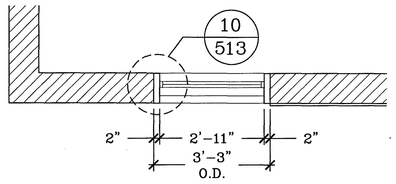

1B PARITAL 2ND FLOOR PLAN – TYPICAL

SCALE: 1/2 = 1'–0"

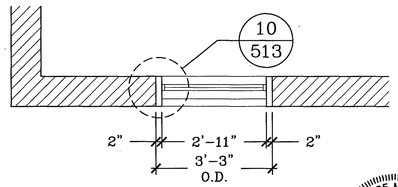

1A PARITAL 1ST FLOOR PLAN – TYPICAL

SCALE: 1/2 = 1'–0"

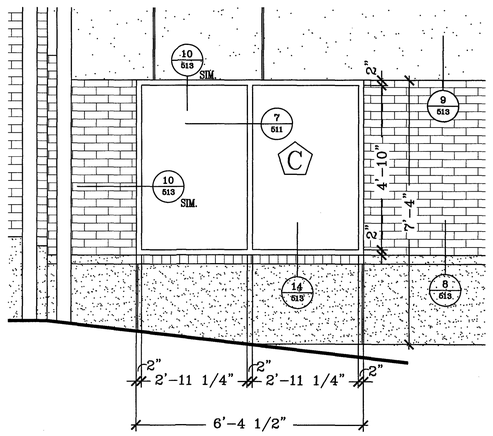

6 PARTIAL ELEVATION – WDO C

SCALE: 1/2 = 1'–0"

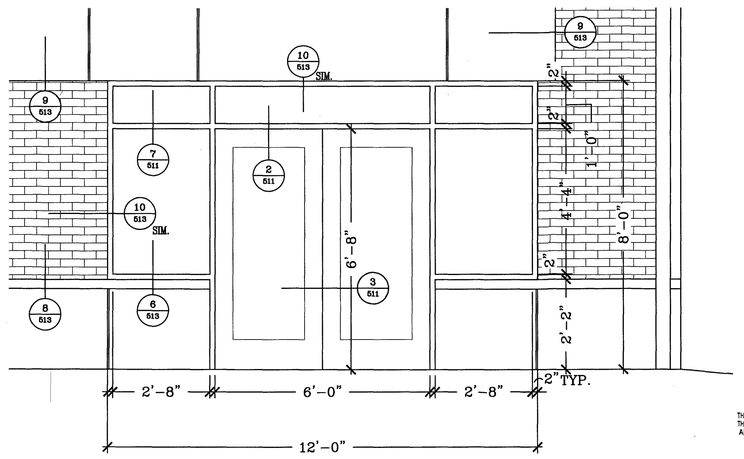

5 PARTIAL ELEVATION –DOOR/WDO B

SCALE: 1/2 = 1'–0"

TOWN OF LA PLATA
APPROVED FOR ISSUE
THIS PLAN APPEARS TO COMPLY WITH THE CODE, BUT IT IS NOT THE AUTHORITY TO VIOLATE ANY CODE ANY CODE OR ORDINANCE. ALL WORK IS SUBJECT TO INSPECTION APPROVAL
KEEP THESE PLANS AT THE JOBSITE

Revisions

RENOVATION OF UNIVERSITY OF MARYLAND MEDICAL CENTER OFFICE BUILDING

616 CHARLES STREET
LA PLATA, MARYLAND 20646

COPYRIGHT © LITTEN & ASSOCIATES, ARCHITECTS, LLC. NO PORTION OF THIS DRAWING MAY BE REPRODUCED, STORED OR TRANSMITTED BY ANY MEANS WITHOUT PRIOR WRITTEN PERMISSION FROM THE ARCHITECT.

R.L. LITTEN & ASSOCIATES, ARCHITECTS, LLC
300 CHARLES STREET,SUITE 4
P.O. BOX 1920, LAPLATA, MD 20646 (301) 934-1471

WDU
RL
3-27-26
25-41

501

"I CERTIFY THAT THESE DOCUMENTS WERE PREPARED OR APPROVED BY ME, AND THAT I AM A DULY LICENSED ARCHITECT UNDER THE LAWS OF THE STATE OF MARYLAND. LICENSE NUMBER 7959, EXPIRATION DATE DECEMBER 31, 2027"

STATE OF MARYLAND
RONALD L. LITTEN
7959
ARCHITECT

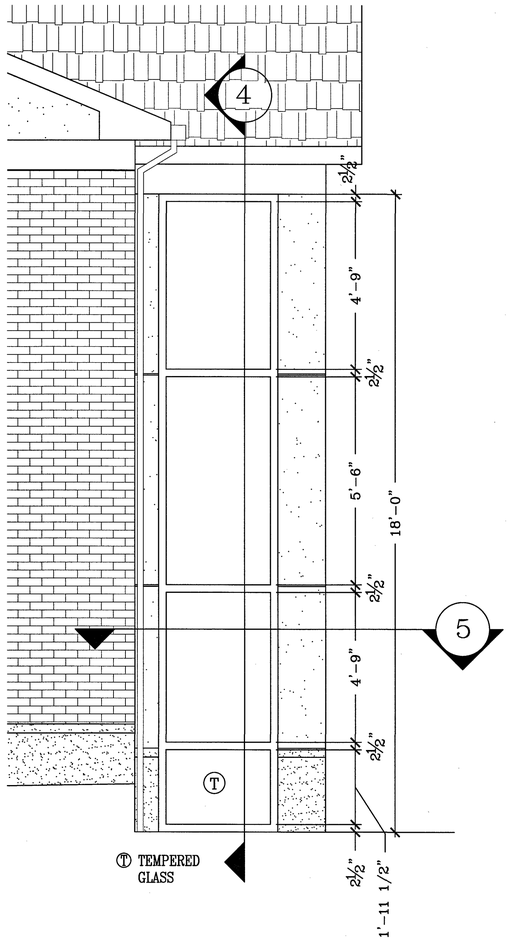

6 PARTIAL ELEVATION – LOBBY
SCALE: 1/2 = 1'-0"

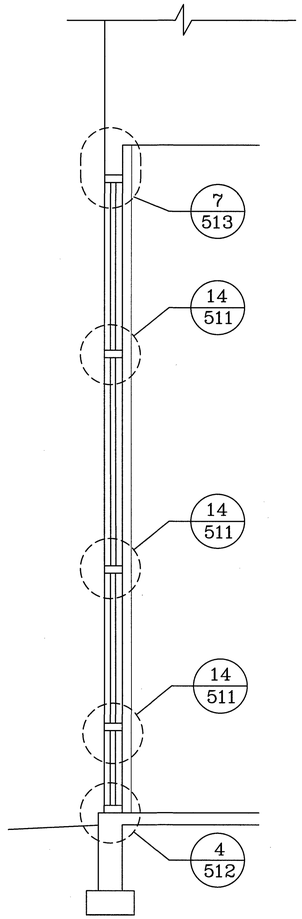

4 PARTIAL SECTION – LOBBY WDO.
SCALE: 1/2 = 1'-0"

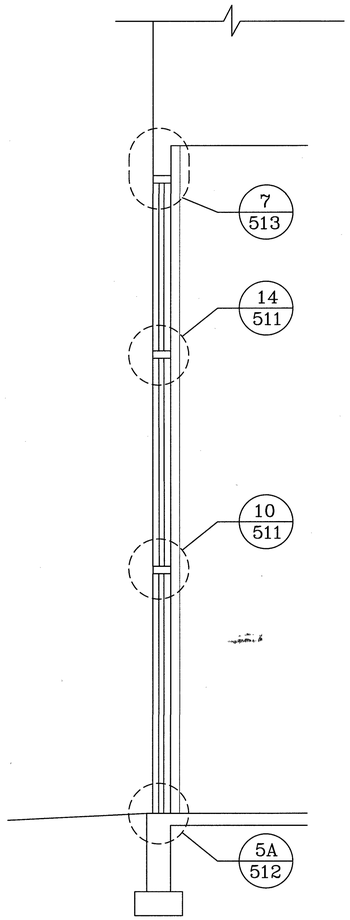

3 PARTIAL SECTION – LOBBY DOOR
SCALE: 1/2 = 1'-0"

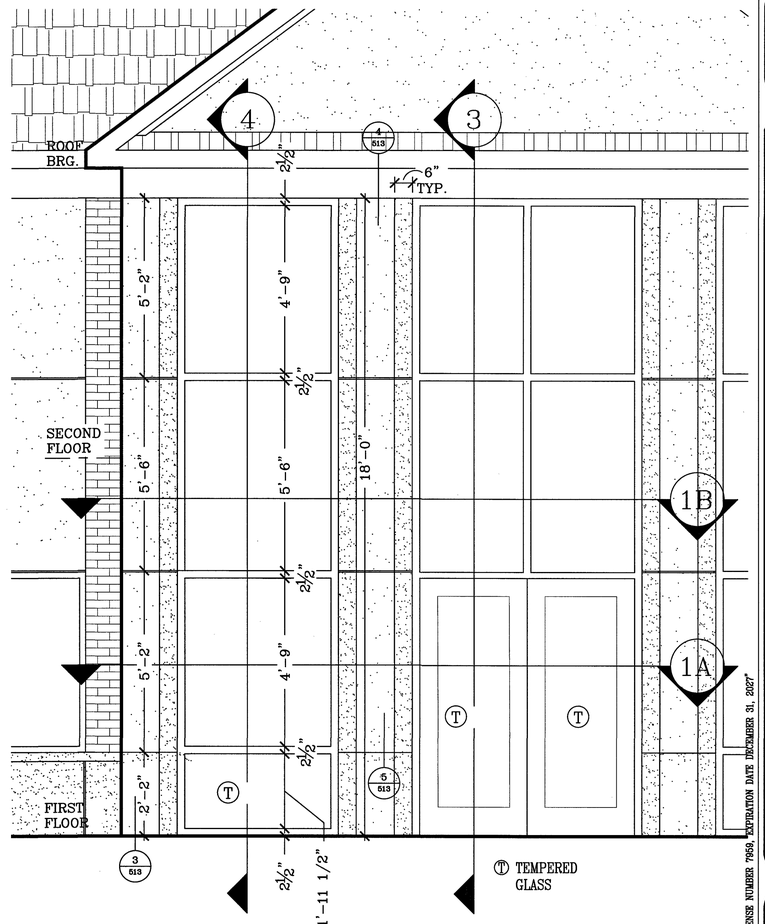

2 PARTIAL ELEVATION – LOBBY
SCALE: 1/2 = 1'-0"

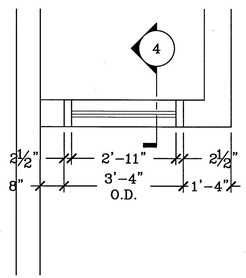

5 PARTIAL PLAN – LOBBY
SCALE: 1/2 = 1'-0"

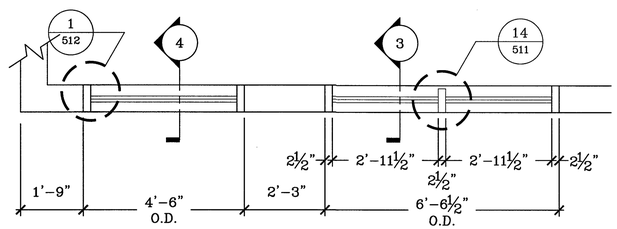

1B PARTIAL PLAN 2ND FLOOR– LOBBY
SCALE: 1/2 = 1'-0"

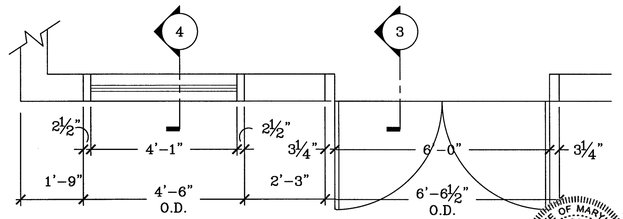

1A PARTIAL PLAN 1ST FLOOR – LOBBY
SCALE: 1/2 = 1'-0"

TOWN OF LA PLATA
APPROVED FOR ISSUE
THIS PLAN APPEARS TO COMPLY WITH THE CODE, BUT IT IS NOT THE AUTHORITY TO VIOLATE ANY CODE ANY CODE OR ORDINANCE
ALL WORK IS SUBJECT TO INSPECTION APPROVAL
KEEP THESE PLANS AT THE JOBSITE

STATE OF MARYLAND
RONALD L. LITTEN
7959-R
ARCHITECT

"I CERTIFY THAT THESE DOCUMENTS WERE PREPARED OR APPROVED BY ME, AND THAT I AM A DULY LICENSED ARCHITECT UNDER THE LAWS OF THE STATE OF MARYLAND. LICENSE NUMBER 7959, EXPIRATION DATE DECEMBER 31, 2027"

Revisions

RENOVATION OF UNIVERSITY OF MARYLAND MEDICAL CENTER OFFICE BUILDING

616 CHARLES STREET
LA PLATA, MARYLAND 20646

COPYRIGHT BY LITTEN & ASSOCIATES, ARCHITECTS, LLC. NO PORTION OF THIS DRAWING MAY BE REPRODUCED, STORED OR TRANSMITTED BY ANY MEANS WITHOUT PRIOR WRITTEN PERMISSION FROM THIS ARCHITECT.

R.L. LITTEN & ASSOCIATES, ARCHITECTS, LLC
300 CHARLES STREET,SUITE 4
P.O. BOX 1920, LAPLATA, MD 20646 (301) 934-1471

WDU
RL
3-27-26
25-41

502

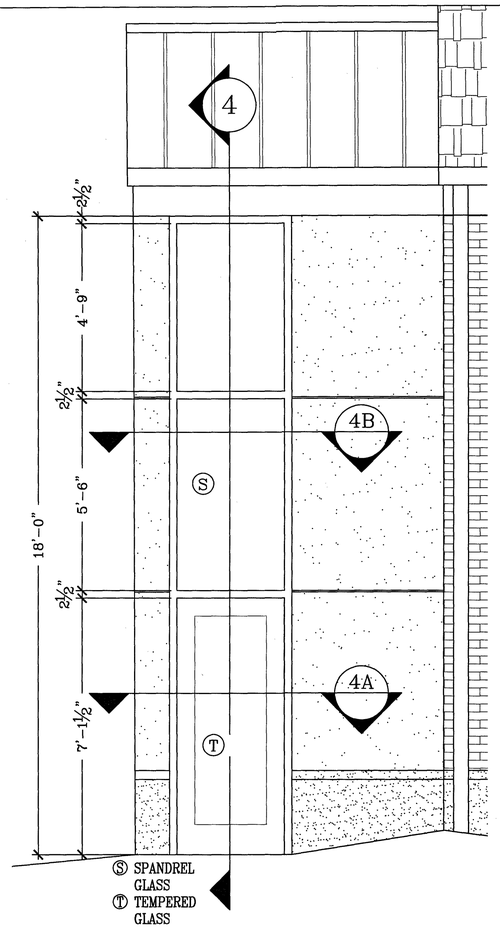

5 PARTIAL ELEVATION – STAIR

SCALE: 1/2 = 1'-0"

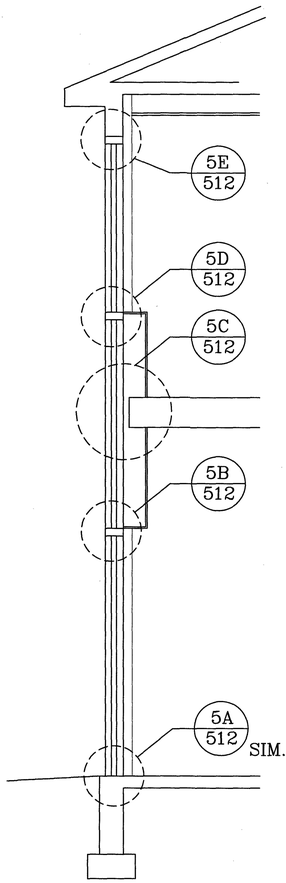

4 SECTION – STAIR

SCALE: 1/2 = 1'-0"

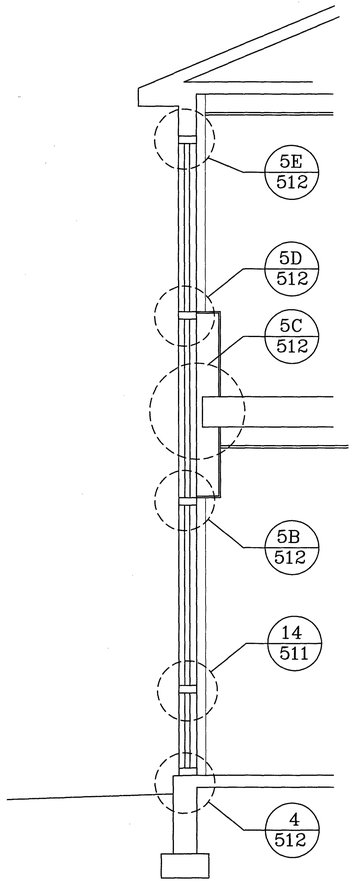

3 SECTION – SLOT

SCALE: 1/2 = 1'-0"

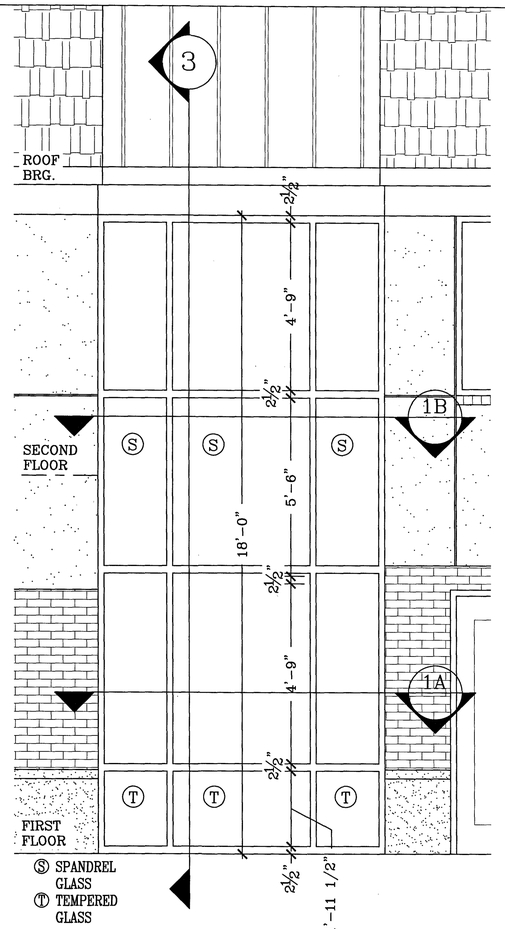

2 PARTIAL ELEVATION –"SLOT"

SCALE: 1/2 = 1'-0"

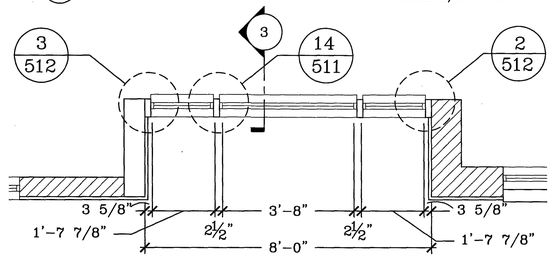

1B PARTIAL 2ND FLOOR PLAN –"SLOT"

SCALE: 1/2 = 1'-0"

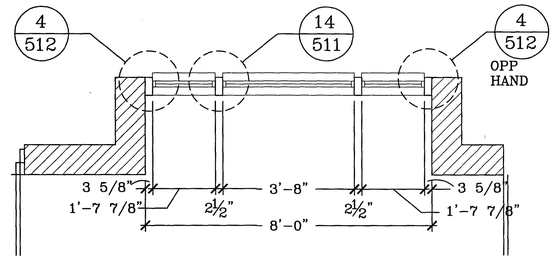

1A PARTIAL 1ST FLOOR PLAN –"SLOT"

SCALE: 1/2 = 1'-0"

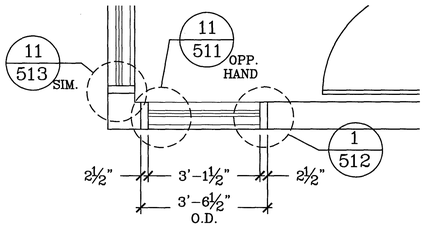

5B PARTIAL 2ND FLOOR PLAN – STAIR

SCALE: 1/2 = 1'-0"

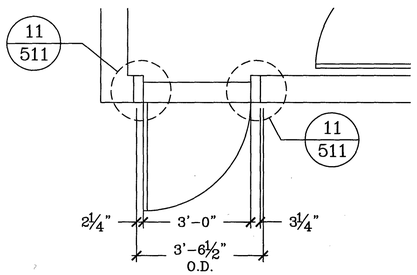

5A PARTIAL 1ST FLOOR PLAN – STAIR

SCALE: 1/2 = 1'-0"

TOWN OF LA PLATA
APPROVED FOR ISSUE
THIS PLAN APPEARS TO COMPLY WITH THE CODE, BUT IT IS NOT THE AUTHORITY TO VIOLATE ANY CODE ANY CODE OR ORDINANCE. ALL WORK IS SUBJECT TO INSPECTION APPROVAL.
KEEP THESE PLANS AT THE JOBSITE.

Revisions

RENOVATION OF UNIVERSITY OF MARYLAND MEDICAL CENTER OFFICE BUILDING

616 CHARLES STREET
LA PLATA, MARYLAND 20646

COPYRIGHT R. L. LITTEN & ASSOCIATES, ARCHITECTS, LLC. NO PORTION OF THIS DRAWING MAY BE REPRODUCED, STORED OR TRANSMITTED BY ANY MEANS WITHOUT PRIOR WRITTEN PERMISSION FROM THIS ARCHITECT.

I CERTIFY THAT THESE DOCUMENTS WERE PREPARED OR APPROVED BY ME, AND THAT I AM A DULY LICENSED ARCHITECT UNDER THE LAWS OF THE STATE OF MARYLAND. LICENSE NUMBER 7959, EXPIRATION DATE DECEMBER 31, 2027"

STATE OF MARYLAND
RONALD L. LITTEN
7959
REGISTERED
ARCHITECT

R.L. LITTEN & ASSOCIATES, ARCHITECTS, LLC
300 CHARLES STREET,SUITE 4
P.O. BOX 1920, LAPLATA, MD 20646 (301) 934-1471

WDU
RL
3-27-26
25-41

503

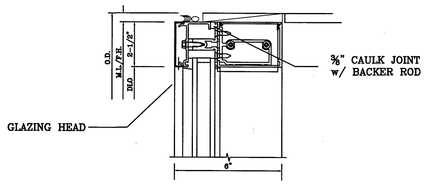

15 HEAD DETAIL–CURTAIN WALL
3"=1'–0"

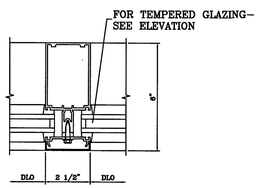

14 MULLION DETAIL–CURTAIN WALL
3"=1'–0"

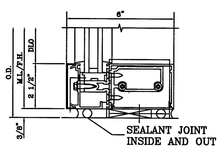

13 SILL DETAIL–CURTAIN WALL
3"=1'–0"

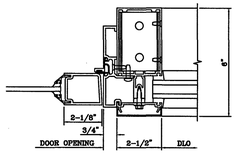

12 DOOR JAMB DETAIL–CURTAIN WALL
3"=1'–0"

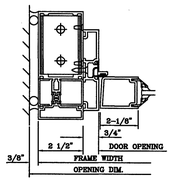

11 DOOR JAMB DETAIL–CURTAIN WALL
3"=1'–0"

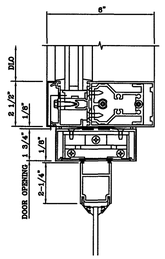

10 DOOR HEAD DETAIL–CURTAIN WALL
3"=1'–0"

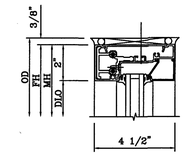

9 HEAD DETAIL–WINDOW
3"=1'–0"

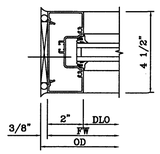

8 JAMB DETAIL–WINDOW
3"=1'–0"

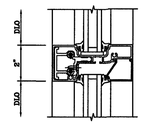

7 MULLION DETAIL–WINDOW
3"=1'–0"

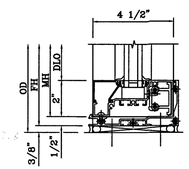

6 SILL DETAIL–WINDOW
3"=1'–0"

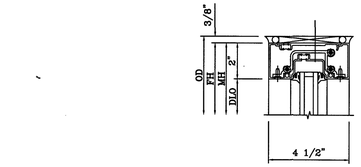

5 HEAD DETAIL–TRANSOM
3"=1'–0"

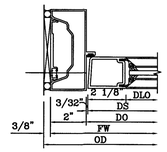

4 JAMB DETAIL–DOOR
3"=1'–0"

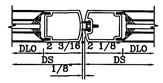

3 STILE DETAIL–DOOR
3"=1'–0"

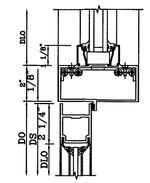

2 DOOR HEAD DETAIL–TRANSOM
3"=1'–0"

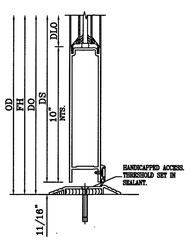

1 THRESHOLD DETAIL–DOOR
3"=1'–0"

TOWN OF LA PLATA
APPROVED FOR ISSUE
THIS PLAN APPEARS TO COMPLY WITH THE CODE, BUT IT IS NOT THE AUTHORITY TO VIOLATE ANY CODE ANY CODE OR ORDINANCE
ALL WORK IS SUBJECT TO INSPECTION APPROVAL
KEEP THESE PLANS AT THE JOBSITE

STATE OF MARYLAND
RONALD L. LITTEN
7959-R
ARCHITECT

"I CERTIFY THAT THESE DOCUMENTS WERE PREPARED OR APPROVED BY ME, AND THAT I AM A DULY LICENSED ARCHITECT UNDER THE LAWS OF THE STATE OF MARYLAND. LICENSE NUMBER 7959, EXPIRATION DATE DECEMBER 31, 2027"

REVISIONS

RENOVATION OF UNIVERSITY OF MARYLAND MEDICAL CENTER OFFICE BUILDING

616 CHARLES STREET
LA PLATA, MARYLAND 20646

COPYRIGHT BY LITTEN & ASSOCIATES, ARCHITECTS, LLC. NO PORTION OF THESE DRAWINGS MAY BE REPRODUCED, STORED OR TRANSMITTED BY ANY MEANS WITHOUT PRIOR WRITTEN PERMISSION FROM THE ARCHITECT.

R.L. LITTEN & ASSOCIATES, ARCHITECTS, LLC
300 CHARLES STREET, SUITE 4
P.O.BOX 1920, LAPLATA, MD 20646 (301) 934-1471
e-mail: rllitten.architect@verizon.net

KL
RL
3-27-26
25-41

511

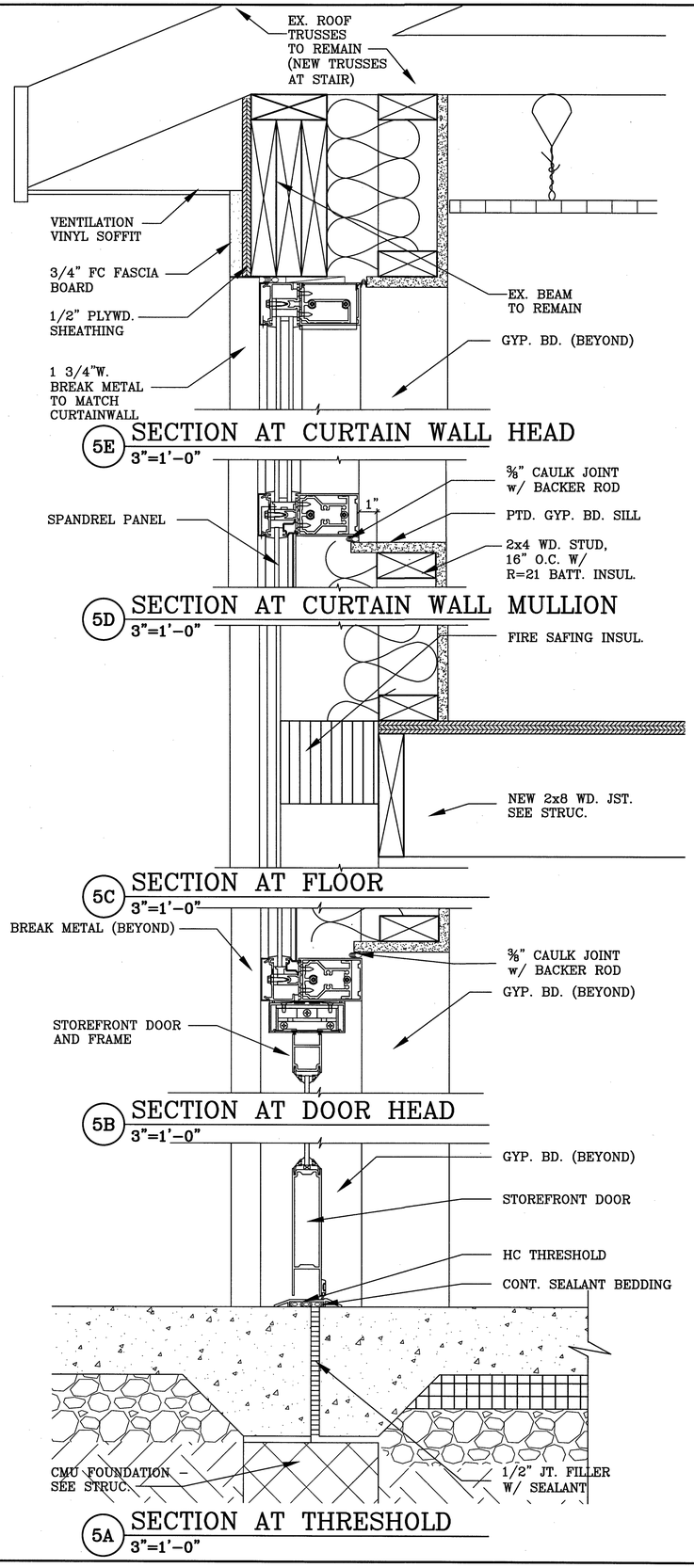

5E SECTION AT CURTAIN WALL HEAD
3"=1'-0"

5D SECTION AT CURTAIN WALL MULLION
3"=1'-0"

5C SECTION AT FLOOR
3"=1'-0"

5B SECTION AT DOOR HEAD
3"=1'-0"

5A SECTION AT THRESHOLD
3"=1'-0"

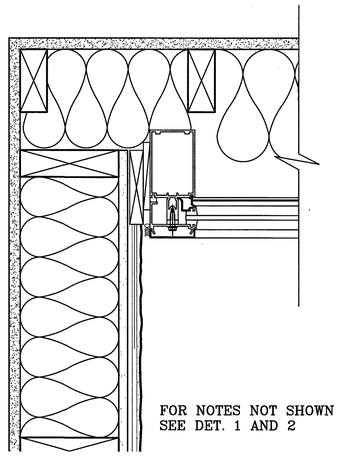

3 JAMB DETAIL- "SLOT"
3"=1'-0"

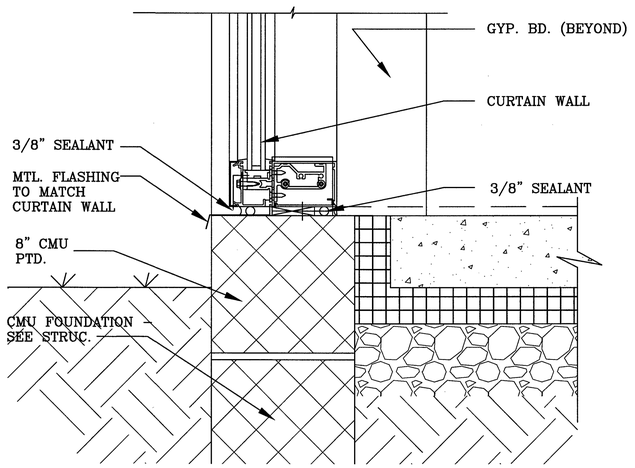

4 SILL DETAIL-CURTAIN WALL
3"=1'-0"

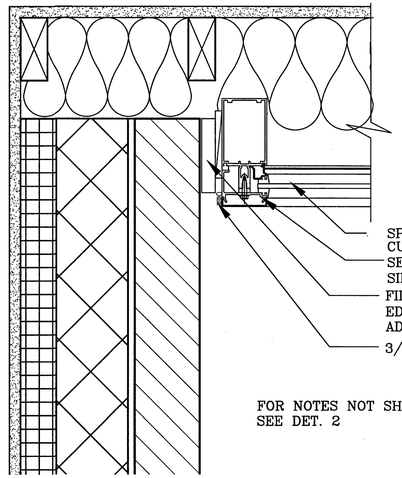

4 JAMB DETAIL AT SLOT
3"=1'-0"

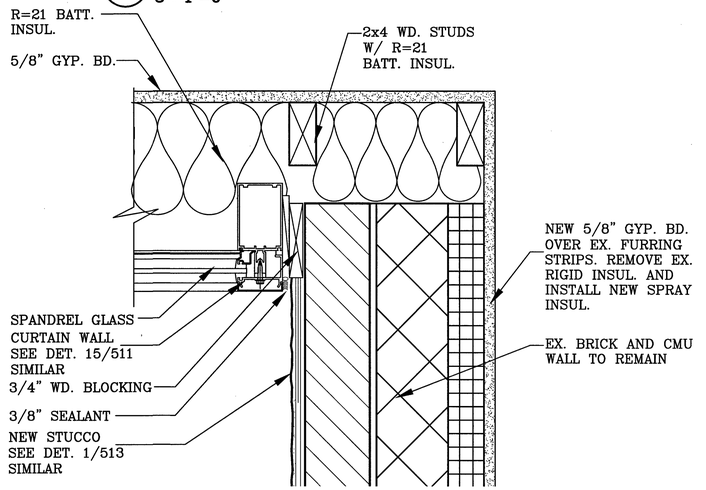

2 JAMB DETAIL AT SLOT
3"=1'-0"

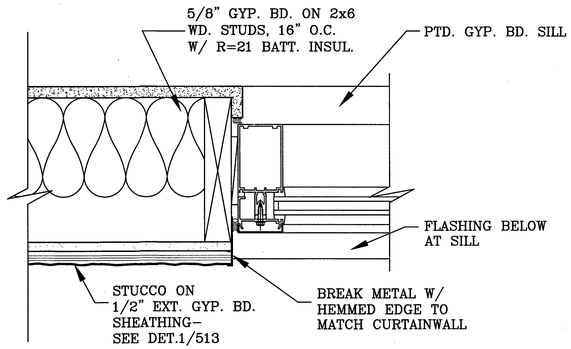

1 JAMB DETAIL-STUCCO
3"=1'-0"

TOWN OF LA PLATA
APPROVED FOR ISSUE
THIS PLAN APPEARS TO COMPLY WITH THE CODE, BUT IT IS NOT THE AUTHORITY TO VIOLATE ANY CODE ANY CODE OR ORDINANCE
ALL WORK IS SUBJECT TO INSPECTION APPROVAL
KEEP THESE PLANS AT THE JOBSITE

STATE OF MARYLAND · RONALD L. LITTEN · 7959-R · ARCHITECT

REVISIONS

RENOVATION OF UNIVERSITY OF MARYLAND
MEDICAL CENTER OFFICE BUILDING
616 CHARLES STREET
LA PLATA, MARYLAND 20646

COPYRIGHT RL LITTEN & ASSOCIATES, ARCHITECTS, LLC. NO PORTION OF THIS DRAWING MAY BE REPRODUCED, STORED OR TRANSMITTED BY ANY MEANS WITHOUT PRIOR WRITTEN PERMISSION FROM THIS ARCHITECT.

R.L. LITTEN & ASSOCIATES, ARCHITECTS, LLC
300 CHARLES STREET, SUITE 4
P.O.BOX 1920, LAPLATA, MD 20646 (301) 934-1471
e-mail: rllitten.architect@verizon.net

KL
RL
3-27-26
25-41

512

I CERTIFY THAT THESE DOCUMENTS WERE PREPARED OR APPROVED BY ME, AND THAT I AM A DULY LICENSED ARCHITECT UNDER THE LAWS OF THE STATE OF MARYLAND. LICENSE NUMBER 7959, EXPIRATION DATE DECEMBER 31, 2027"

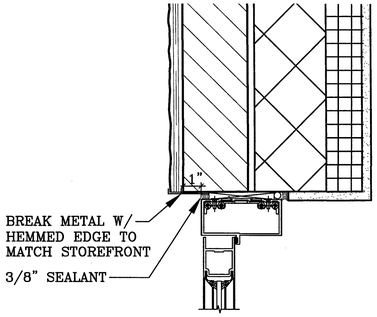

13 HEAD DETAIL– DOOR
3"=1'–0"

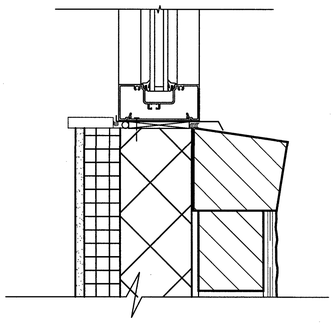

14 SILL DETAIL AT WINDOW
3"=1'–0"

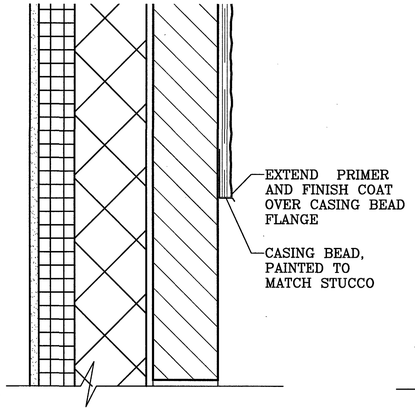

9 STUCCO OVER BRICK TERMINATION
SCALE: NTS.

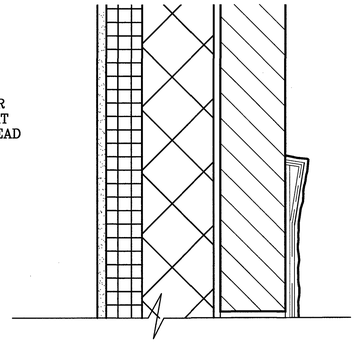

8 STUCCO ROWLOCK– EX. WALL
SCALE: NTS.

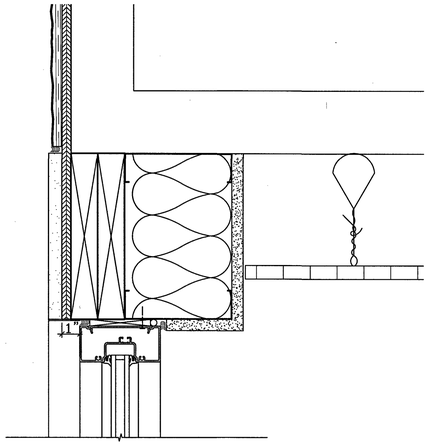

7 STUCCO– ROOF TRUSS
SCALE: NTS.

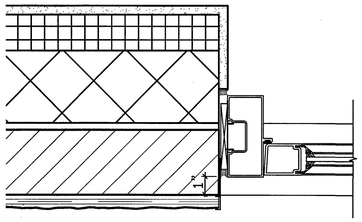

12 JAMB DETAIL– DOOR
3"=1'–0"

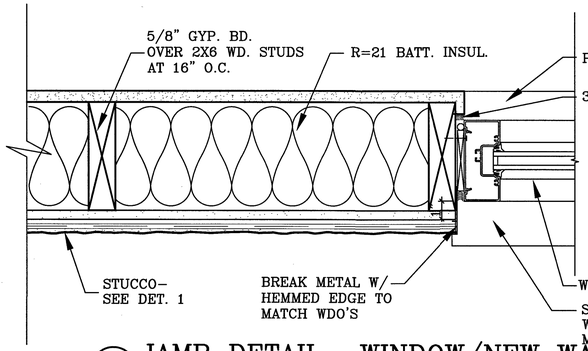

11 JAMB DETAIL– WINDOW/NEW WALL
3"=1'–0" (HEAD SIMILAR)

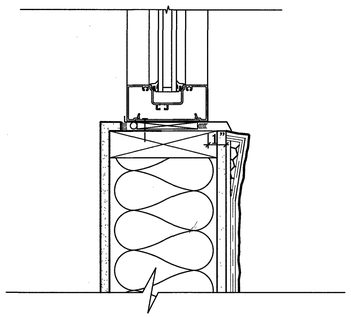

6 STUCCO ROWLOCK– WDO. SILL
SCALE: NTS.

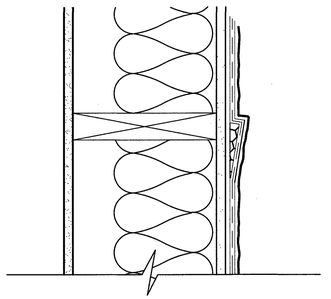

5 STUCCO ROWLOCK– NEW WALL
SCALE: NTS.

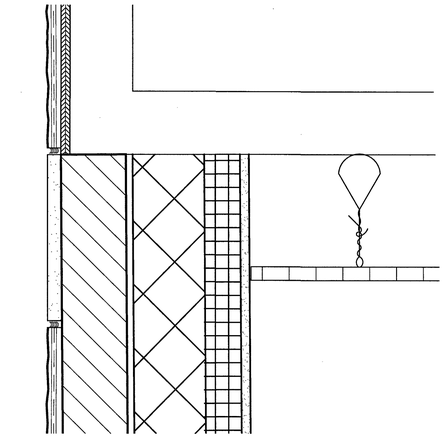

4 STUCCO– ROOF TRUSS
SCALE: NTS.

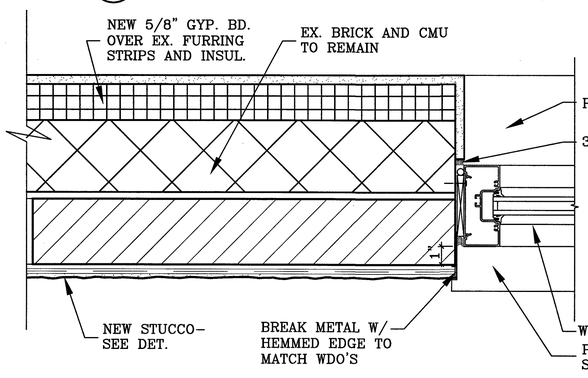

10 JAMB DETAIL– WINDOW/EX. WALL
3"=1'–0" (HEAD SIMILAR)

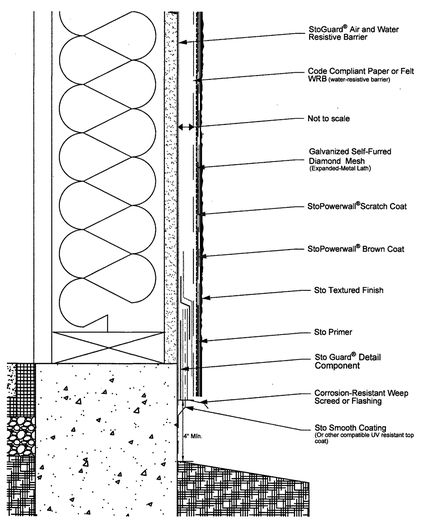

3 STUCCO AT GRADE TERMINATION
SCALE: NTS.

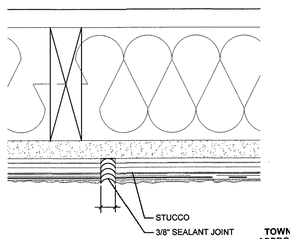

TOWN OF LA PLATA
APPROVED FOR ISSUE
THIS PLAN APPEARS TO COMPLY WITH THE CODE, BUT IT IS NOT THE AUTHORITY TO VIOLATE ANY CODE ANY CODE OR ORDINANCE. ALL WORK IS SUBJECT TO INSPECTION APPROVAL
KEEP THESE PLANS AT THE JOBSITE

2 STUCCO AT JOINT
SCALE: NTS.

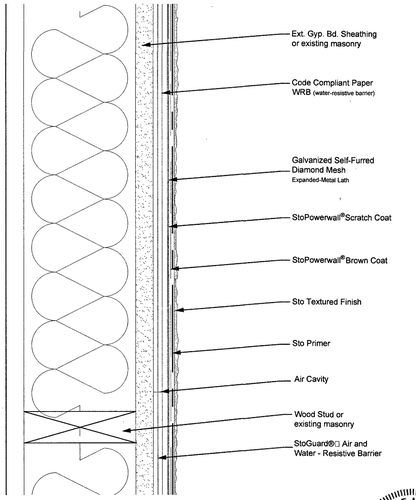

1 STUCCO AT TYPICAL WALL
SCALE: NTS.

"I CERTIFY THAT THESE DOCUMENTS WERE PREPARED OR APPROVED BY ME, AND THAT I AM A DULY LICENSED ARCHITECT UNDER THE LAWS OF THE STATE OF MARYLAND. LICENSE NUMBER 7959, EXPIRATION DATE DECEMBER 31, 2027"

REVISIONS

RENOVATION OF UNIVERSITY OF MARYLAND MEDICAL CENTER OFFICE BUILDING

616 CHARLES STREET
LA PLATA, MARYLAND 20646

COPYRIGHT R. LITTEN & ASSOCIATES, ARCHITECTS, LLC. NO PORTION OF THIS DRAWING MAY BE REPRODUCED, STORED OR TRANSMITTED BY ANY MEANS WITHOUT PRIOR WRITTEN PERMISSION FROM THE ARCHITECT.

R.L. LITTEN & ASSOCIATES, ARCHITECTS, LLC
300 CHARLES STREET, SUITE 4
P.O.BOX 1920, LAPLATA, MD 20646 (301) 934-1471
e-mail: rllitten.architect@verizon.net

KL
RL
3-27-26
25-41

513

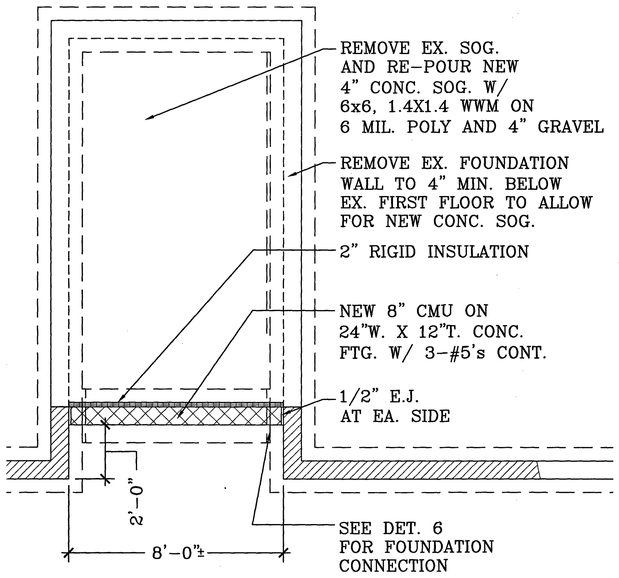

4 FOUNDATION PLAN-WEST SLOT

SCALE: 3/8" = 1'-0"

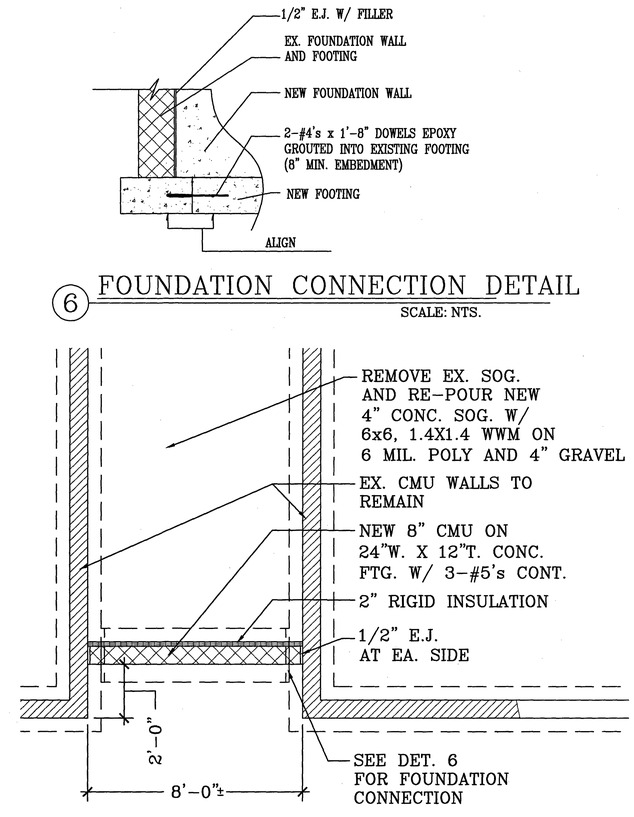

6 FOUNDATION CONNECTION DETAIL

SCALE: NTS.

3 FOUNDATION PLAN-EAST SLOT

SCALE: 3/8" = 1'-0"

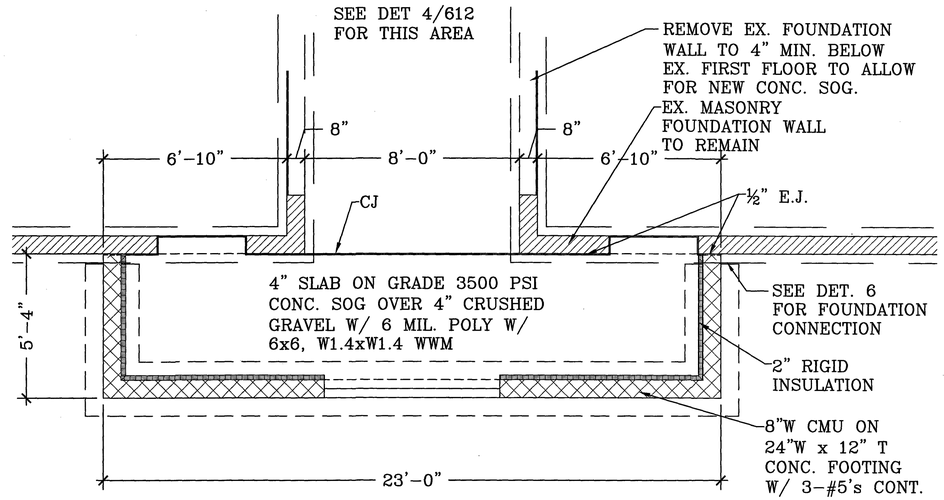

2 FOUNDATION PLAN-LOBBY

SCALE: 3/8" = 1'-0"

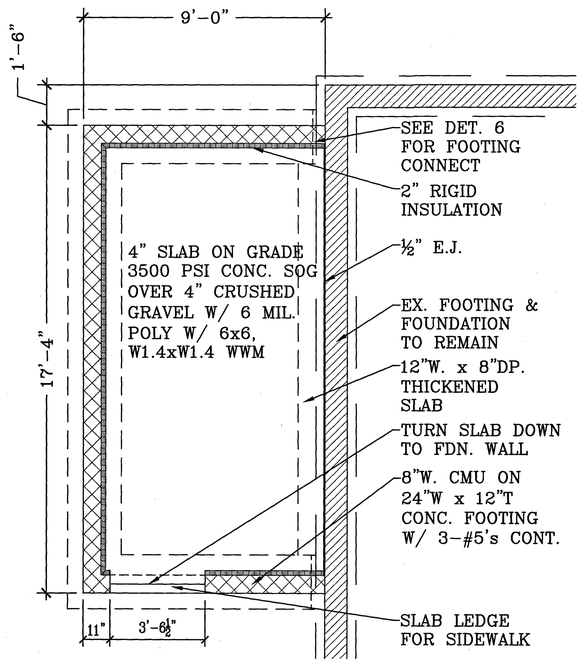

5 FOUNDATION PLAN-STAIR

SCALE: 3/8" = 1'-0"

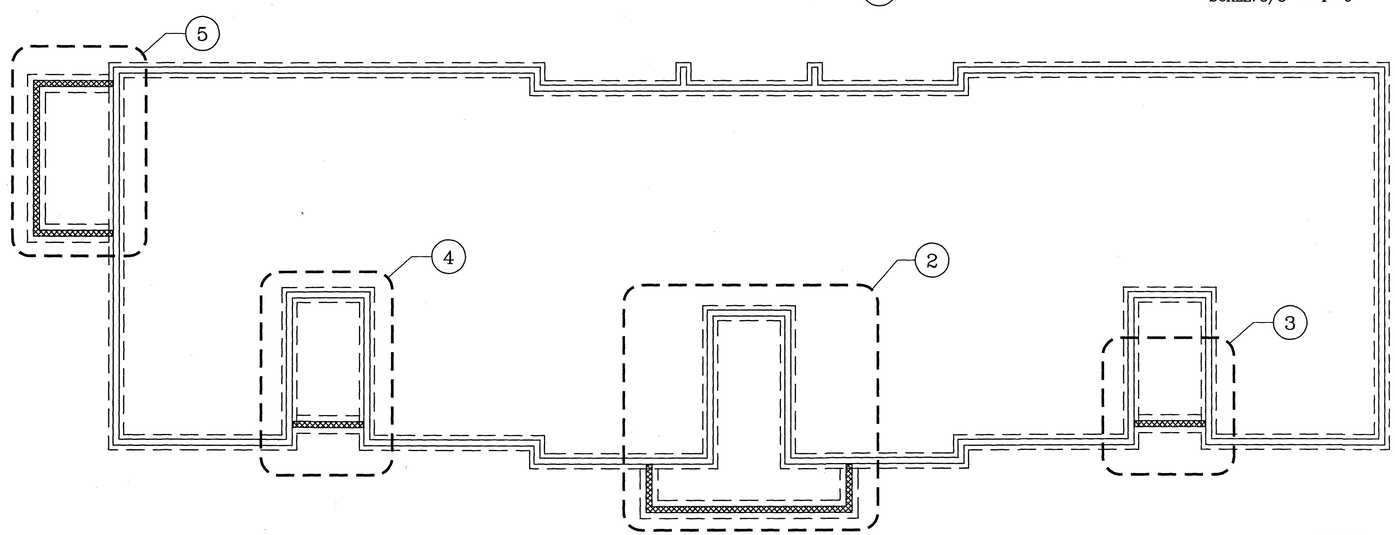

1 FOUNDATION PLAN-COMPOSITE

SCALE: 1/8" = 1'-0"

TOWN OF LA PLATA
APPROVED FOR ISSUE
THIS PLAN APPEARS TO COMPLY WITH THE CODE, BUT IT IS NOT THE AUTHORITY TO VIOLATE ANY CODE ANY CODE OR ORDINANCE ALL WORK IS SUBJECT TO INSPECTION APPROVAL
KEEP THESE PLANS AT THE JOBSITE

STATE OF MARYLAND
EDWARD JOHN REED
22648
PROFESSIONAL ENGINEER
3/12/2026

I hereby certify that this document was prepared or approved by me, and that I am a duly Licensed professional engineer under the laws of the State of Maryland. License No. 22648, Expiration Date: 3/15/2028.

EDWARD J. REED PE SECB
233 BAKE HOUSE LANDING
TAPPAHANNOCK, VA 22560-5617

REVISIONS

RENOVATION OF UNIVERSITY OF MARYLAND
MEDICAL CENTER OFFICE BUILDING
616 CHARLES STREET
LA PLATA, MARYLAND 20646

COPYRIGHT R. LITTEN & ASSOCIATES, ARCHITECTS, LLC. NO PORTION OF THESE DRAWINGS MAY BE REPRODUCED, STORED OR TRANSMITTED BY ANY MEANS WITHOUT PRIOR WRITTEN PERMISSION FROM THE ARCHITECT.

R.L. LITTEN & ASSOCIATES, ARCHITECTS, LLC
300 CHARLES STREET, SUITE 4
P.O.BOX 1920, LAPLATA, MD 20646 (301) 934-1471
e-mail: rlitten.architect@verizon.net

KL
RL
3-27-26
25-41

601

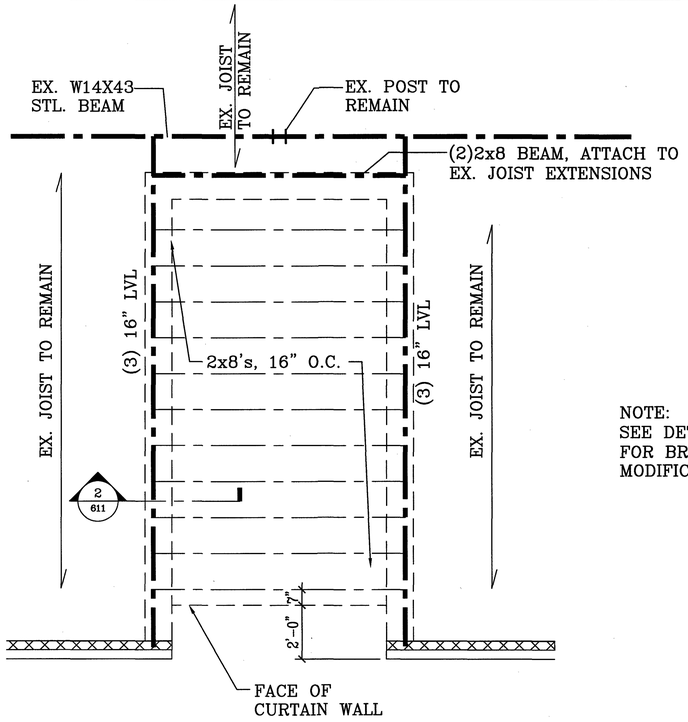

4 FLOOR FRAMING PLAN–WEST SLOT

SCALE: 3/8" = 1'-0"

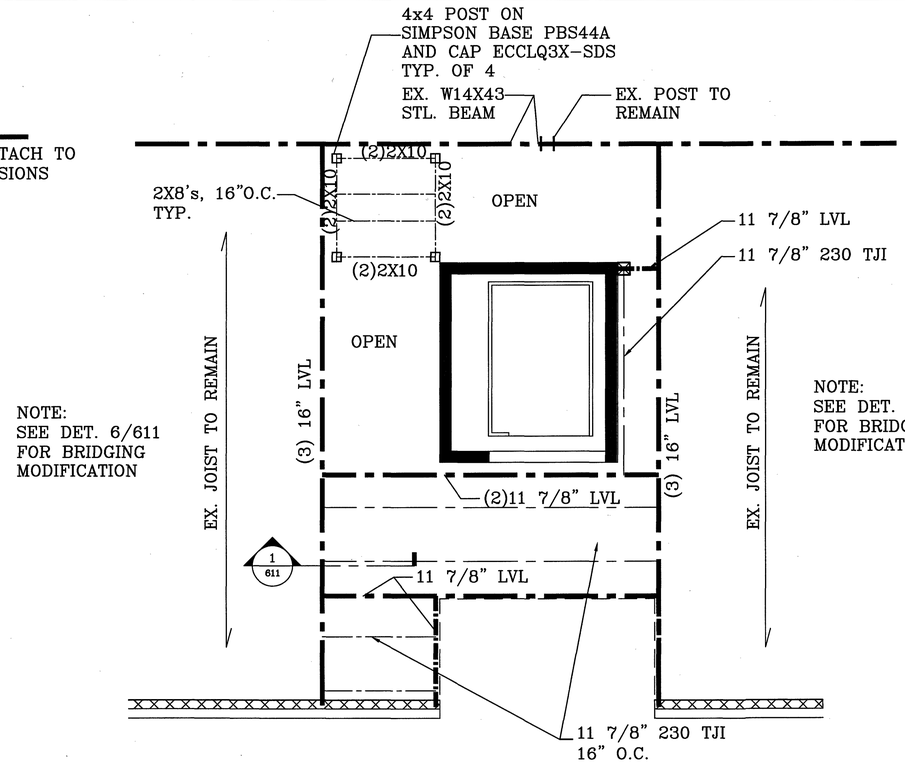

3 FLOOR FRAMING PLAN–LOBBY

SCALE: 3/8" = 1'-0"

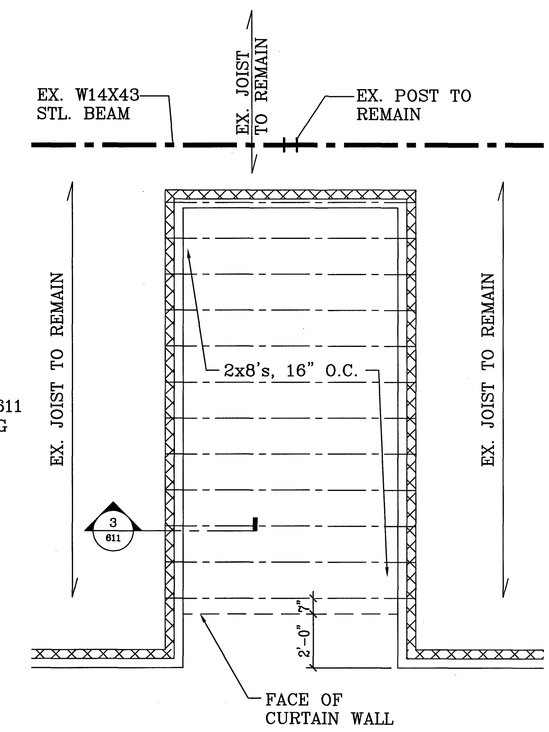

2 FLOOR FRAMING PLAN–EAST SLOT

SCALE: 3/8" = 1'-0"

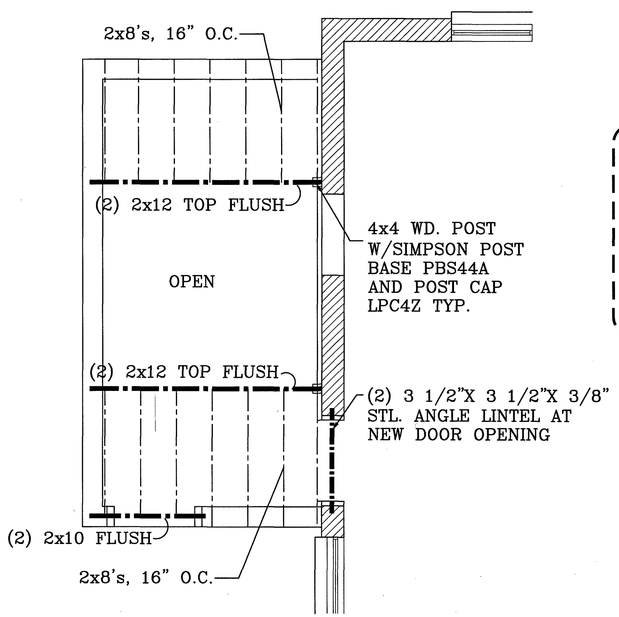

5 FLOOR FRAMING PLAN–STAIRS

SCALE: 3/8" = 1'-0"

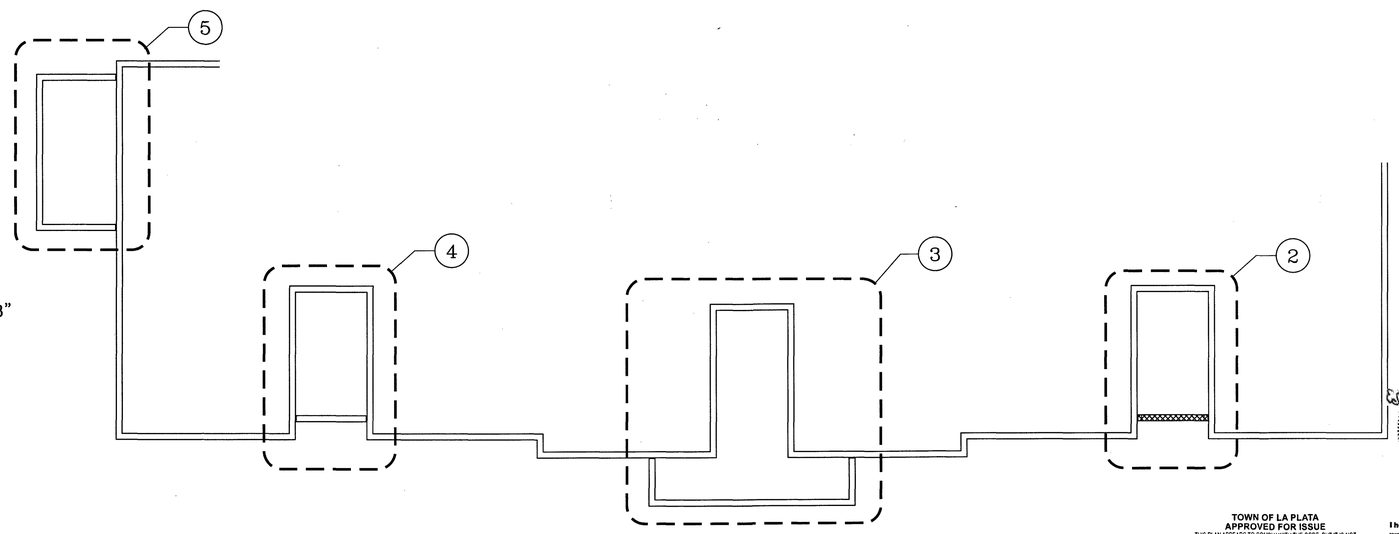

1 SECOND FLOOR FRAMING PLAN–COMPOSITE

SCALE: 1/8" = 1'-0"

TOWN OF LA PLATA
APPROVED FOR ISSUE
THIS PLAN APPEARS TO COMPLY WITH THE CODE, BUT IT IS NOT THE AUTHORITY TO VIOLATE ANY CODE OR ORDINANCE
ALL WORK IS SUBJECT TO INSPECTION APPROVAL
KEEP THESE PLANS AT THE JOBSITE

STATE OF MARYLAND
EDWARD JOHN REED
22648
PROFESSIONAL ENGINEER
3/12/2026

I hereby certify that this document was prepared or approved by me, and that I am a duly Licensed professional engineer under the laws of the State of Maryland. License No. 22648, Expiration Date: 3/15/2028.

EDWARD J. REED PE SECS
233 BAKE HOUSE LANDING
TAPPAHANNOCK, VA 22560-5517

REVISIONS

RENOVATION OF UNIVERSITY OF MARYLAND
MEDICAL CENTER OFFICE BUILDING
616 CHARLES STREET
LA PLATA, MARYLAND 20646

COPYRIGHT RL LITTEN & ASSOCIATES, ARCHITECTS, LLC. NO PORTION OF THIS DRAWING MAY BE REPRODUCED, STORED OR TRANSMITTED BY ANY MEANS WITHOUT PRIOR WRITTEN PERMISSION FROM THE ARCHITECT.

R.L. LITTEN & ASSOCIATES, ARCHITECTS, LLC
300 CHARLES STREET, SUITE 4
P.O.BOX 1920, LAPLATA, MD 20646 (301) 934-1471
e-mail: rllitten.architect@verizon.net

KL
RL
3-27-26
25-41

602

FRAMING SCHEDULE		
◯	DESCRIPTION	NOTES
1	2x PRE-ENG. GABLE TRUSSES, 24" o.c.	
2	2x PRE-ENG. OVER-FRAMING TRUSSES, 24" o.c.	
3	(2) 2x8 HEADER	
4	EX. ROOF TRUSSES TO REMAIN	
5	EX. BEAM TO REMAIN	

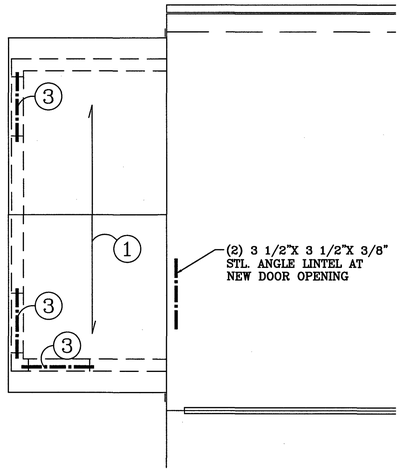

2 ROOF FRAMING PLAN- STAIRS

SCALE: 1/4" = 1'-0"

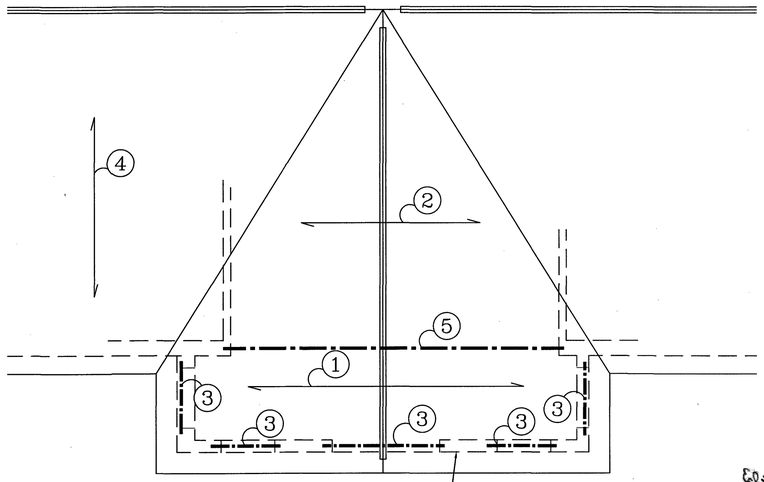

TOWN OF LA PLATA
APPROVED FOR ISSUE
THIS PLAN APPEARS TO COMPLY WITH THE CODE, BUT IT IS NOT THE AUTHORITY TO VIOLATE ANY CODE ANY CODE OR ORDINANCE. ALL WORK IS SUBJECT TO INSPECTION APPROVAL
KEEP THESE PLANS AT THE JOBSITE

1 ROOF FRAMING PLAN- LOBBY

SCALE: 1/4" = 1'-0"

STATE OF MARYLAND
EDWARD JOHN REED
22648
PROFESSIONAL ENGINEER
3/12/2026

I hereby certify that this document was prepared or approved by me, and that I am a duly Licensed professional engineer under the laws of the State of Maryland. License No. 22648, Expiration Date: 3/15/2028.

EDWARD J. REED PE SECS
233 BAKE HOUSE LANDING
TAPPAHANNOCK, VA 22560-5517

REVISIONS

RENOVATION OF UNIVERSITY OF MARYLAND
MEDICAL CENTER OFFICE BUILDING
616 CHARLES STREET
LA PLATA, MARYLAND 20646

COPYRIGHT R. LITTEN & ASSOCIATES, ARCHITECTS, LLC. NO PORTION OF THIS DRAWING MAY BE REPRODUCED, STORED OR TRANSMITTED BY ANY MEANS WITHOUT PRIOR WRITTEN PERMISSION FROM THE ARCHITECT.

R.L. LITTEN & ASSOCIATES, ARCHITECTS, LLC
300 CHARLES STREET, SUITE 4
P.O.BOX 1920, LAPLATA, MD 20646 (301) 934-1471
e-mail: rllitten.architect@verizon.net

KL
RL
3-27-26
25-41

603

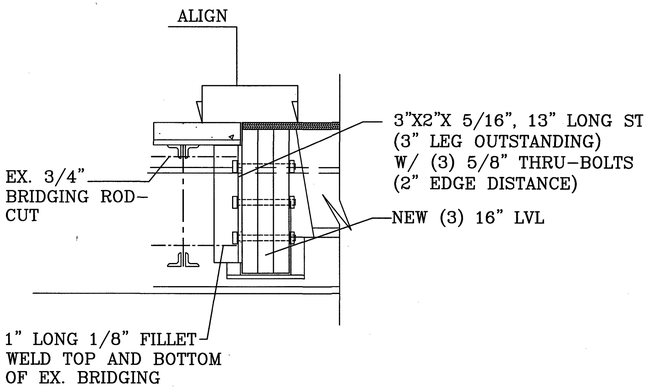

6 BRIDGING MODIFICATION DETAIL
SCALE: 1 1/2" = 1'-0"

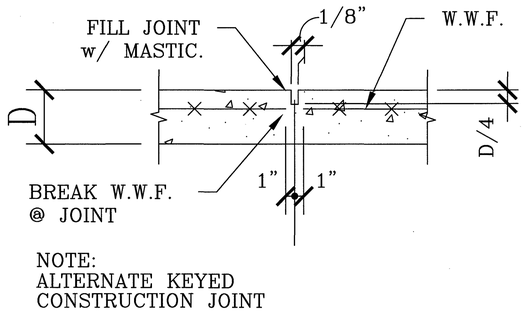

NOTE:
ALTERNATE KEYED
CONSTRUCTION JOINT

5 CONTROL JOINT DETAIL
SCALE: 1/2" = 1'-0"

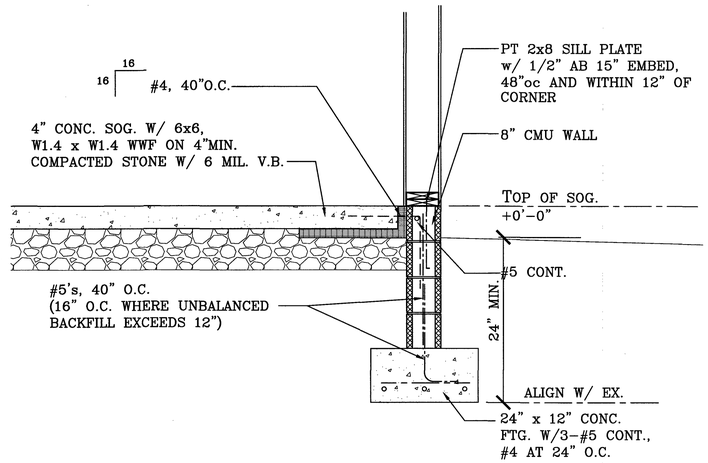

4 TYP. FOOTING DETAIL
SCALE: 3/4" = 1'-0"

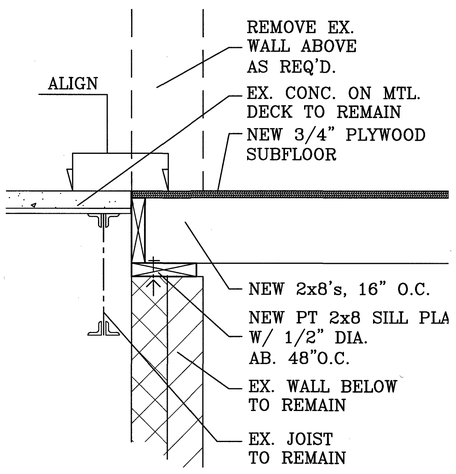

3 SECTION DETAIL AT EAST SLOT
SCALE: 1 1/2" = 1'-0"

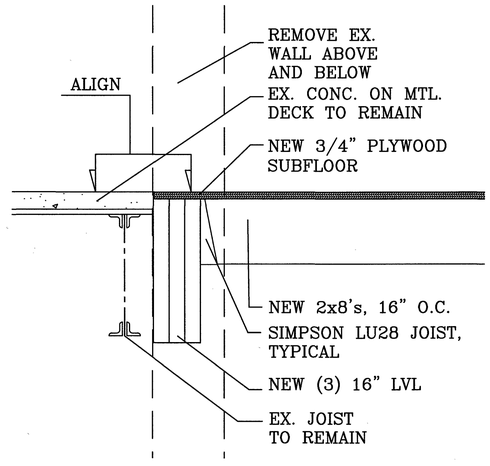

2 SECTION DETAIL AT WEST SLOT
SCALE: 1 1/2" = 1'-0"

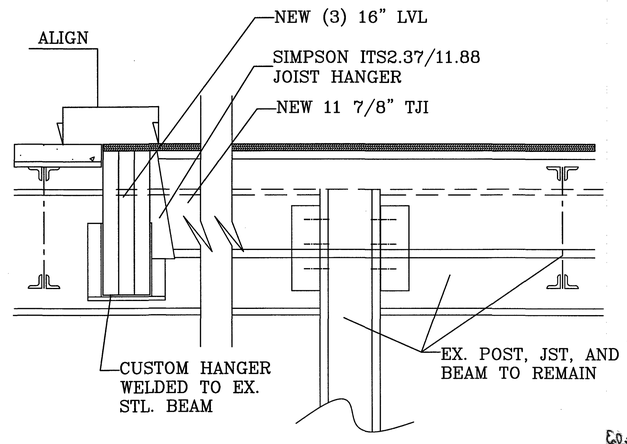

1 SECTION DETAIL AT LOBBY
SCALE: 1 1/2" = 1'-0"

TOWN OF LA PLATA
APPROVED FOR ISSUE
THIS PLAN APPEARS TO COMPLY WITH THE CODE, BUT IT IS NOT THE AUTHORITY TO VIOLATE ANY CODE ANY CODE OR ORDINANCE
ALL WORK IS SUBJECT TO INSPECTION APPROVAL
KEEP THESE PLANS AT THE JOBSITE

I hereby certify that this document was prepared or approved by me, and that I am a duly Licensed professional engineer under the laws of the State of Maryland, License No. 22648, Expiration Date: 3/15/2028.

EDWARD J. REED PE SECB
233 BAKE HOUSE LANDING
TAPPAHANNOCK, VA 22560-5517

STATE OF MARYLAND
EDWARD JOHN REED
22648
PROFESSIONAL ENGINEER
3/12/2026

REVISIONS

RENOVATION OF UNIVERSITY OF MARYLAND
MEDICAL CENTER OFFICE BUILDING
616 CHARLES STREET
LA PLATA, MARYLAND 20646

COPYRIGHT BY LITTEN & ASSOCIATES, ARCHITECTS, LLC. NO PORTION OF THIS DRAWING MAY BE REPRODUCED, STORED OR TRANSMITTED BY ANY MEANS WITHOUT PRIOR WRITTEN PERMISSION FROM THIS ARCHITECT.

R.L. LITTEN & ASSOCIATES, ARCHITECTS, LLC
300 CHARLES STREET, SUITE 4
P.O.BOX 1920, LAPLATA, MD 20646 (301) 934-1471
e-mail: rllitten.architect@verizon.net

KL
RL
3-27-26
25-41

611

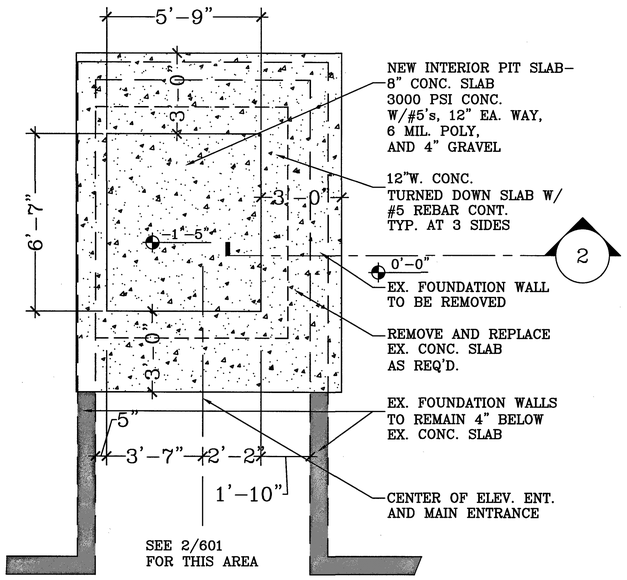

4 FOUNDATION PLAN- ELEVATOR
3/8"=1'-0"

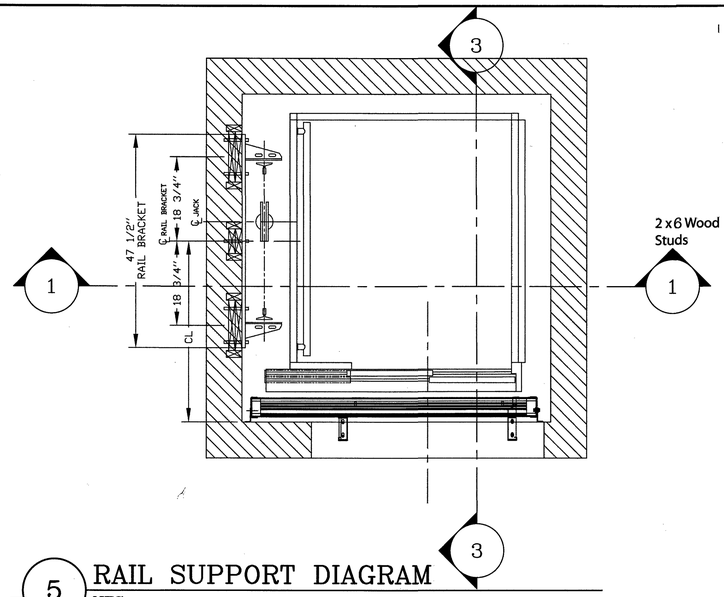

5 RAIL SUPPORT DIAGRAM
NTS.

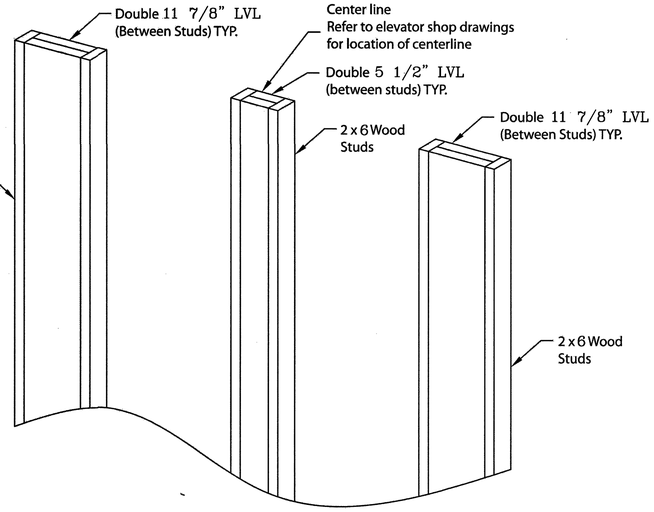

6 RAIL SUPPORT DIAGRAM
NTS.

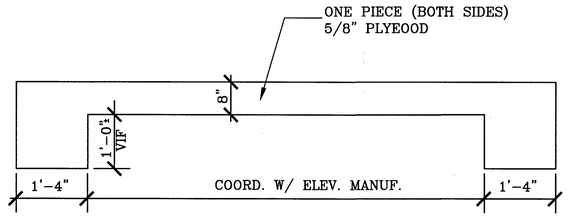

7 PLYWOOD PROFILE
3/4"=1'-0"

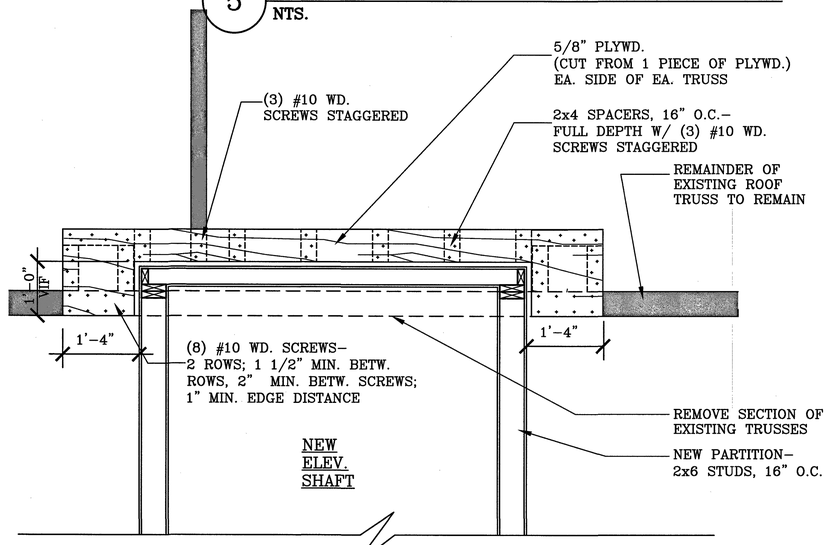

3 ROOF TRUSS MODIFICATION DETAIL
3/4"=1'-0"

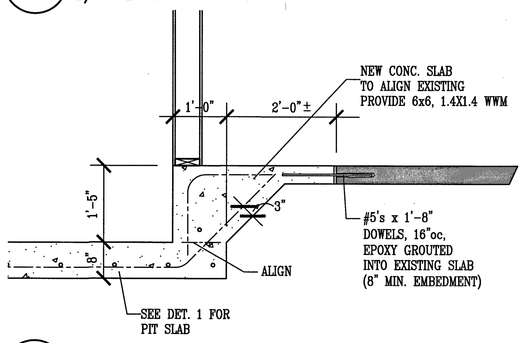

2 SLAB CONNECTION DETAIL
3/4"=1'-0"

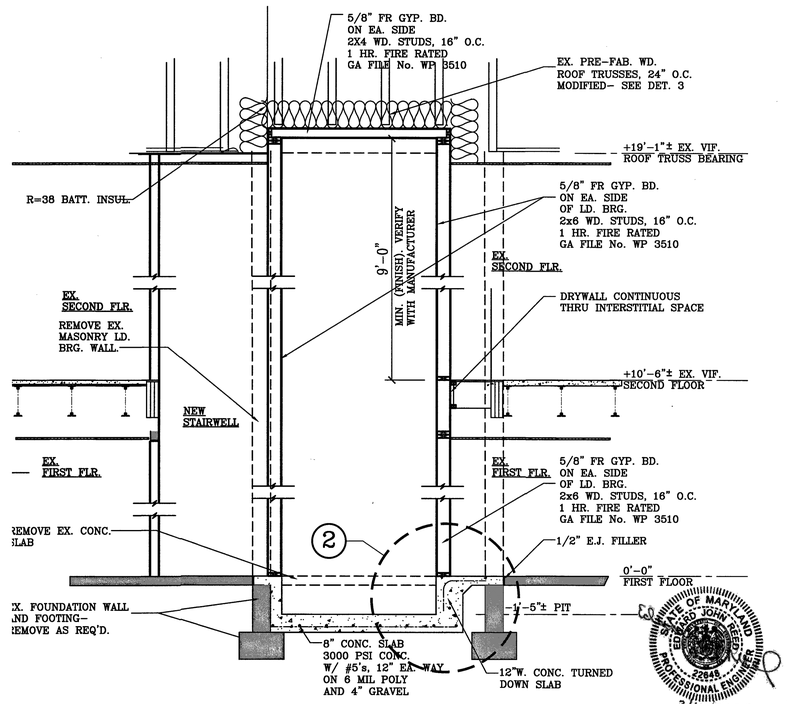

1 ELEVATOR PIT SECTION
3/8"=1'-0"

TOWN OF LA PLATA
APPROVED FOR ISSUE
THIS PLAN APPEARS TO COMPLY WITH THE CODE, BUT IT IS NOT THE AUTHORITY TO VIOLATE ANY CODE ANY CODE OR ORDINANCE
ALL WORK IS SUBJECT TO INSPECTION APPROVAL
KEEP THESE PLANS AT THE JOBSITE

I hereby certify that this document was prepared or approved by me, and that I am a duly licensed professional engineer under the laws of the State of Maryland. License No. 22645, Expiration Date: 3/15/2028.

EDWARD J. REED PE SECB
233 BAKE HOUSE LANDING
TAPPAHANNOCK, VA 22560-5517

REVISIONS

RENOVATION OF UNIVERSITY OF MARYLAND
MEDICAL CENTER OFFICE BUILDING
616 CHARLES STREET
LA PLATA, MARYLAND 20646

COPYRIGHT R. LITTEN & ASSOCIATES, ARCHITECTS, LLC. NO PORTION OF THIS DRAWING MAY BE REPRODUCED, STORED OR TRANSMITTED BY ANY MEANS WITHOUT PRIOR WRITTEN PERMISSION FROM THE ARCHITECT.

R.L. LITTEN & ASSOCIATES, ARCHITECTS, LLC
300 CHARLES STREET, SUITE 4
P.O.BOX 1920, LAPLATA, MD 20646 (301) 934-1471
e-mail: rllitten.architect@verizon.net

KL
RL
3-27-26
25-41

612

MECHANICAL NOTES

DIVISION 23 HEATING VENTILATION AND AIR CONDITIONING (HVAC)

23-0000 GENERAL REQUIREMENTS

SCOPE AND DRAWINGS

1. CONTRACTOR SHALL REFER TO ALL DRAWINGS AND SPECIFICATIONS IN THIS PACKAGE SUCH AS ARCHITECTURAL, STRUCTURAL, ELECTRICAL, AND PLUMBING. FULLY COORDINATE WITH ALL OTHER TRADES, OWNER, AND ARCHITECT REQUIREMENTS. ALL THE ABOVE-MENTIONED DRAWINGS AND SPECIFICATIONS ARE CONSIDERED A PART OF THE CONTRACT DOCUMENTS.
2. CONTRACTOR SHALL INSPECT THE SITE BEFORE SUBMITTING BID AND MAKE ALLOWANCES FOR ALL VISIBLE, SPECIFIED, OR REASONABLY ANTICIPATED FIELD CONDITIONS. SIGNIFICANT DISCREPANCIES FROM THE DRAWINGS, EXISTING SITE CONDITIONS, SPECIFICATIONS, OR OTHER TRADE CONFLICTS SHALL BE IMMEDIATELY BROUGHT TO THE ATTENTION OF THE OWNER, ARCHITECT AND ENGINEER IN WRITING PRIOR TO SUBMITTAL OF BID. NO ADDITIONAL COMPENSATION WILL BE MADE TO THE CONTRACTOR AS A RESULT OF HIS FAILURE TO FAMILIARIZE HIMSELF WITH THE EXISTING CONDITIONS UNDER WHICH THE WORK MUST BE PERFORMED.
3. THE DRAWINGS ARE DIAGRAMMATIC IN NATURE AND INDICATE THE GENERAL LOCATION AND INTENT OF THE SYSTEMS. DRAWINGS DO NOT INDICATE EVERY FITTING, ELBOW, OFFSET, VALVE, AND OTHER COMPONENTS NECESSARY TO INSURE PROPER INSTALLATION OF A WORKING SYSTEM. CONTRACTOR SHALL PROVIDE ALL NECESSARY FITTINGS, ACCESSORIES, AND AUXILIARY ITEMS TO INSTALL COMPLETE EQUIPMENT INSTALLATIONS AND SYSTEMS AS DIAGRAMMED.
4. DRAWINGS AND SPECIFICATIONS ARE INTENDED TO SUPPLEMENT EACH OTHER, WHEN IN CONFLICT, THE STRICTEST PROVISION SHALL GOVERN. IF ONE IS MISSING MATERIAL OR LABOR SCOPE, CONTRACTOR SHALL PROVIDE AS IF IT IS MENTIONED IN BOTH.
5. CONTRACTOR SHALL PROVIDE AND INSTALL ALL WORK EQUIPMENT AND MATERIALS AS INDICATED ON THE PROJECT DRAWINGS AND SPECIFICATIONS TO PROVIDE A COMPLETELY OPERATIONAL SYSTEM.
6. PROVIDE ALL SUPERVISION, LABOR, MATERIALS, EQUIPMENT MISCELLANEOUS ITEMS, SERVICES AND ACCESSORIES REQUIRED BY STANDARD INDUSTRY PRACTICE FOR SUCH INSTALLATIONS, AND FOR THE SAFE AND CORRECT OPERATION OF THE ENTIRE INSTALLATION.
7. PRODUCTS SHALL BE INSTALLED IN ACCORDANCE WITH MANUALS, GUIDELINES, OR INSTRUCTIONS FURNISHED BY THE PRODUCT MANUFACTURER.
8. COMPETENT MECHANICS AND SUBCONTRACTORS USING PROPER TOOLS AND EQUIPMENT SHALL PERFORM ALL WORK TO PRODUCE FIRST-QUALITY INSTALLATIONS. ALL WORK SHALL BE NEATLY INSTALLED, ACCESSIBLE FOR MAINTENANCE, AND COMPLETE WITH ALL ACCESSORIES.
9. COORDINATE ALL WORK WITH OTHER TRADES TO ENSURE ALL SYSTEMS FIT IN GIVEN SPACE, SUCH AS ABOVE CEILINGS. ALL CEILING HEIGHTS INDICATED ON ARCHITECTURAL AND/OR INTERIOR DESIGN DRAWINGS AS WELL AS MINIMUM CLEARANCES REQUIRED BY LOCAL CODES SHALL BE MAINTAINED THROUGHOUT THE BUILDING.

APPLICABLE CODES

1. ALL WORK AND EQUIPMENT SHALL BE INSTALLED AND COMPLY WITH THE LOCAL CODES. THE CONTRACTOR SHALL COMPLY WITH THE LAWS, ORDINANCES, RULES, AND REGULATIONS OF ALL GOVERNMENTAL AND PUBLIC UTILITY AUTHORITIES HAVING JURISDICTION OF ANY OF THE SYSTEMS SPECIFIED.
2. ALL WORK SHALL CONFORM TO LOCAL AND STATE CODES AND TO APPLICABLE STATE LAWS AND, INCLUDING, BUT NOT LIMITED TO NATIONAL ELECTRIC CODE, IMC, IPC, IECC AND NFPA CODES. WHERE CODE REQUIRES A VARIATION FROM SPECIFIC INFORMATION IN CONTRACT DOCUMENTS, CONTRACTOR SHALL INCLUDE WORK REQUIRED TO COMPLY WITH CODE. CERTAIN CODE-REQUIRED ITEMS ARE MENTIONED IN THESE CRITERIA FOR EMPHASIS OR EXAMPLE ONLY. IDENTIFICATION AND COMPLIANCE WITH ALL APPLICABLE CODES AND REGULATIONS ARE THE CONTRACTOR'S RESPONSIBILITY.
3. CONTRACTORS SHALL BE LICENSED IN ACCORDANCE WITH LOCAL AND STATE LAWS AND OBTAIN, PAY FOR, AND INCLUDE INMU BID PRICE ALL APPLICABLE PERMITS AND CERTIFICATES OF INSPECTION.
4. ALL WORK SHALL BE DONE IN ACCORDANCE WITH THE REQUIREMENTS OF THE OWNER'S INSURANCE CARRIER, INDUSTRY PRACTICE STANDARDS AND THE AMERICANS WITH DISABILITIES ACT (ADA). ADDITIONALLY, FOOD SERVICE FACILITIES MUST ADHERE TO THE PERTINENT DEPARTMENT OF HEALTH REGULATIONS, SANITARY CODES, AND ALL OTHER APPLICABLE CODES, LAWS, REGULATIONS AND DIRECTIVES.

GENERAL

1. CONTRACTOR SHALL BE RESPONSIBLE FOR CONSTRUCTION MEANS, METHODS, SEQUENCES, AND WORKMAN SAFETY.
2. COORDINATE SEQUENCING OF INSTALLATION, PHASING OF EQUIPMENT DEMOLITION, SCHEDULE OF WORK, UTILITY SHUTDOWNS, PARKING, MATERIAL STAGING AND OTHER POTENTIALLY DISRUPTIVE ACTIVITIES WITH BUILDING MANAGEMENT.
3. THE DESIGN AND APPEARANCE OF ALL EXPOSED DUCTWORK AND PIPING WHICH ARE VISIBLE FROM THE PUBLIC AREAS ARE CRITICAL TO THE OVERALL VISUAL EFFECT AND ARE SUBJECT TO DETAILED REVIEW AND APPROVAL BY THE OWNER.
4. ALL PIPING, CONDUIT AND DUCTWORK IS TO BE INSTALLED AS HIGH AS REASONABLY POSSIBLE. PRIOR TO THE START OF ANY WORK, OWNER'S STRUCTURAL ENGINEER, AT CONTRACTOR'S COST, MUST APPROVE ALL HOLES THROUGH STRUCTURAL MEMBERS OR SLABS.
5. PIPING AND DUCTWORK SHALL BE INSTALLED CONCEALED ABOVE CEILINGS UNLESS OTHERWISE NOTED. PIPING SHALL BE INSTALLED AS DIRECT AS POSSIBLE WITHOUT UNNECESSARY BENDS OR OFFSETS.
6. PIPING, DUCTWORK, WIRING, SHALL NOT BE INSTALLED OR ROUTED ABOVE OR BELOW ELECTRICAL PANELS AND EQUIPMENT, THROUGH ELEVATOR EQUIPMENT ROOMS, ELEVATOR SHAFTS, OR STAIRWAYS UNLESS THESE ITEMS SERVE THESE AREAS ONLY.
7. CONNECTIONS BETWEEN DISSIMILAR PIPING METALS SHALL BE MADE WITH SUITABLE DIELECTRIC UNIONS.
8. ALL PIPE AND DUCTS SHALL BE STORED WITH CAPS OR COVERINGS IN PLACE UNTIL INSTALLED. OPEN ENDS OF INSTALLED PIPES AND DUCTS SHALL HAVE SIMILAR CAPS OR COVERINGS.
9. CONFIRM UTILITY COMPANY REQUIREMENTS AND CONNECTION POINTS IN THE FIELD PRIOR TO STARTING WORK. CONTRACTOR SHALL BE RESPONSIBLE FOR MEETING WITH THE LOCAL METER INSPECTOR PRIOR TO COMMENCING WORK AND COORDINATE UTILITY ROUTING, CONNECTION POINTS, AND REQUIREMENTS.
10. IN CASE OF PARTIAL OCCUPANCY OF BUILDING, PERFORM THOSE ITEMS SPECIFICALLY MENTIONED AND OTHER ACTIVITIES THAT PRODUCE OBJECTIONABLE NOISE IN A MANNER PRESCRIBED BY OWNER AND IN A MANNER THAT DOES NOT INTERFERE WITH THE USE OF THE EXISTING FACILITY.
11. OWNER IS RESPONSIBLE FOR ASBESTOS AND ANY OTHER HAZARDOUS MATERIALS. SHOULD ANY BE DISCOVERED THAT HAS NOT BEEN REMOVED, DELAY WORK IN AFFECTED AREA AND CONTACT OWNER FOR DIRECTION.
12. CONTRACTOR SHALL REFER TO ARCHITECTURAL PLANS FOR APPROVED FLOOR PLAN DIMENSIONS AND EXACT COMPONENT LOCATIONS. DO NOT SCALE ENGINEERING DRAWINGS.

CUTTING, DRILLING, AND PATCHING

1. ALL CUTTING AND REPAIRING NECESSARY TO THE EXECUTION OF THIS WORK SHALL BE DONE AND REPAIRED BY CONTRACTOR. ALL OPENINGS IN FIRE RATED ENCLOSURES SHALL BE FIRE STOPPED. ALL OPENINGS SHALL BE FINISHED WITH NEAT TRIM OR FLANGES. PATCH AND FINISH AREAS DAMAGED AS A RESULT OF NEW OPENINGS TO MATCH ADJACENT EXISTING AREAS.
2. ALL OPENINGS SHALL BE NEATLY SAW CUT, CORE-BORED, SLEEVED, GROUTED, SEALED, AND MADE WATER AND FIREPROOF.
3. CONTRACTOR SHALL OBTAIN WRITTEN STRUCTURAL ENGINEER APPROVAL BEFORE DRILLING OR CUTTING STRUCTURAL COMPONENTS.
4. SEAL ALL OPENINGS AND PENETRATIONS THROUGH FIRE RATED WALLS AND PARTITIONS WITH FIRE RESISTANT SEALANT THAT WILL PREVENT THE PASSAGE OF FIRE AND SMOKE. SEALANT SHALL HAVE RATING EQUAL OR GREATER TO PENETRATED WALL. REFER TO 23 0507, FIRESTOPPING.
5. REFER TO ARCHITECTURAL DRAWINGS FOR EXACT EQUIPMENT LOCATIONS BEFORE CUTTING.
6. ALL ROOF PENETRATIONS SHALL BE COMPLETED BY ROOFER OF RECORD SO AS NOT TO VOID THE WARRANTY.

EXISTING CONDITIONS:

1. WHEN EXISTING WORK IS REMOVED, PIPES AND CONDUITS SHALL BE REMOVED, INCLUDING HANGERS, TO A POINT BELOW FINISHED FLOORS OR BEHIND FINISHED WALLS AND CAPPED. SUCH POINT SHALL BE FAR ENOUGH BEHIND FINISHED SURFACES TO ALLOW FOR INSTALLATION OF NORMAL THICKNESS OF REQUIRED FINISH MATERIAL. EQUIPMENT SHALL BE REMOVED AND NOT ABANDONED IN PLACE UNLESS OTHERWISE NOTED. AS REQUESTED BY OWNER, EXISTING EQUIPMENT SHALL REMAIN THEIR PROPERTY AND BE DELIVERED TO THEM ON THE PREMISES WHERE DIRECTED. ALL OTHER MATERIALS AND EQUIPMENT THAT ARE REMOVED SHALL BECOME PROPERTY OF THE CONTRACTOR AND SHALL BE PROMPTLY REMOVED AND DISPOSED OF IN AN APPROVED MANNER.
2. REFER TO 23 5040, HVAC DEMOLITION, FOR REMOVAL AND HANDLING OF REFRIGERANT AND EQUIPMENT CONTAINING REFRIGERANT.
3. REFER TO 23 5040, HVAC DEMOLITION, FOR REMOVAL OF EXISTING ABANDONED EQUIPMENT.
4. WHEN WORK SPECIFIED CONNECTS TO EXISTING EQUIPMENT, PERFORM ALL NECESSARY ALTERATIONS, CUTTINGS, FITTINGS, ETC., OF EXISTING WORK AS MAY BE NECESSARY TO MAKE SATISFACTORY CONNECTIONS BETWEEN NEW AND EXISTING WORK, AND TO LEAVE COMPLETED WORK IN A FINISHED AND WORKMANLIKE CONDITION.
5. WHEN THE WORK REQUIRES RELOCATION OF EXISTING EQUIPMENT, PERFORM ALL WORK AND MAKE NECESSARY CHANGES TO THE EXISTING CONDITIONS AS REQUIRED TO LEAVE THE RELOCATED EQUIPMENT IN A FINISHED AND WORKMANLIKE CONDITION. WHERE EXISTING INSULATION IS DISTURBED, REPLACE INSULATION WHERE REMOVED OR DAMAGED EQUAL TO EXISTING, IN TYPE, THICKNESS, AND R VALUE.
6. EXISTING EQUIPMENT HAS NOT BEEN TESTING FOR FUNCTIONALITY OR PERFORMANCE. WHERE EXISTING EQUIPMENT IS TO BE REUSED, CONTRACTOR SHALL ALLOW FOR REASONABLE CHECKING, ADJUSTMENT AND MINOR REPAIR TO RESTORE FULL FUNCTION AND PERFORMANCE. WORK WHICH IS REQUIRED AND WHICH IS BEYOND THAT DESCRIBED ABOVE OR ON THE PLANS SHALL BE BROUGHT TO THE ATTENTION OF THE OWNER, ARCHITECT, AND ENGINEER.

SITE PROTECTION AND CLEAN UP

1. CONTRACTOR SHALL PROVIDE FOR HIS OWN CLEAN UP, REMOVAL, AND DISPOSAL OF DAILY TRASH. CONTRACTOR SHALL KEEP CLEAN AND MAINTAIN WORK AREAS.
2. THE CONTRACTOR SHALL BE RESPONSIBLE FOR THE PROTECTION OF HIS OWN WORK, MATERIALS, AND OTHER BELONGINGS FROM DAMAGE.
3. THE CONTRACTOR SHALL BE RESPONSIBLE FOR PROTECTING ALL OWNER'S PROPERTY IN THE WORK AREA. ALL MATERIALS THAT CAN BE DAMAGED BY TEMPERATURE OR HUMIDITY EXCURSIONS SHALL BE REMOVED FROM THE WORK AREA AND STORED IN AN AIR-CONDITIONED ENVIRONMENT.
4. THE ROOF SURROUNDING THE WORK AREA WHERE EQUIPMENT IS TO BE DEMOLISHED OR INSTALLED SHALL BE PROTECTED WITH 1-INCH INSULATION BOARD COVERED BY 0.5-INCH PLYWOOD. SEAMS OF THE BOARD AND PLYWOOD SHALL BE STAGGERED SO NO ROOF MEMBRANE IS EXPOSED. FOLLOWING THE COMPLETION OF THE WORK, ALL DEBRIS SHALL BE CAREFULLY REMOVED FROM THE ROOF PRIOR TO REMOVAL OF THE ROOF PROTECTION.
5. PROVIDE TEMPORARY HEATERS AND AIR CONDITIONING EQUIPMENT, WHERE REQUIRED, TO MAINTAIN WORKING TEMPERATURES. DO NOT USE INSTALLED HVAC SYSTEMS FOR CONDITIONING DURING CONSTRUCTION.

SUBMITTALS

1. CONTRACTOR SHALL SUBMIT SHOP DRAWINGS, CATALOG CUTS OR CERTIFIED PRINTS COVERING ITEMS OF MECHANICAL AND ELECTRICAL EQUIPMENT, INCLUDING BUT NOT LIMITED TO, THE FOLLOWING:

DIFFUSERS AND GRILLES	UNIT HEATERS
ROOF CURB & MOUNTING METHODS	HVAC BALANCING REPORT
HEATING & AIR CONDITIONING EQUIPMENT	LOUVERS
SHEET METAL SHOP DRAWINGS & STANDARDS	PUMPS, BOOSTER CONTROLS
AUTOMATIC CONTROLS & SEQUENCES	FANS
EXPOSED PIPING DETAILS	ALL OTHER MECHANICAL EQUIPMENT
MECHANICAL INSULATION	

2. CONTRACTOR SHALL CLEARLY INDICATE CHARACTERISTICS ON EACH REQUIRED SUBMITTAL AND CERTIFY THAT THE EQUIPMENT AND MATERIALS REPRESENTED BY THE SUBMITTALS ARE IN COMPLIANCE WITH CONTRACT DOCUMENTS.
3. SUBMITTALS WILL BE REVIEWED BY THE ENGINEER FOR GENERAL COMPLIANCE WITH THE CONTRACT DOCUMENTS. SUBMITTAL REVIEW SHALL NOT RELIEVE THE CONTRACTOR OF COMPLIANCE WITH CONTRACT DOCUMENTS.
4. VERIFY ALL ELECTRICAL REQUIREMENTS FOR EQUIPMENT BEFORE ISSUING SUBMITTALS.
5. EQUIPMENT SHALL BE AS SCHEDULED AND MEET ALL REQUIREMENTS AND PERFORMANCE LISTED IN SCHEDULES. MANUFACTURERS LISTED ARE BASIS OF DESIGN. SUBSTITUTIONS ARE SUBJECT TO OWNER AND ENGINEER'S APPROVAL. IT IS THE CONTRACTOR'S RESPONSIBILITY TO RE-EVALUATE ANY SUBSTITUTED EQUIPMENT, AND REDESIGN AS NEEDED IN ORDER TO COORDINATE THE SUBSTITUTION WITH THE SYSTEM AND CERTIFY THAT THE SUBSTITUTION IS EQUIVALENT TO BASIS OF DESIGN.

RECORD DRAWINGS

MAINTAIN RECORD SET OF PLANS AS WORK PROGRESSES, SHOWING ADDITIONS AND SUBSTITUTIONS FROM DESIGN AND CONCEALED WORK. CONTRACTOR SHALL FURNISH RECORD SET OF DRAWINGS TO OWNER WITHIN 90 DAYS OF SYSTEM ACCEPTANCE. RECORD SET SHALL BE COMPLETED INAUTODESK AUTOCAD AND NEAT PDF FILE WITH MARK-UPS IN RED.

CLOSEOUT & WARRANTY

1. UPON COMPLETION OF WORK, THE CONTRACTOR SHALL REMOVE ALL DEBRIS AND UNUSED MATERIALS AND THOROUGHLY CLEAN THE CONTRACT AREA. REPLACE ALL SYSTEM AIR FILTERS PRIOR TO BALANCING. PROVIDE ONE SPARE SET OF AIR FILTERS FOR EACH PIECE OF EQUIPMENT TO OWNER.
2. ALL SYSTEMS, DEVICES AND RELATED ITEMS SHALL BE TESTED IN PLACE ON SITE. REPLACE ALL DEFECTIVE DEVICES, ITEMS OR SYSTEMS AT CONTRACTOR'S OWN EXPENSE BEFORE COMPLETION OF THE PROJECT. REPORT ANY PROBLEMS WITH EXISTING TO REMAIN (ETR) ITEMS TO OWNER FOR RESOLUTION.
3. PROVIDE OWNER WITH ONE BOUND COPY AND ONE PDF FILE OF ALL EQUIPMENT MANUFACTURER'S INSTALLATION, OPERATION AND MAINTENANCE MANUALS, TEST AND BALANCE REPORTS, RECORD DRAWINGS EQUIPMENT SUBMITTALS, PARTS DIAGRAMS, AND OTHER MATERIALS RECEIVED OR PRODUCED DURING CONSTRUCTION.
4. PROVIDE AT LEAST ONE DAY OF TRAINING TO OWNER'S PERSONNEL IN OPERATION OF EQUIPMENT AND PREVENTATIVE MAINTENANCE REQUIRED FOR EACH SYSTEM. ALL TRAINING SHALL BE VIDEO RECORDED. PROVIDE ONE DVD OF THE RECORDED TRAINING, AS WELL AS CLOUD-BASED FILE STORAGE.
5. ALL WORK SHALL BE GUARANTEED AGAINST DEFECTS OF MATERIAL AND/OR WORKMANSHIP FOR A PERIOD OF ONE YEAR AFTER ACCEPTANCE OF THE WORK BY THE OWNER FOR THE BENEFICIAL USE THEREOF. THE CONTRACTOR WILL REMEDY ANY DEFECTS AND ANY DAMAGE RESULTING FROM THE WORK THAT OCCURS WITHIN THE PERIOD NAMED ABOVE.
6. REPAIR OR REPLACE WITHOUT MATERIAL AND LABOR CHARGE TO THE OWNER ALL ITEMS FOUND DEFECTIVE DURING THE WARRANTY PERIODS. IN THE CASE OF REPLACEMENT OR REPAIR DUE TO FAILURE WITHIN THE WARRANTY PERIOD, THE WARRANTY ON THAT PORTION OF THE WORK SHALL BE EXTENDED FOR A MINIMUM PERIOD OF ONE YEAR FROM THE DATE OF SUCH REPLACEMENT OR REPAIR.

MECHANICAL ABBREVIATIONS

ABBREVIATION	DESCRIPTION
Ø OR DIA	DIAMETER
A/C	AIR CONDITIONING
ACU	AIR CONDITIONING UNIT
AFF	ABOVE FINISHED FLOOR
AHU	AIR HANDLING UNIT
AP	ACCESS PANEL
BDD	BACK DRAFT DAMPER
BHP	BREAK HORSE POWER
BTUH	BRITISH THERMAL UNITS PER HOUR
∮ OR CFM	CUBIC FEET PER MINUTE
CX	CONNECT TO EXISTING
D-1	DIFFUSER WITH DESIGNATOR NUMBER
DIA	DIAMETER
DB	DRY BULB
DX	DIRECT EXPANSION
EA	EXHAUST AIR
EAT	ENTERING AIR TEMPERATURE
EF	EXHAUST FAN
ESP	EXTERNAL STATIC PRESSURE
ETR	EXISTING TO REMAIN
EX	EXISTING
F	FAHRENHEIT
FCU	FAN COIL UNIT
FPM	FEET PER MINUTE
G-1	GRILLE W/ DESIGNATION NUMBER
GAL	GALLONS
GPM	GALLONS PER MINUTE
HP	HORSE POWER
HP-1	HEAT PUMP UNIT DESIGNATION
KEF	KITCHEN EXHAUST FAN
KW	KILOWATT
MAU	MAKE-UP AIR UNIT
MBH	1000 BTU/HR
MCA	MINIMUM CIRCUIT AMPACITY
MOCP	MAXIMUM OVERCURRENT PROTECTION
MOD	MOTOR OPERATED DAMPER
NIC	NOT IN CONTRACT
NTS	NOT TO SCALE
OA	OUTSIDE AIR
PSIG	POUNDS PER SQUARE INCH-GAGE
PSF	POUNDS PER SQUARE FOOT
RA	RETURN AIR
RH	RELATIVE HUMIDITY
RPM	REVOLUTIONS PER MINUTE
RTU	ROOFTOP UNIT
RX	REMOVE EXISTING
SA	SUPPLY AIR
SENS/TOT	SENSIBLE/TOTAL
SP	STATIC PRESSURE
TYP	TYPICAL
UH	UNIT HEATER
V/PH/HZ	VOLTS/PHASE/HERTZ
VAV	VARIABLE AIR VOLUME
VD	VOLUME DAMPER
WB	WET BULB
WG	WATER GAUGE
XXX-1	EQUIPMENT DESIGNATION

MECHANICAL LEGEND

SYMBOL	DESCRIPTION
	RIGID DUCTWORK (DOUBLE LINE)
	RIGID DUCTWORK (SINGLE LINE)
	DUCT TRANSITION
UP / DOWN	SUPPLY AIR DUCT, ELBOW/RISER
UP / DOWN	RETURN AIR DUCT, ELBOW/RISER
UP / DOWN	EXHAUST AIR DUCT, ELBOW/RISER
	DUCT ELBOW W/ TURNING VANES
	LONG SWEEP DUCT ELBOW
	ROUND DUCT TAP TRANSITION TAKE-OFF W/ VOLUME DAMPER
	RECTANGULAR DUCT BRANCH TAKE OFF W/ VOLUME DAMPER
	FLEXIBLE DUCTWORK
	SUPPLY AIR DIFFUSER (3-WAY SHOWN, ONE SIDE BLOCKED
	LINEAR AIR DIFFUSER
	RETURN AIR GRILLE
	EXHAUST AIR GRILLE
T N	THERMOSTAT (N-SYSTEM NUMBER) HOME RUN TO SYSTEM
H	HUMIDISTAT
T	TEMPERATURE SENSOR
	CONNECT TO EXISTING (CX)
	POINT OF DISCONNECT
∮	CUBIC FEET PER MINUTE (CFM)
	VOLUME DAMPER
	MOTOR OPERATED DAMPER (MOD)
OS	OCCUPANCY SENSOR, CEILING MOUNTED.
SP	STATIC PRESSURE SENSOR.
	FLOW ARROW
	UNDERCUT DOOR
	UNIT HEATER
	FAN ON ROOF
	CONDENSING UNIT OR HEAT PUMP

XXX-1 — AIR DEVICE DESIGNATION
300 OA — AIR TYP: OA, SA, RA, EA; AIRFLOW QUANTITY IN CFM

DRAWING INDEX

SHEET NO.	NAME
M001	MECHANICAL NOTES, ABBREVIATIONS, & LEGEND
M002	MECHANICAL SPECIFICATIONS
M100	MECHANICAL PLAN
M200	MECHANICAL PIPING PLAN
M300	MECHANICAL DETAILS
M400	MECHANICAL SCHEDULES
M401	MECHANICAL SCHEDULES

APPLICABLE CODES (CHARLES COUNTY, MD)

2021	INTERNATIONAL BUILDING CODE (IBC)
2021	INTERNATIONAL EXISTING BUILDING CODE (IEBC)
2021	INTERNATIONAL RESIDENTIAL CODE (IRC)
2020	NATIONAL ELECTRICAL CODE (NFPA-70)
2021	INTERNATIONAL FUEL GAS CODE (IFGC)
2021	INTERNATIONAL MECHANICAL CODE (IMC)
2021	INTERNATIONAL PLUMBING CODE (IPC)
2021	INTERNATIONAL ENERGY CONSERVATION CODE
2021	INTERNATIONAL FIRE CODE (IFC) CH.12-13, SECTION 312

CODE & PLANS REVIEW

IT IS THE CONTRACTOR'S RESPONSIBILITY TO REVIEW THESE CONSTRUCTION DOCUMENTS WITH THE LOCAL INSPECTORS FOR THEIR COMMENT AND APPROVAL BEFORE STARTING WORK. CONTACT ENGINEER WITH ANY ISSUES RAISED BY THE INSPECTOR.

STATE OF MARYLAND · ISAIAH ABRAMSON · No. 39052 · PROFESSIONAL ENGINEER

"I certify that these documents were prepared or approved by me, and that I am a duly licensed Engineer in the State of Maryland, License Number 39052, Expiration Date 12/23/2026."

MEP Engineer
Abramson Engineering
3655-B Old Court Rd, Suite 24
Baltimore, MD 21208
(410) 259-9461

REVISIONS
- 3/30/2026 PERMIT SET

RENOVATION OF UNIVERSITY OF MARYLAND MEDICAL CENTER OFFICE BUILDING
616 CHARLES STREET
LA PLATA, MARYLAND 20646

R.L. LITTEN & ASSOCIATES, ARCHITECTS, LLC
300 CHARLES STREET, SUITE 4
P.O. BOX 1920, LAPLATA, MD 20646 (301) 934-1471

DRAWN BY: AT
CHK'D BY: SA
PROJECT NO: 25-420

M001

MECHANICAL SPECIFICATIONS

23 0503 ACCESS FOR HVAC PIPING AND EQUIPMENT

1. ALL EQUIPMENT SHALL BE INSTALLED IN SUCH A WAY THAT ALL COMPONENTS REQUIRING ACCESS ARE SO LOCATED AND INSTALLED THAT THEY MAY BE SERVICED, RESET, REPLACED, RE-CALIBRATED, ETC., BY SERVICE TECHNICIANS IN ACCORDANCE WITH THE MANUFACTURER'S RECOMMENDATIONS. IF ANY EQUIPMENT OR COMPONENTS ARE INDICATED ON THE DRAWINGS SUCH THAT THE ACCESS DOES NOT COMPLY WITH THE ABOVE, THE CONTRACTOR SHALL NOTIFY THE ENGINEER IN WRITING BEFORE EQUIPMENT IS INSTALLED.
2. FOR ALL EQUIPMENT AND DEVICES REQUIRING ACCESS AND WHICH WILL BE CONCEALED BEHIND WALLS OR ABOVE HARD CEILINGS, COORDINATE WITH THE GENERAL CONTRACTOR FOR THE INSTALLATION OF ACCESS DOORS, PANELS, ETC., MARK EACH LOCATION WITH HIGHLY VISIBLE TAGS STATING "ACCESS REQUIRED". ACCESS DOORS PLACED IN FIRE RATED PARTITIONS SHALL HAVE RATING EQUAL OR GREATER TO THE PARTITION. CONSULT ARCHITECT FOR PANEL FINISH.
3. ACCESS DOORS AND PANELS SHALL BE MINIMUM OF 16-INCHES BY 16-INCHES OR LARGER TO ALLOW FOR REQUIRED ADJUSTMENTS TO THE EQUIPMENT. DOORS SHALL BE FLUSH WITH ADJACENT SURFACE. CONSULT ARCHITECT FOR MATERIAL AND FINISH FOR EACH DOOR LOCATION. LOCKS SHALL BE FLUSH SCREWDRIVER TYPE WITH STEEL CAMS.
4. ACCESS PANELS ARE NOT REQUIRED IN LIFT OUT TILE CEILINGS.

23 0504 HVAC DEMOLITION

1. MECHANICAL SYSTEMS IN AREAS OUTSIDE SCOPE OF WORK SHALL ALWAYS REMAIN IN OPERATION DURING CONSTRUCTION.
2. DEMOLITION SHALL BE DONE IN A MANNER SO AS NOT TO DAMAGE ADJACENT WORK AND NOT AFFECT THE OPERATION OF SYSTEMS TO REMAIN IN USE. ANY ITEM TO REMAIN THAT IS DAMAGED BY THE CONTRACTOR SHALL BE REPLACED AND/OR REPAIRED AT THE CONTRACTOR'S EXPENSE.
3. IN AREA OF WORK, REMOVE ALL UNUSED AND ABANDONED MECHANICAL EQUIPMENT AND PIPING IN DEMOLISHED WALLS AND ABOVE CEILING SPACES. DO NOT LEAVE ABANDONED IN PLACE UNLESS OTHERWISE NOTED.
4. ALL ELECTRICAL DEVICES, WIRING, CONDUIT, ETC., RELATED TO DEMOLISHED EQUIPMENT/SYSTEMS SHALL BE REMOVED. WIRING SHALL BE DISCONNECTED AT CIRCUIT BREAKERS, REMOVED AND BREAKERS MARKED "SPARE".
5. CONTRACTOR SHALL REMOVE AND RECLAIM ANY REFRIGERANT IN EXISTING SYSTEMS PRIOR TO DEMOLITION OF ANY EQUIPMENT ACCORDING TO FEDERAL REQUIREMENTS.
6. ALL ASBESTOS REMOVAL WILL BE HANDLED BY THE OWNER AND IS NOT A PART OF THIS WORK.
7. THE OWNER RESERVES THE RIGHT TO HAVE SOME OF THE REMOVED MATERIALS STORED ON SITE. THE CONTRACTOR IS RESPONSIBLE FOR COORDINATING, IN CONJUNCTION WITH THE OWNER, THE LIST OF WHAT IS TO BE SALVAGED.

23 0505 EQUIPMENT CONNECTIONS FOR HVAC

1. PROVIDE VALVED WATER AND GAS CONNECTION, AS NEEDED AND AS INDICATED, FOR EQUIPMENT. INCLUDE ACCESSORIES REQUIRED BY CODE, DRAWINGS, AND MANUFACTURER'S INSTALLATION INSTRUCTIONS.
2. FULLY COORDINATE WITH LABORATORY EQUIPMENT, POOL EQUIPMENT, KITCHEN EQUIPMENT, AND LAUNDRY EQUIPMENT SUPPLIERS AND CONFIRM ALL ROUGH-IN REQUIREMENTS PRIOR TO STARTING WORK.
3. UNIONS OR COMPANION FLANGES SHALL BE INSTALLED IN ALL CONNECTIONS TO EQUIPMENT, VALVES, EQUIPMENT ETC., TO PERMIT THE REMOVAL OF THE EQUIPMENT AND SPECIALTIES FOR SERVICING.

23 0506 CURBS AND FLASHINGS FOR HVAC PIPING AND EQUIPMENT

1. ALL ROOFTOP MOUNTED EQUIPMENT SHALL BE INSTALLED USING ROOFTOP CURBS, SUPPORTED BY STRUCTURAL MEMBERS.
2. TOP OF CURBS SHALL BE AT LEAST 14-INCH ABOVE THE TOP OF FINISHED ROOFING MATERIAL. CURBS SHALL BE INSTALLED WITH TOP OF CURB DEAD LEVEL AND BOTTOM TO MATCH ROOF PITCH.
3. CURBS SHALL BE PREFABRICATED 18 GAUGE GALVANIZED STEEL WITH CONTINUOUS WELDED SEAMS, WOOD NAILER, COUNTERFLASHING, R-8 INSULATION. CURBS SHALL CONFORM TO NATIONAL ROOFING CONTRACTOR ASSOCIATION GUIDELINES.
4. PROVIDE ROOFTOP FLASHING, COUNTER FLASHING, AND OTHER OPTIONS AS REQUIRED FOR SATISFACTORY INSTALLATION COORDINATED WITH ROOF MATERIALS, MANUFACTURER'S SPECIFICATIONS, AND LOCATION.
5. CUTTING AND PATCHING OF ROOF SHALL BE COMPLETED BY OWNER'S ROOFER OF RECORD SO AS NOT TO VOID THE WARRANTY.

23 0507 FIRESTOPPING

1. ALL PENETRATIONS THROUGH FIRE RATED WALLS ASSOCIATED WITH THE INSTALLATION SHALL BE SLEEVED AND FIRE-STOPPED USING A UL APPROVED METHOD. UL APPROVED METHOD SHALL MEET OR EXCEED FIRE RATING OF STRUCTURE BEING PENETRATED. REFERENCE ARCHITECTURAL PLANS FOR FIRE RATED STRUCTURES. IF SHOWN, REFERENCE ARCHITECTURAL, MECHANICAL AND ELECTRICAL DRAWINGS FOR PENETRATION DETAILS.
2. ALL OPENINGS THROUGH FIRE RATED WALLS, FLOORS, AND/OR ROOFS FOR DUCTWORK, PIPING, CONDUIT, ETC., SHALL BE FIRE SEALED WITH A CALCIUM SILICATE, SILICONE, "RTV" FOAM, "3M" FIRE RATED SEALANTS, HILTI FIRESTOP SYSTEMS, OR APPROVED EQUAL TO MAINTAIN THE INTENDED FIRE RATING AND ASSOCIATED UL RATINGS AS RECOMMENDED BY THE ARCHITECT AND/OR SEALANT MANUFACTURER.
3. ALL FIRE STOPPING SEALANTS SHALL BE THIXOTROPIC SO AS NOT TO SLUMP OR SAG AND SHALL BE TROWELABLE. FIRE STOPPING SEALANTS SHALL BE INTUMESCENT AND SHALL BE FREE OF ASBESTOS, HALOGENS, AND VOLATILE SOLVENTS.
4. FIRE STOPPING MATERIALS SHALL BE CLASSIFIED IN THE UNDERWRITERS LABORATORIES (UL) FIRE RESISTANCE DIRECTORY.

23-0516 EXPANSION FITTINGS AND LOOPS FOR HVAC PIPING

1. INSTALL PIPING SYSTEM TO PERMIT FEE MOVEMENT FOR EXPANSION.
2. EXPANSION LOOPS AND ANCHORS SHALL BE PROVIDED ON ALL PIPING SYSTEMS WHICH CROSS BUILDING EXPANSION JOINTS AND ALL HORIZONTAL PIPING LENGTHS EXCEEDING 100 FT. OR EACH PORTION THEREOF.

23 517 SLEEVES FOR HVAC PIPING

1. PROVIDE STANDARD IRON PIPE SIZE STEEL SLEEVES FOR ALL LINES PASSING THROUGH CONCRETE SLABS AND MASONRY WALLS. ALL SLEEVES SHALL BE SET BEFORE CONCRETE IS POURED. HOLES REQUIRED IN MASONRY SHALL BE MADE WITH CORE DRILLS IN A MANNER APPROVED BY THE ENGINEER.
2. SLEEVES FOR PIPES THROUGH WALLS AND FLOORS SHALL BE OF SUFFICIENT SIZE TO PERMIT THE INSULATION, WHERE SPECIFIED, TO CONTINUE THROUGH THE SLEEVES. SLEEVES THROUGH FLOORS SHALL BE FLUSH WITH THE UNDERSIDE OF THE SLAB AND EXTEND 2-IN ABOVE FINISH FLOOR. PROJECTING SLEEVES SHALL BE PROVIDED WITH ANCHORS TO PREVENT THEM FROM BEING LOOSENED AND KNOCKED DOWN IN THE FLOOR CONSTRUCTION. THE ANNULAR SPACE BETWEEN PIPE AND ALL SLEEVES SHALL BE CAULKED WITH POLYSULFIDE CAULKING COMPOUND. THE ANNULAR SPACE SHALL NOT BE LARGER THAN 1/2" FOR ALL PIPES.
3. UNUSED SLEEVES SHALL BE PLUGGED AND FINISHED TO MATCH ADJOINING SURFACE.

23 518 ESCUTCHEONS FOR HVAC PIPING

1. FIT ALL PIPES PASSING THROUGH WALLS, FLOORS, OR CEILINGS EXPOSED IN FINISHED ROOMS WITH STEEL OR BRASS ESCUTCHEONS. WHERE SURFACE IS TO RECEIVE A PAINT FINISH, ESCUTCHEONS SHALL BE PRIME PAINTED; OTHERWISE MAKE ESCUTCHEONS NICKEL OR CHROME PLATED. WHERE PIPING IS INSULATED, FIT ESCUTCHEONS OUTSIDE INSULATION.

23 0519 METERS AND GAGES FOR HVAC PIPING

1. PRESSURE/TEMPERATURE TEST PLUGS (PETE'S PLUG) - 1/4-INCH NPT FITTINGS TO RECEIVE EITHER A TEMPERATURE OR PRESSURE PROBE, 1/8-INCH OD FITTING AND CAPS SHALL BE BRASS WITH VALVE CORE OF NORDEL, RATED AT 400 PSI, 0°F TO 200°F.
2. THERMOMETERS - BIMETAL, 4-INCH DIAMETER, FULLY ADJUSTABLE WITH CLEAR ACRYLIC WINDOW AND BRASS SEPARABLE SOCKET.
3. {ADD A SPECIFICATION FOR PRESSURE GAUGES}

23 0523 VALVES FOR HVAC PIPING

1. ALL VALVES SHALL BE LINE SIZE. VALVES INSTALLED IN INSULATED PIPING SYSTEMS SHALL HAVE 2" STEM EXTENSIONS.
2. WATER SHUTOFF 2IN AND SMALLER: SHALL BE BALL TYPE, FULL PORT, STAINLESS STEEL STEM AND BALL AND TEFLON SEAT.
3. WATER SHUTOFF 2-1/2 IN AND LARGER: SHALL BE RESILIENT SEATED BUTTERFLY TYPE, CLASS 125 LUGGED CAST IRON BODY, WITH TYPE 304 SS STEM, RATED FOR 100% BUBBLE TIGHT END OF LINE SHUTOFF SERVICE. VALVE SHALL HAVE FLANGED ENDS AND CAPABLE OF BEING REFITTED WHILE THE VALVE REMAINS IN THE LINE.
4. WATER BALANCING 2" AND SMALLER: BALL TYPE BRASS OF BRONZE BODY, CHROME PLATED BRASS BALL, PTFE SEAT, AND STEM PACKING. RATED FOR 250 PSI AND 250 °F. LOW LOSS HIGH SIGNAL VENTURI SECTION WITH SCHRADER OR QUICK DISCONNECT PRESSURE PORTS. ACCURACY PLUS OR MINUS 3%. PROVIDE WITH BLOWOUT PROOF STEM AND MEMORY STOPS. BASIS OF DESIGN IS BELL & GOSSETT CIRCUIT SETTER.

23 0529 HANGERS AND SUPPORTS FOR HVAC PIPING AND EQUIPMENT

1. FURNISH AND INSTALL SUITABLE AND SUBSTANTIAL HANGERS AND SUPPORTS FOR ALL DUCTWORK, PIPING, FLOOR-MOUNTED, AND SUSPENDED EQUIPMENT. FASTEN HANGERS DIRECTLY TO BUILDING STRUCTURE AND NOT TO OTHER EQUIPMENT, THE ROOF DECK OR CEILING STRUCTURE.
2. HANGERS SHALL BE OF STANDARD WEIGHT STEEL. PERFORATED STRAP HANGERS ARE PROHIBITED. HANGERS SHALL INCLUDE ALL MISCELLANEOUS STEEL AND HARDWARE NECESSARY FOR THE INSTALLATION OF WORK.
3. HANGERS FOR PIPES GREATER OR EQUAL TO 3IN SHALL BE CLEVIS TYPE. HANGERS FOR PIPES GREATER OR EQUAL TO 4" AND CARRYING FLUID ABOVE 150F SHALL BE PIPE ROLL TYPE. USE UNISTRUT TRAPEZE TYPE HANGERS WHEN TWO OR MORE PIPES RUN IN PARALLEL.
4. PIPE STANDS SHALL BE LIMITED TO PIPING THAT IS 48-INCHES OR LESS ABOVE THE FLOOR.
5. HANGERS FOR ALL INSULATED PIPING SHALL BE SIZED AND INSTALLED FOR THE OUTER DIAMETER OF INSULATION. INSTALL 6" LONG SPLIT CIRCLE GALVANIZED SADDLE BETWEEN THE HANGER AND THE PIPE INSULATION.S
6. PIPES PASSING THROUGH FLOORS SHALL BE SUPPORTED BY RISER CLAMPS.
7. HANGERS AND PIPING OF DISSIMILAR METALS SHALL BE DI-ELECTRICALLY SEPARATED FROM ONE ANOTHER.

23 0553 IDENTIFICATION FOR HVAC PIPING AND EQUIPMENT

1. ALL EQUIPMENT, DUCTS, PIPING, DAMPERS, AND VALVES SHALL BE IDENTIFIED WITH PERMANENT AND DURABLE LABELS. FOR EQUIPMENT, PROVIDE LAMACOID PLASTIC LABEL PERMANENTLY AFFIXED IN A READILY VISIBLE LOCATION. AN ACCEPTABLE SUBSTITUTE FOR INLINE PUMPS AND FANS IS A CHAIN-HUNG TAG IDENTIFYING THE EQUIPMENT NUMBER AND ITS SERVICE AREA. FOR PIPES USE STANDARD COLOR-CODED BANDS EVERY 20 FEET IDENTIFYING SERVICE AND SPECIFIC AREA OF THE BUILDING SERVED. FOR DUCTWORK USE DUCT STENCIL LABELS.
2. ALL DAMPERS AND VALVES SHALL HAVE THEIR NORMAL OPERATING POSITION IDENTIFIED SUCH AS "NORMALLY OPEN" OR "NORMALLY CLOSED".
3. WHEN EQUIPMENT IS INSTALLED ABOVE A CEILING GRID, MARK THE LOCATION OF EQUIPMENT, VALVES, DAMPERS, FILTERS, ETC., ON GRID WITH COMPUTER PRINTED LABELS.

23 0593 TESTING, ADJUSTING, AND BALANCING (TAB)

1. ALL AIR AND HYDRONIC SYSTEMS SHALL BE TESTED AND BALANCED IN ACCORDANCE WITH (AABC) ASSOCIATED AIR BALANCE COUNCIL OR (NEBB) NATIONAL ENVIRONMENTAL BALANCING BUREAU STANDARDS. BALANCING REPORT SHALL BE ON AABC OR NEBB TYPE FORMS. EXISTING SYSTEMS THAT WERE AFFECTED BY THE RENOVATIONS SHALL BE REBALANCED.
2. TESTING AND BALANCING SHALL BE PERFORMED BY AN INDEPENDENT TEST AND BALANCE AGENCY THAT SPECIALIZES IN THE TESTING AND BALANCING OF HVAC SYSTEMS. THE AGENCY SELECTED SHALL BE FULLY CERTIFIED BY THE AABC OR NEBB. THE AGENCY SHALL SUBMIT QUALIFICATIONS FOR APPROVAL PRIOR TO COMMENCING ANY WORK ON THIS PROJECT.
3. CONTRACTOR SHALL CHECK FOR PROPER ROTATION OF ALL ROTATING EQUIPMENT AND INSTALL FILTERS BEFORE TAB. BALANCE WATER AND AIR FLOWS, AT MAIN UNIT AND EACH ZONE AND RECORD SUPPLY AIR TEMPERATURES. START EQUIPMENT UNDER SUPERVISION OF MANUFACTURER'S SERVICE REPRESENTATIVE. ADJUST TEMPERATURE CONTROLS AND OBSERVE LOADING OF ALL EQUIPMENT UNDER SEVERAL CONDITIONS OF FULL AND PART LOAD. AFTER UON, THE CONTRACTOR SHALL CHECK ALL EQUIPMENT AND PERFORM START UP IN ACCORDANCE WITH MANUFACTURER RECOMMENDATIONS.
4. CONTRACTOR SHALL PROVIDE ALL LABOR, PRESSURE GAUGES, FLOW METERS, SHEAVES AND BELTS REQUIRED TO BALANCE SYSTEM.
5. FANS, AIR HANDLING UNITS, PUMPS, CHILLERS, HEAT EXCHANGERS AND COILS SHALL BE BALANCED TO WITHIN PLUS OR MINUS 5% OF THEIR DESIGN CAPACITIES. ALL OTHER AIR AND WATER QUANTITIES SHALL BE BALANCED TO WITHIN PLUS OR MINUS 10% PERCENT OF THE DESIGN QUANTITIES.
7. WORK UNDER THIS TAB SECTION IS NOT CONSIDERED COMPLETE UNTIL APPROVED BY THE ENGINEER.

23 0700 INSULATION

1. ALL INSULATION SHALL BE INSTALLED OVER CLEAN, DRY SURFACES. INSULATION SHALL BE DRY AND IN GOOD CONDITION. WET OR DAMAGED INSULATION IS NOT ACCEPTABLE. NO INSULATION SHALL BE APPLIED PRIOR TO PRESSURE TEST COMPLETION OF THE RESPECTIVE PIPING AND/OR DUCT SYSTEM.
2. INSULATION SHALL HAVE A FLAME SPREAD RATING OF NOT MORE THAN 25 AND A SMOKE DEVELOPED RATING OF NO HIGHER THAN 50 WHEN TESTED IN ACCORDANCE WITH ASTM C 411, OR AS REQUIRED BY LOCAL CODES.
3. ALL INSULATION ENDS SHALL BE TAPERED AND SEALED FOR ALL SERVICES.
4. ALL FLEXIBLE ELASTOMERIC INSULATION SHALL HAVE ALL FITTINGS, BUTT ENDS, AND SEAMS SEALED WITH VAPOR BARRIER ADHESIVE.
5. PROVIDE REMOVABLE INSULATION SECTIONS TO COVER PARTS OF EQUIPMENT WHICH MUST BE OPENED PERIODICALLY FOR MAINTENANCE INCLUDING METAL VESSEL COVERS, FASTENERS, FLANGES, CHILLED WATER PUMPS, FRAMES, AND ACCESSORIES.
6. REFRIGERANT PIPE INSULATION
   a. INSULATE ALL REFRIGERANT PIPING, FITTINGS, VALVES, AND ACCESSORIES WITH 1" THICK CLOSED CELL ELASTOMERIC THERMAL INSULATION WITH A MAXIMUM WATER VAPOR TRANSMISSION OF 0.20 PER INCH, HAVING A "K" FACTOR OF 0.28 AT 75° F MEAN AND A FLAME SPREAD AND SMOKE DEVELOPED RATING PER ASTM E84, NFPA 255 OR UL 723. POLYOLEFIN INSULATION SHALL NOT BE ALLOWED.
   b. INSULATION SHALL BE TUBULAR SEAMLESS OR WITH A SELF-SEAL SYSTEM REINFORCED WITH LAP SEAL TAPE.
   c. FULLY COAT ALL EXTERIOR INSULATION WITH WEATHER AND UV RESISTANT WATER BASED FINISH EQUAL TO ARAMFLEX WB FINISH OR INSTALL UV RESISTANT JACKETING ON ALL EXTERIOR INSULATION.

23 0713 DUCT INSULATION

1. ALL SUPPLY, RETURN AND OUTSIDE AIR DUCTWORK SHALL BE INSULATED WITH ONE OF THE SYSTEMS LISTED BELOW.
2. WHERE INDICATED, SUPPLY AND RETURN AIR DUCTWORK WITHIN AIR-CONDITIONED SPACES SHALL BE UN-INSULATED SO LONG AS DUCT SYSTEM AND SPACE TEMPERATURE AND HUMIDITY CONDITIONS ARE DESIGNED AND INSTALLED BY CONTRACTOR SUCH THAT CONDENSATION IS PREVENTED.
3. MAINTAIN CONTINUITY OF VAPOR RETARDER USING STAPLES AND MASTIC SEALANT FOR ALL INSULATION.
4. R-6, 1½" THICK AND 1.5 PCF FIBERGLASS DUCT WRAP INSULATION - SECURE INSULATION WITH PINS AND ADHESIVE, WITH FOIL VAPOR BARRIER, EXCEPT THOSE PORTIONS WHICH ARE LINED FOR ACOUSTICAL PURPOSES. WRAP AROUND DUCT INSULATION SHALL BE APPLIED WITH ALL JOINTS BUTTED FIRMLY TOGETHER. INSULATION SHALL BE CEMENTED TO THE SURFACE WITH FIREPROOF ADHESIVE APPLIED IN 6" WIDE STRIPS ON 12" CENTERS. ALL JOINTS IN THE INSULATION COVERING SHALL BE SEALED WITH ADHESIVE. WHERE DUCTS ARE OVER 24" WIDE, THE DUCTWRAP SHALL BE ADDITIONALLY SECURED TO BOTTOM OF RECTANGULAR OR OVAL DUCTS WITH MECHANICAL FASTENERS ON 16" CENTERS TO PREVENT SAGGING. VAPOR BARRIER SHALL BE LEGIBLY PRINTED BY THE MANUFACTURER TO SHOW NOMINAL THICKNESS AND TYPE OF INSULATION. BASIS OF DESIGN, JOHNS MANSVILLE MICROLITE FSK.
5. R-6, 1½" THICK RIGID DUCT INSULATION, 3.0 PCF - SECURE INSULATION IMPALED OVER WELDED PINS AND SECURED WITH WHITE INSULATION CAPS. ALL SEAMS SHALL BE FIRMLY BUTTED AND SEALED WITH WHITE PRESSURE SENSITIVE VAPOR BARRIER TAPE.
6. R-6, 1½" INCH THICK ELASTOMERIC INSULATION - SECURE WITH ADHESIVE AND MECHANICAL FASTENERS. INSULATION SHALL HAVE ALL FITTINGS, BUTT ENDS, AND SEAMS SEALED WITH VAPOR BARRIER ADHESIVE. BASIS OF DESIGN, AP ARMAFLEX FS (SA).
7. DUCT LINER SHALL BE APPLIED TO THE FIRST 15'-0" OF SUPPLY AND RETURN DUCTWORK FROM ALL AIR HANDLING UNITS, FAN COIL UNITS, AND VAV BOXES FOR NOISE REDUCTION. DUCT LINER SHALL BE 1" THICK, EQUAL TO ARMSTRONG AP ARMAFLEX SA. LINED DUCTWORK SIZE SHALL BE INCREASED 2" TO MAINTAIN CROSS SECTIONAL AREA.
8. DUCT LINER INSULATION SHALL BE APPLIED WITH JOINTS PRECOATED WITH ADHESIVE AND BUTTED FIRMLY TOGETHER. LINING SHALL BE CEMENTED TO DUCTWORK WITH A MINIMUM OF 75%COVERAGE OF FIRE RESISTANT ADHESIVE. MECHANICAL FASTENERS ON 16" CENTERS AND ADHESIVE SHALL BE USED WHEN DUCT WITHIN EXCEEDS 12" OR WHEN DUCT HEIGHT EXCEEDS 24".

23 0719 HVAC PIPING INSULATION

1. INSULATE HOT WATER, CHILLED WATER, CONDENSER WATER, CONDENSATE DRAIN, STEAM, AND STEAM CONDENSATE PIPING WITH RIGID PRE-MOLDED FIBERGLASS OR ELASTOMERIC INSULATION, SEE TABLE BELOW FOR APPLICATION AND THICKNESS. INSULATION SHALL HAVE A MAXIMUM CONDUCTIVITY K VALUE OF 0.25 BTU/HR-FT2-°F AT 75°F MEAN TEMPERATURE.

   a. INSULATION THICKNESS TABLE NOMINAL PIPE SIZE

	<1"	1" TO <1½"	1½" <4"
FLUID OPERATING RANGE	INSULATION THICKNESS		
141-200°F	1.5"	1.5"	2.0"
105-140°F	1"	1"	1.5"
40-60°F	0.5"	0.5"	1.5"
< 40°F	0.5"	1"	1.5"

2. PROVIDE CONTINUOUS VAPOR RETARDER. SEAL VAPOR RETARDER WITH BRUSH ON MASTIC AT ALL JOINTS.
3. INSULATION SHALL BE INSTALLED CONTINUOUS THROUGH SUPPORT POINTS. INSULATION MAY END AT COMPONENTS THAT PROJECT MORE THAN 6" FROM WETTED SURFACE.
4. VALVES AND OTHER PIPING APPURTENANCES SHALL BE INSULATED WITH SYSTEMS HAVING REMOVABLE COVERS FOR USE AND SERVICE.
5. ALL PIPE INSULATION SHALL BE INSTALLED WITH JOINTS BUTTED FIRMLY TOGETHER. ALL VALVES AND FITTINGS SHALL BE INSULATED USING MITERED SECTIONS OF INSULATION EQUAL IN DENSITY AND THICKNESS TO THE ADJOINING INSULATION, OR WITH AN INSULATION CEMENT EQUAL IN THICKNESS TO THE ADJOINING INSULATION OR PREMOLDED INSULATED FITTINGS. THE INSULATION APPLIED TO THE VALVES AND FITTINGS SHALL BE COVERED WITH THE SAME TYPE OF COVERING AS USED ON THE PIPE INSULATION. NO STAPLES.

23-0800 COMMISSIONING OF HVAC

1. AN APPROVED COMMISSIONING AGENT SHALL DIRECT TESTS IN ACCORDANCE WITH INTERNATIONAL ENERGY CONSERVATION CODE (IECC).PROVIDE FULL ASSISTANCE FROM SERVICE TECHNICIANS SKILLED IN EACH TRADE (MECHANICAL, ELECTRICAL, CONTROLS) AND KNOWLEDGEABLE OF THE INSTALLATION TO COMMISSIONING AGENT WHO WILL DIRECT TESTS IN ACCORDANCE WITH AN INDUSTRY STANDARD PROCESS SUCH AS ASHRAE STANDARD 202.

23 0923 HVAC CONTROLS:

1. PROVIDE ONE CONTROLLER FOR EACH SYSTEM AS SPECIFIED IN DRAWINGS. PLACEMENT SHALL BE AS SHOWN ON DRAWINGS AND MOUNTED 48" ABOVE FINISHED FLOOR. PROVIDE ALL CONTROL WIRING BETWEEN SENSORS, EQUIPMENT, AND CONTROLLER TO ENSURE OPERATIONS SYSTEM.
2. NO ACCESS SHALL BE RESTRICTED FROM OWNER OR DESIGNATED PERSONNEL.
3. CONTRACTOR SHALL PERFORM FUNCTIONAL TESTING, CALIBRATE, ADJUST, PROGRAM AND ATTAIN PROPER WORKING CONDITION IN ACCORDANCE WITH THE CONSTRUCTION DOCUMENTS AND MANUFACTURER'S INSTALLATION INSTRUCTIONS.

23 1000 HVAC PIPING, GENERAL REQUIREMENTS

1. INSTALL PIPING PARALLEL WITH OR AT RIGHT ANGLES TO THE BUILDING WALLS. ALL VERTICAL RISERS SHALL BE INSTALLED PLUMB AND STRAIGHT.
2. INSTALL PIPING TIGHT TO STRUCTURE ABOVE AND IN AS SHORT AND DIRECT ARRANGEMENT AS POSSIBLE SO AS TO REDUCE PRESSURE DROP. OFFSETS ARE ALLOWED TO INCREASE HEADROOM.
3. INSTALL PIPING SLOPED IN THE DIRECTION OF FLOW SO THAT IT IS POSSIBLE TO FULLY DRAIN ALL SYSTEMS.
4. PIPE ENDS SHALL BE CUT SQUARE AND THOROUGHLY CLEANED BEFORE INSTALLING. PROVIDE DIELECTRIC UNIONS BETWEEN DISSIMILAR METALS. ALL PIPING SHALL BE IN STRICT CONFORMANCE WITH ASTM, AND OWNER'S REQUIREMENTS, WHICHEVER IS MOST STRINGENT. UNIONS OR FLANGES MUST BE USED AT EQUIPMENT CONNECTIONS WHERE SERVICE OR REMOVAL MAY BE REQUIRED.
5. ALL PIPING AND EQUIPMENT SHALL BE PRESSURE TESTED WITHOUT LEAKAGE AT A MINIMUM PRESSURE OF 125 PSI.

23 2213 CONDENSATE DRAIN PIPING

1. CONDENSATE DRAIN PIPING: SHALL BE SCHEDULE 40 PVC PIPE AND FITTINGS WITH SOLVENT WELD JOINTS, WHEN LOCATED IN NON-RETURN AIR PLENUM RATED CEILING SPACES. PIPING SHALL BE TYPE L COPPER WHEN LOCATED IN AIR PLENUM RATED SPACES.
2. ALL CONDENSATE DRAINS SHALL BE TRAPPED. PROVIDE CLEANOUT OF CONDENSATE DRAINS.

23 2300 REFRIGERANT PIPING

1. REFRIGERANT PIPING SHALL BE ONE OF THE FOLLOWING:
   a. REFRIGERANT PIPING SHALL BE COPPER TUBE: ASTM B280, TYPE 'ACR' TYPE 'L', SEAMLESS, HARD DRAWN SOFT ANNEALED SEAMLESS, FACTORY CLEANED AND CAPPED PRIOR TO SHIPPING. FITTINGS SHALL BE WROUGHT COPPER FITTINGS CONFORMING TO ANSI B16.22. JOINTS SHALL BE AWS A5.8 CLASSIFICATION BCUP-3 BRAZED (SILVER) FILLER MATERIAL.
   b. PRE-INSULATED COPPER ROLL ALSO ACCEPTABLE.
2. SERVICE VALVES, CHARGING PORTS, FILTER-DRIER, SIGHT GLASS, AND A THERMOSTATIC EXPANSION VALVE (TXV) SHALL BE INSTALLED FOR EACH SYSTEM AS A MINIMUM.
3. SIZE LINES WITH ADEQUATE LIFT TRAPS AND DOUBLE SUCTION RISERS AS NECESSARY TO MEET THE NEEDS OF EQUIPMENT SPECIFIED, FIELD CONDITIONS, AND EQUIPMENT MANUFACTURER'S RECOMMENDATIONS.
4. WHILE SOLDERING, FILL THE PIPE WITH NITROGEN OR CARBON DIOXIDE TO PREVENT FORMATION OF SCALE.
5. AFTER INSTALLATION, THE REFRIGERANT PIPING SHALL BE PRESSURIZED TO 75 PSI WITH NITROGEN. ALL JOINTS SHALL BE THOROUGHLY LEAK TESTED USING AN ELECTRONIC LEAK DETECTOR, A HALIDE TORCH, OR SOAP BUBBLES. AFTER THE REFRIGERANT PIPING HAS BEEN LEAK CHECKED, IT SHALL BE EVACUATED TWICE BY EITHER THE DEEP EVACUATION OR THE TRIPLE EVACUATION METHOD. THE UNIT MANUFACTURER RECOMMENDED METHOD SHALL BE FOLLOWED. AFTER THE EVACUATION, THE PIPING SHALL THAN BE CHARGED WITH THE SYSTEM REFRIGERANT.

23 3113 METAL DUCTS

1. ALL DUCTWORK AND ACCESSORIES, UNLESS OTHERWISE NOTED, SHALL BE SMACNA 2" PRESSURE CLASS GALVANIZED SHEET STEEL, FABRICATED AND INSTALLED IN STRICT COMPLIANCE WITH ALL THE APPLICABLE RECOMMENDATIONS AND STANDARDS OF SMACNA INCLUDING IN PARTICULAR HVAC DUCT CONSTRUCTION STANDARDS, METAL AND FLEXIBLE, AND NFPA CODES, LATEST EDITIONS.
2. SUPPLY AIR DUCTS SHALL BE SEALED TO SMACNA SEAL CLASS A (LONGITUDINAL AND TRANSVERSE SEAMS) USING MASTIC MATERIALS AND METHODS MEETING INTERNATIONAL ENERGY CONSERVATION CODE.
3. ALL DUCT DIMENSIONS LISTED ON PLANS ARE INSIDE CLEAR DIMENSIONS. WHERE INTERNALLY LINED DUCTWORK IS SPECIFIED, ADJUST SHEET METAL DIMENSIONS TO ACCOMMODATE LINER.
4. DUCT ELBOW RADIUS SHALL BE MINIMUM OF 1.5 TIMES DUCT WIDTH. DUCT TRANSITIONS SHALL BE 2:1 RATIO OR MORE GRADUAL. ALL DUCT ELBOWS SHALL BE RADIUS TYPE WITH A RADIUS-TO-WIDTH RATIO OF 1.0 OR GREATER OR RECTANGULAR WITH TURNING VANES.
5. ALL BRANCH CONNECTION FITTINGS IN RECTANGULAR DUCTWORK SHALL BE 45 DEGREE TRANSITION TYPE, CONICAL FITTINGS, OR SPIN-IN FITTINGS WITH INTEGRAL AIR SCOOPS. BUTT FITTINGS ARE NOT ACCEPTABLE.
6. PROVIDE AND INSTALL BALANCING DAMPERS ON ALL BRANCH DUCTWORK (WHETHER OR NOT THEY ARE SHOWN ON DRAWINGS), REQUIRED TO PROPERLY DISTRIBUTE AND BALANCE THE AIRFLOWS.
7. DUCTWORK IS SHOWN IN SCHEMATIC FORM. ALL REQUIRED DUCT RISERS AND DROPS TO ALLOW GENERAL ROUTING DEPICTED MAY NOT BE SHOWN. PROVIDE OFFSETS AS REQUIRED TO MEET SPACE REQUIREMENTS AND TO AVOID INTERFERENCE WITH OTHER TRADES AND FIELD CONDITIONS. EXACT LOCATION OF THE DUCTWORK MAY VARY ACCORDING TO THE COORDINATED SPACE REQUIREMENTS. EACH TRADE SHALL BE TOTALLY RESPONSIBLE FOR COORDINATION WITH OTHER TRADES. NOTIFY ENGINEER OF CONDITIONS REPRESENTING SIGNIFICANT CHANGES TO THE DESIGNED ROUTING.
8. INSTALL DUCTS IN LONGEST LENGTH POSSIBLE AND FEWEST POSSIBLE JOINTS. INSTALL FABRICATED FITTINGS FOR CHANGES IN DIRECTIONS, CHANGES IN SIZE AND SHAPE, AND CONNECTIONS.
9. INSTALL DUCTS, UNLESS OTHERWISE INDICATED, VERTICALLY AND HORIZONTALLY, PARALLEL AND PERPENDICULAR TO BUILDING LINES; AVOID DIAGONAL RUNS UNLESS SPECIFICALLY INDICATED ON DRAWINGS.
10. ELECTRICAL EQUIPMENT SPACES: ROUTE DUCTWORK TO AVOID PASSING THROUGH TRANSFORMER VAULTS AND ELECTRICAL EQUIPMENT SPACES AND ENCLOSURES. AVOID ROUTING DUCTWORK DIRECTLY ABOVE ELECTRICAL EQUIPMENT UNLESS SPECIFICALLY INDICATED ON THE MECHANICAL DRAWINGS.
11. NON-FIRE-RATED PARTITION PENETRATIONS: WHERE DUCTS PASS THROUGH INTERIOR PARTITIONS AND ARE EXPOSED TO VIEW IN MECHANICAL ROOMS, CONCEAL SPACE BETWEEN CONSTRUCTION OPENING AND DUCT OR DUCT INSULATION WITH SHEET METAL FLANGES OF SAME METAL THICKNESS AS DUCT. OVERLAP OPENING ON FOUR SIDES BY AT LEAST 1-1/2 INCHES UNLESS INDICATED OTHERWISE.

23 3300 DUCT ACCESSORIES

1. VOLUME-CONTROL DAMPERS - PROVIDE MANUAL LOCKING QUADRANT VOLUME CONTROL DAMPERS AS SHOWN ON DRAWING AND AT EVERY BRANCH DUCT FROM THE MAIN LOW VELOCITY TRUNK DUCTS IN CONFORMANCE WITH AABC COMPLETE WITH REQUIRED HARDWARE AND ACCESSORIES. CLOSE DUCT PENETRATIONS FOR DAMPER COMPONENTS TO SEAL DUCT CONSISTENT WITH PRESSURE CLASS. ACCESS PANELS ARE REQUIRED FOR THESE DEVICES IN CEILINGS. ALL RECTANGULAR DAMPERS IN OUTSIDE AIR, RELIEF AIR, OR RETURN AIR DUCTS SHALL BE OF OPPOSED BLADE TYPE. ALL OUTSIDE AIR DUCT DAMPERS SHALL ALSO BE OF THE LOW LEAKAGE TYPE.
2. REMOTE-OPERATED VOLUME-CONTROL DAMPERS - WHERE ACCESS TO ADJUST THE DAMPER IS RESTRICTED , A REMOTE-OPERATED TYPE DAMPER SHALL BE PROVIDED, WITH COVER PLATE LOCATED IN AN ACCESSIBLE LOCATION. REMOTE VOLUME DAMPER OPERATORS SHALL BE MODEL 1200 WORM GEAR OPERATOR WITH FLEX SHAFT AND TERMINATION MOUNTING BRACKET AS MANUFACTURED BY YOUNG REGULATOR COMPANY OR APPROVED EQUAL.
3. BACKDRAFT DAMPERS - MULTIPLE BLADE, PARALLEL-TYPE DAMPER CONSTRUCTED OF GALVANIZED STEEL WITH FELT OR FLEXIBLE VINYL SEALED EDGES, BALL BEARINGS, PIVOT PIN, AND ADJUSTMENT DEVICE FOR VARYING PRESSURES.
4. FIRE DAMPERS - PROVIDE FIRE DAMPERS IN DUCT PENETRATIONS OF RATED DEMISING WALLS AND OTHER RATED PARTITIONS. CONTRACTOR SHALL INDICATE THE LOCATION OF FIRE DAMPERS ON THE DESIGN DRAWINGS. PROVISION SHALL BE MADE FOR READY ACCESS TO RESET EACH FIRE DAMPER. ALL FIRE DAMPERS MUST CARRY EVIDENCE OF UL STANDARD 555 RATING. PROVIDE 12"X12" GASKETED ACCESS DOORS IN DUCTS FOR ALL DAMPERS AND DEVICES IN DUCTS. DAMPERS SHALL HAVE FIRE RATING EQUAL TO PENETRATED WALL OR PARTITION.
5. FIRE DAMPERS SHALL BE FUSIBLE LINK TYPE AND SET TO 165F ABOVE NORMAL ROOM OPERATING TEMPERATURE. DUCT SMOKE DETECTORS AND ACCESSORIES SHALL BE UL TESTED AND LISTED. EQUIPMENT AND INSTALLATION SHALL MEET ALL PERTINENT REQUIREMENTS OF THE MECHANICAL CODE AND NFPA 72. DUCT SMOKE DETECTORS LOCATED MORE THAN 10 FT ABOVE THE FINISHED FLOOR, OR LOCATED SUCH THAT THE DETECTOR'S ALARM INDICATOR IS NOT VISIBLE TO RESPONDING PERSONNEL, SHALL BE PROVIDED WITH REMOTE ALARM INDICATORS. EACH REMOTE INDICATOR SHALL BE CLEARLY LABELED AS TO FUNCTION AND AIR HANDLING UNIT SERVED, WITH AN ACRYLIC ENGRAVED NAMEPLATE.

23 3346 FLEXIBLE DUCTWORK

1. FLEXIBLE DUCTWORK IS PERMITTED ONLY WHERE SPECIFICALLY SHOWN AS SUCH ON PLANS. FLEXIBLE DUCTS ARE NOT PERMITTED IN ROOMS WITHOUT CEILINGS.
2. FLEXIBLE DUCTS SHALL BE INDEPENDENTLY SUPPORTED FROM THE STRUCTURE, CONNECTED WITH PLASTIC DRAW BANDS, AND TIGHTENED WITHOUT CRIMPING. FLEXIBLE DUCTS SHALL BE LIMITED TO 6FT MAXIMUM STRAIGHT LENGTH.
3. FLEXIBLE DUCTS SHALL BE CONSTRUCTED OF 1-1/2" INSULATION WITH VINYL VAPOR BARRIER JACKET AND RATED AT 10 IN-WC FOR SIZES THOUGH 12", UL LISTED, AND MEET 25/50 FLAME AND SMOKE TEST. IT SHALL BE PULLED TAUT AND SUPPORTED TO PREVENT SAGGING.
4. MAKE CONNECTIONS TO CEILING AIR DEVICES VIA A GALVANIZED STEEL ELBOW ON THE AIR DECK INLET.

23 3350 EQUIPMENT

1. ALL EQUIPMENT AND DEVICES FOR THIS PROJECT SHALL BE NEW, FREE OF DEFECTS, AND UL LISTED. DEVICES, EQUIPMENT, AND SYSTEMS SHALL BE INSTALLED PER NATIONAL ELECTRICAL CODE REQUIREMENTS AND MANUFACTURER'S INSTRUCTIONS.
2. EQUIPMENT SHALL BE AS SCHEDULED AND MEET ALL REQUIREMENTS AND PERFORMANCE LISTED IN SCHEDULES. MANUFACTURERS LISTED ARE BASIS OF DESIGN. SUBSTITUTIONS ARE SUBJECT TO OWNER AND ENGINEER APPROVAL. IT IS THE CONTRACTOR'S RESPONSIBILITY TO RE-EVALUATE ANY SUBSTITUTED EQUIPMENT AND CERTIFY THAT THE SUBSTITUTION IS EQUIVALENT TO BASIS OF DESIGN.
3. INSTALL ALL EQUIPMENT IN ACCORDANCE WITH MANUFACTURER'S INSTRUCTIONS AND CLEARANCES. IT IS THE CONTRACTORS RESPONSIBILITY TO CONFIRM THESE REQUIREMENTS PRIOR TO STARTING WORK.
4. WHERE MOUNTING HEIGHTS ARE NOT DETAILED OR DIMENSIONED, INSTALL MECHANICAL SERVICES AND OVERHEAD EQUIPMENT TO PROVIDE THE MAXIMUM HEADROOM POSSIBLE.
5. INSTALL MECHANICAL EQUIPMENT TO FACILITATE MAINTENANCE AND REPAIR OR REPLACEMENT OF EQUIPMENT COMPONENTS. AS MUCH AS PRACTICAL, CONNECT EQUIPMENT FOR EASE OF DISCONNEC

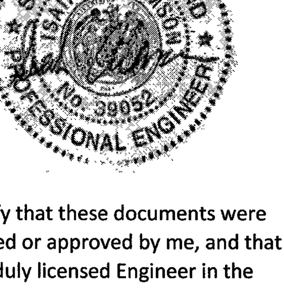

"I certify that these documents were prepared or approved by me, and that I am a duly licensed Engineer in the State of Maryland, License Number 39052, Expiration Date 12/23/2026."

MEP Engineer
Abramson Engineering
3655-B Old Court Rd, Suite 24
Baltimore, MD 21208
(410) 259-9461

REVISIONS
- 3/30/2026 PERMIT SET

RENOVATION OF UNIVERSITY OF MARYLAND MEDICAL CENTER OFFICE BUILDING
616 CHARLES STREET
LA PLATA, MARYLAND 20646

R.L. LITTEN & ASSOCIATES, ARCHITECTS, LLC
300 CHARLES STREET, SUITE 4
P.O. BOX 1920, LAPLATA, MD 20646 (301) 934-1471

DRAWN BY: AT
CHK'D BY: SA
PROJECT NO: 25-420

M002

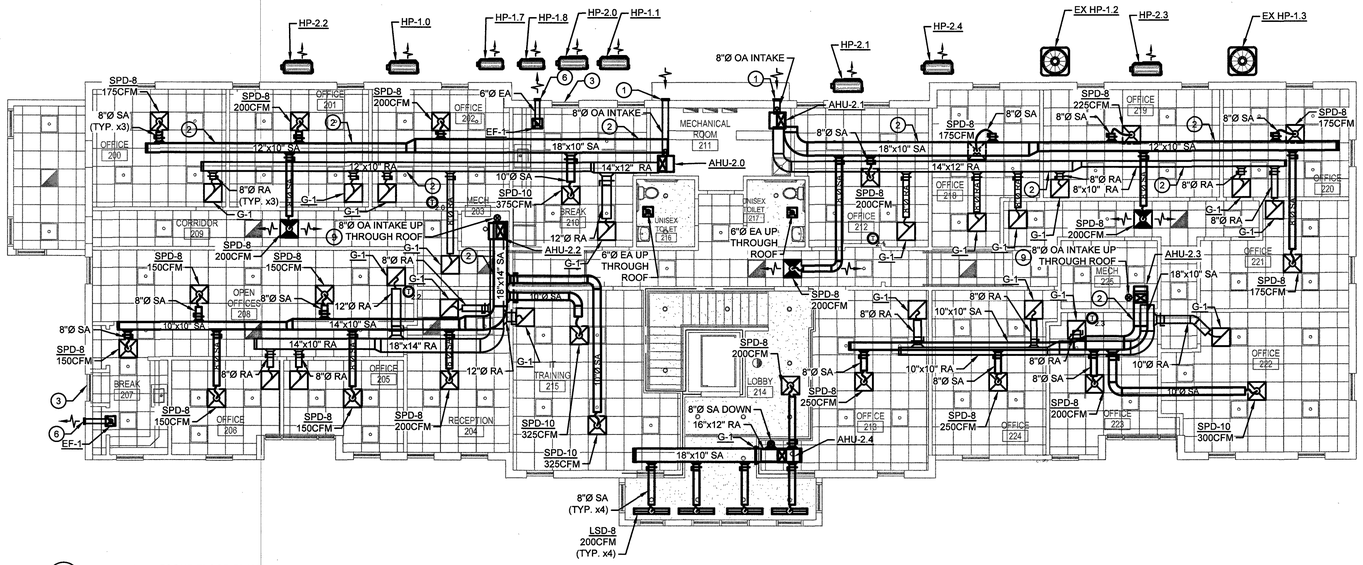

2 MECHANICAL SECOND FLOOR PLAN
SCALE: 1/8" = 1'-0"

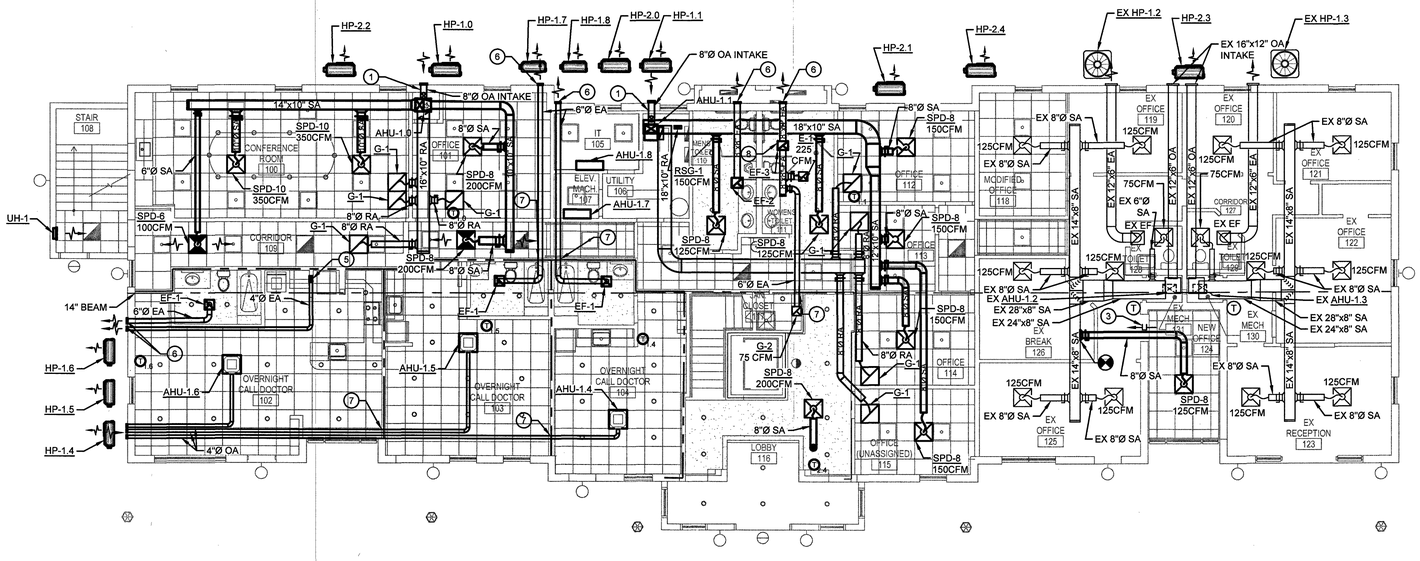

1 MECHANICAL FIRST FLOOR PLAN
SCALE: 1/8" = 1'-0"

GENERAL NOTES

1. CONTRACTOR SHALL FIELD VERIFY EXISTING CONDITIONS PRIOR TO START OF ANY WORK AND ADVISE ENGINEER OF ANY DISCREPANCIES.
2. PROVIDE BALANCING DAMPER ON EVERY BRANCH DUCT EVEN IF NOT SHOWN ON PLANS. PLACE BALANCING DAMPERS AS FAR FROM SUPPLY AIR DEVICE AS POSSIBLE. BALANCING DAMPERS THAT ARE ACCESSIBLE SHALL BE SINGLE HANDLE POSITIVE LOCKING TYPE MADE BY ROSSI OR APPROVED EQUAL. PROVIDE YOUNG REGULATOR REMOTE BALANCING DAMPER FOR AREAS WITHOUT ACCESS TO DAMPER SUCH AS ABOVE GWB CEILINGS.
3. BALANCE AIR FLOWS TO CFM VALUES LISTED ON THIS SHEET. BALANCE OUTSIDE AIR TO CFM VALUES LISTED ON THE VENTILATION SCHEDULES.
4. INSULATE ALL DUCTWORK PER SPECIFICATIONS.
5. REFRIGERANT LINE LENGTH BETWEEN INDOOR AIR HANDLING UNIT AND OUTSIDE HEAT PUMP UNIT SHALL BE LESS THAN MANUFACTURER'S MAXIMUM ALLOWABLE DISTANCE. CONTRACTOR TO VERIFY LINE LENGTH BETWEEN VRF ROOF LOCATION AND INDOOR LOCATION OF FAN COIL UNITS PRIOR TO INSTALL OF UNITS. IF LINE LENGTH IS FARTHER THAN MANUFACTURER'S MAXIMUM ALLOWABLE LINE LENGTH, CONTACT ENGINEER WITH ALTERNATE LOCATIONS OF UNITS WITHIN MANUFACTURER'S ALLOWABLE LINE LENGTHS FOR APPROVAL BEFORE PROCEEDING.
6. REFRIGERANT PIPE(S) SIZES SHALL BE DETERMINED BY THE COMPRESSORIZED EQUIPMENT MANUFACTURER OR THEIR REPRESENTATIVE, WHO SHALL ALSO DETERMINE THE NEED FOR DOUBLE SUCTION PIPE RISERS, ACCUMULATORS AND OTHER APPURTENANCES REQUIRED FOR PROPER LONG TERM OPERATION OF THE EQUIPMENT. REFRIGERANT PIPE(S) SIZING AND ROUTING SHALL MEET ALL SYSTEM OPERATING CONDITIONS. THE CONTRACTOR SHALL PROVIDED TO THE OWNER AND ENGINEER LETTERS AND DRAWINGS THAT ADEQUATELY DEPICT THE REFRIGERANT PIPING AND COMPONENTS, AND INDICATE THE RECOMMENDATIONS PROVIDED TO THEM BY THE MANUFACTURER OR THEIR REPRESENTATIVE.
7. ALL CONDENSATE DRAINS SHALL BE TRAPPED. PROVIDE CLEANOUT OF CONDENSATE DRAINS.
8. COORDINATE THERMOSTAT LOCATIONS WITH OWNER IN FIELD.
9. CONNECTIONS TO DIFFUSERS SHALL BE MADE IN ACCORDANCE WITH DIFFUSER INSTALLATION DETAIL ON SHEET M300. CONTRACTOR SHALL INSTALL IN A MANNER SUCH THAT THERE SHALL BE NO AIRFLOW CONSTRICTIONS. USE RIGID DUCTWORK WHERE POSSIBLE. FLEXIBLE DUCTWORK SHALL BE LIMITED TO LESS THAN 5' AND INSTALLED IN A FULLY EXTENDED MANNER.

DRAWING NOTES

1. PROVIDE AIR INLET OPENINGS WITH A BACKDRAFT DAMPER. INSTALL OUTSIDE AIR DUCT DOWN TO MIXING BOX BELOW AHU.
2. INSTALL DUCTWORK IN ATTIC ABOVE. INSTALL SUPPLY AND RETURN DUCTS IN TRUSS CAVITY IN STACKED FASHION. SEE TYPICAL SECTION ON THIS SHEET.
3. FIX THE TOP SASH OF THIS WINDOW TO MAINTAIN 3FT CLEARANCE FROM EXHAUST OUTLET TO OPERABLE PORTION OF THE WINDOW.
4. UNDERCUT DOOR BY 1" TO FACILITATE RETURN AIR PATH.
5. RECESSED DRYER VENT BOX. SEE DETAIL ON SHEET M300.
6. PROVIDE EXHAUST AIR OPENINGS WITH CORROSION RESISTANT WALL MOUNTED VENT HOOD.
7. PROVIDE AND INSTALL FIRE DAMPER IN DUCTWORK PENETRATING 2 HOUR FIRE RATED ASSEMBLIES.
8. PROVIDE 24" x 24" ACCESS PANEL TO ALLOW ACCESS FOR EF-3.
9. TERMINATE OUTDOOR AIR INTAKE ABOVE ROOF PENETRATION WITH GOOSENECK.

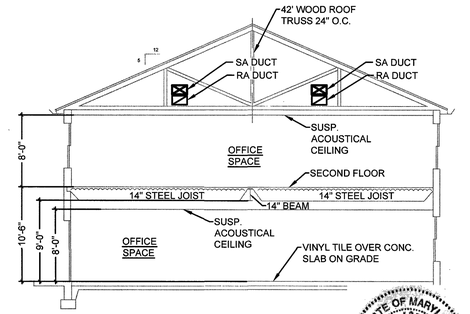

3 TYPICAL BUILDING SECTION
SCALE: 1/8" = 1'-0"

"I certify that these documents were prepared or approved by me, and that I am a duly licensed Engineer in the State of Maryland, License Number 39052, Expiration Date 12/23/2026."

GRAPHICAL SCALE
0 4' 8' 16' 24'
1/8"=1'-0"

MEP Engineer
Abramson Engineering
3655-B Old Court Rd, Suite 24
Baltimore, MD 21208
(410) 259-9461

REVISIONS
1 3/30/2026 PERMIT SET

RENOVATION OF UNIVERSITY OF MARYLAND
MEDICAL CENTER OFFICE BUILDING
616 CHARLES STREET
LA PLATA, MARYLAND 20646

R.L. LITTEN & ASSOCIATES, ARCHITECTS, LLC
300 CHARLES STREET, SUITE 4
P.O. BOX 1920, LAPLATA, MD 20646 (301) 934-1471

DRAWN BY: AT
CHK'D BY: SA
PROJECT NO: 25-420

M100

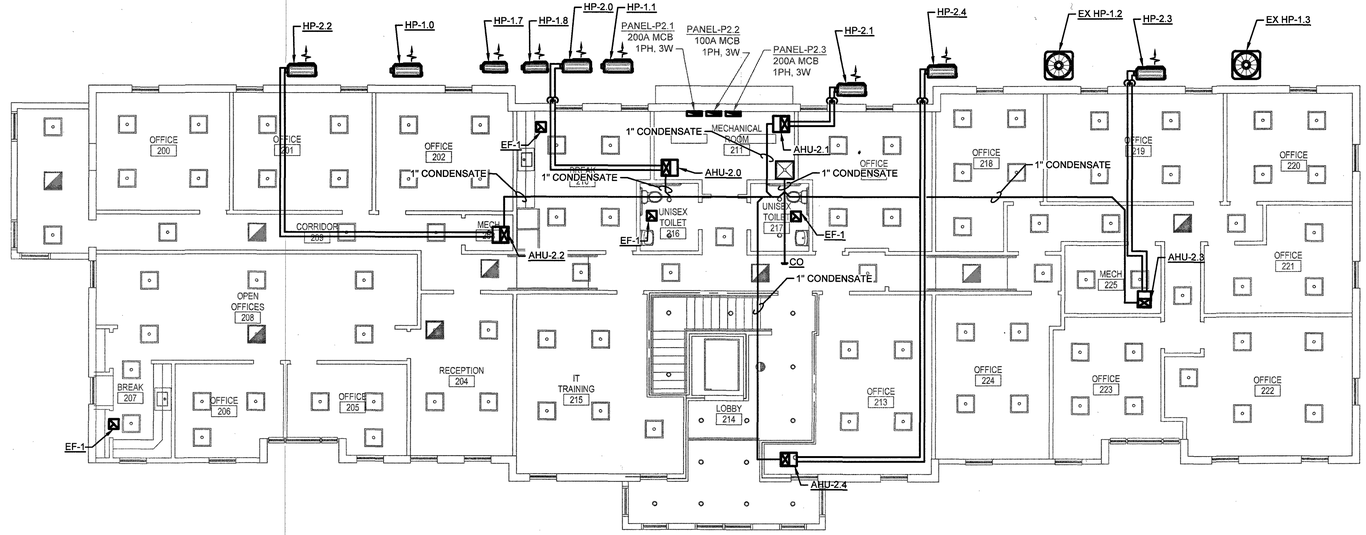

2 MECHANICAL SECOND FLOOR PLAN
SCALE: 1/8" = 1'-0"

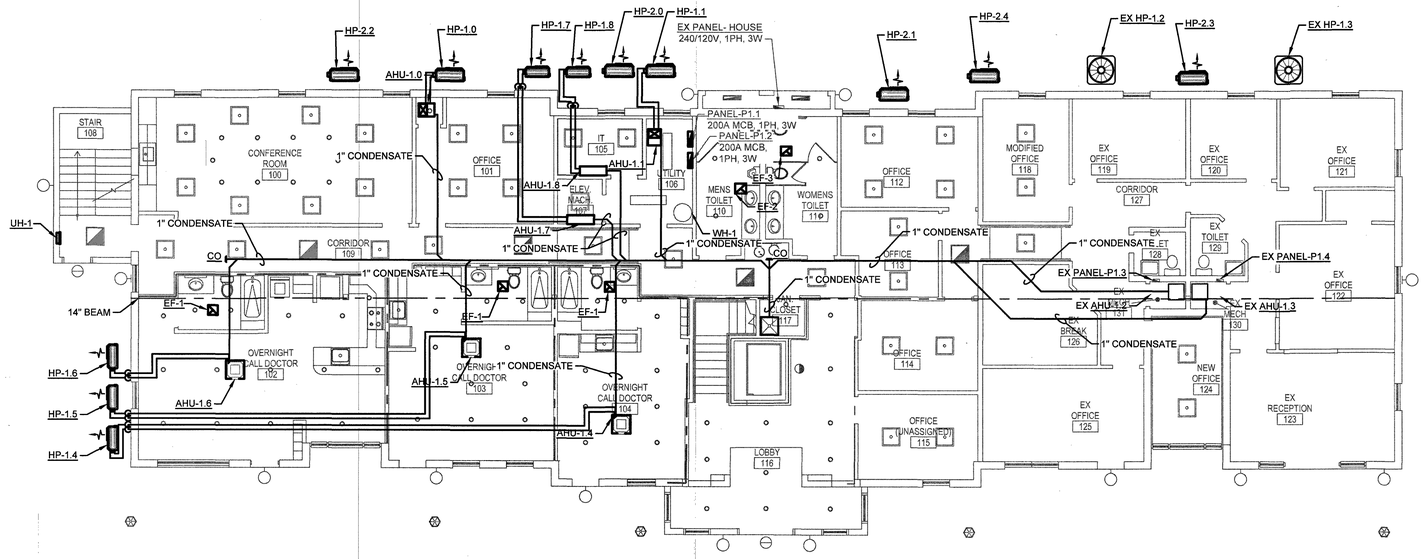

1 MECHANICAL FIRST FLOOR PLAN
SCALE: 1/8" = 1'-0"

GENERAL NOTES

1. CONTRACTOR SHALL FIELD VERIFY EXISTING CONDITIONS PRIOR TO START OF ANY WORK AND ADVISE ENGINEER OF ANY DISCREPANCIES..
2. INSULATE ALL PIPING PER SPECIFICATIONS.
3. REFRIGERANT LINE LENGTH BETWEEN INDOOR AIR HANDLING UNIT AND OUTSIDE HEAT PUMP UNIT SHALL BE LESS THAN MANUFACTURER'S MAXIMUM ALLOWABLE DISTANCE. CONTRACTOR TO VERIFY LINE LENGTH BETWEEN VRF ROOF LOCATION AND INDOOR LOCATION OF FAN COIL UNITS PRIOR TO INSTALL OF UNITS. IF LINE LENGTH IS FARTHER THAN MANUFACTURER'S MAXIMUM ALLOWABLE LINE LENGTH, CONTACT ENGINEER WITH ALTERNATE LOCATIONS OF UNITS WITHIN MANUFACTURER'S ALLOWABLE LINE LENGTHS FOR APPROVAL BEFORE PROCEEDING.
4. REFRIGERANT PIPE(S) SIZES SHALL BE DETERMINED BY THE COMPRESSORIZED EQUIPMENT MANUFACTURER OR THEIR REPRESENTATIVE, WHO SHALL ALSO DETERMINE THE NEED FOR DOUBLE SUCTION PIPE RISERS, ACCUMULATORS AND OTHER APPURTENANCES REQUIRED FOR PROPER LONG TERM OPERATION OF THE EQUIPMENT. REFRIGERANT PIPE(S) SIZING AND ROUTING SHALL MEET ALL SYSTEM OPERATING CONDITIONS. THE CONTRACTOR SHALL PROVIDED TO THE OWNER AND ENGINEER LETTERS AND DRAWINGS THAT ADEQUATELY DEPICT THE REFRIGERANT PIPING AND COMPONENTS, AND INDICATE THE RECOMMENDATIONS PROVIDED TO THEM BY THE MANUFACTURER OR THEIR REPRESENTATIVE.
5. ALL CONDENSATE DRAINS SHALL BE TRAPPED. PROVIDE CLEANOUT OF CONDENSATE DRAINS.

REVISIONS
- 3/30/2026 PERMIT SET

RENOVATION OF UNIVERSITY OF MARYLAND MEDICAL CENTER OFFICE BUILDING

616 CHARLES STREET
LA PLATA, MARYLAND 20646

R.L. LITTEN & ASSOCIATES, ARCHITECTS, LLC
300 CHARLES STREET, SUITE 4
P.O. BOX 1920, LAPLATA, MD 20646 (301) 934-1471

STATE OF MARYLAND
STEVEN A. ABRAMSON
No. 39052
PROFESSIONAL ENGINEER

"I certify that these documents were prepared or approved by me, and that I am a duly licensed Engineer in the State of Maryland, License Number 39052, Expiration Date 12/23/2026."

GRAPHICAL SCALE
0 4' 8' 16' 24'
1/8"=1'-0"

MEP Engineer
Abramson Engineering
3655-B Old Court Rd, Suite 24
Baltimore, MD 21208
(410) 259-9461

DRAWN BY: AT
CHK'D BY: SA

PROJECT NO: 25-420

M200

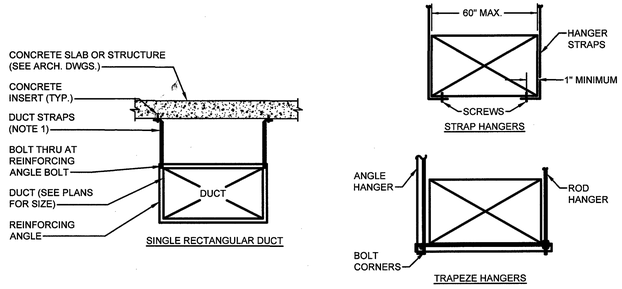

NOTES:
1. FOR HANGERS SIZE AND SPACING, SEE SMACNA HVAC RECTANGULAR DUCT HANGERS MINIMUM SIZE TABLE 5-1.
2. FOR UPPER ATTACHMENT TO BUILDING, SEE SMACNA HVAC FIG. 5-2, FIG. 5-3, AND FIG. 5-4 WITH SPECIFIC BUILDING STRUCTURAL ENGINEER APPROVAL. FOR LOWER HANGER ATTACHMENTS, SEE SMACNA HVAC FIG. 5-5.

3 RECTANGULAR DUCT SUPPORT & HANGER DETAIL

SCALE: NTS

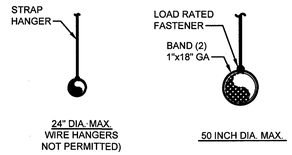

NOTES:
1. SUPPORT HANGERS FROM STRUCTURAL STEEL.
2. FOR HANGER SIZE AND SPACING, SEE SMACNA HVAC MINIMUM HANGER SIZES FOR ROUND DUCT TABLE 5-2.
3. FOR UPPER ATTACHMENT TO BUILDING SEE SMACNA HVAC FIG. 5-2, FIG. 5-3, AND FIG 5-4. FOR LOWER SUPPORTS SEE SMACNA HVAC FIG. 5-5.
4. MAINTAIN INTEGRITY OF INSULATION VAPOR BARRIER THROUGHOUT.
5. PROVIDE RIGID SUPPORT INSERTS FOR INSULATED DUCTWORK.

4 ROUND DUCT SUPPORT & HANGER DETAIL

SCALE: NTS

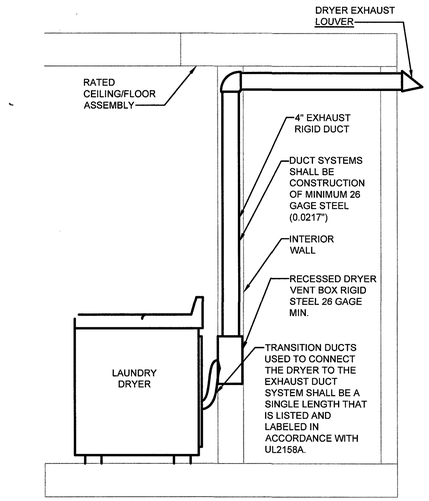

NOTES:
1. 4" DRYER EXHAUST VENT DUCT SHALL BE INSTALLED VERTICALLY INSIDE OF INTERIOR WALL DIRECTLY BEHIND DRYER.
2. ALL THROUGH PENETRATIONS SHALL CONFORM TO IBC 714.4.1.2

1 DRYER EXHAUST DETAIL

SCALE: NTS

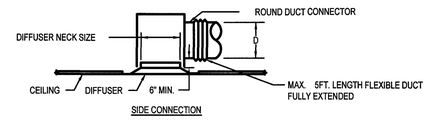

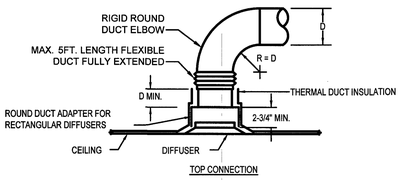

NOTES:
1. IF THERE IS INSUFFICIENT HEADROOM FOR TOP CONNECTION AS DETAILED, USE SIDE CONNECTION.

6 CEILING DIFFUSER INSTALLATION

SCALE: NTS

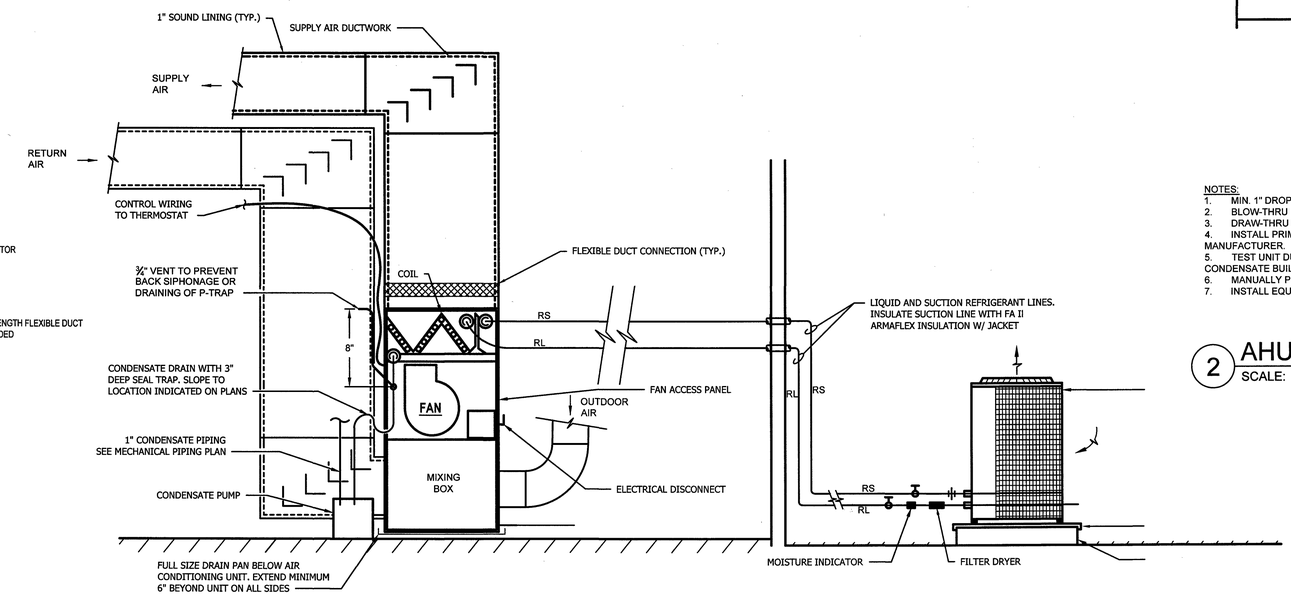

5 VERTICAL HEAT PUMP SYSTEM DETAIL

SCALE: NTS

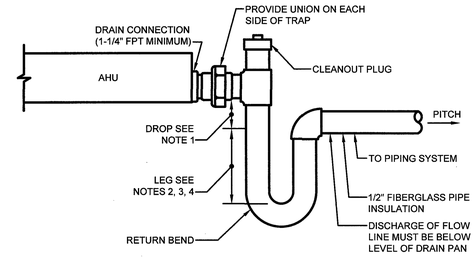

NOTES:
1. MIN. 1" DROP REQUIRED. IF DRAW THRU, DROP=NEGATIVE STATIC PRESSURE AT FAN INLET.
2. BLOW-THRU UNIT: LEG=ONE HALF NEGATIVE INTERNAL STATIC PRESSURE AT FAN INLET + 1".
3. DRAW-THRU UNIT: LEG=ONE HALF NEGATIVE INTERNAL STATIC PRESSURE AT FAN INLET + 1".
4. INSTALL PRIMARY DRAIN TRAP PER MANUFACTURER'S RECOMMENDATIONS WITH LEG SIZED PER FC MANUFACTURER.
5. TEST UNIT DURING START-UP FOR PROPER PUMP AND DISCHARGE OF CONDENSATE WITH NO LEAKS OR CONDENSATE BUILD UP IN THE UNITS DRAIN PAN.
6. MANUALLY PRIME FILL TRAP BEFORE START-UP TO FORM INITIAL DRAIN SEAL.
7. INSTALL EQUIPMENT ON HOUSE KEEPING PAD TO ALLOW SUFFICIENT SPACE BELOW DRAIN PAN FOR TRAP.

2 AHU CONDENSATE TRAP DETAIL

SCALE: NTS

"I certify that these documents were prepared or approved by me, and that I am a duly licensed Engineer in the State of Maryland, License Number 39052, Expiration Date 12/23/2026."

MEP Engineer
Abramson Engineering
3655-B Old Court Rd, Suite 24
Baltimore, MD 21208
(410) 259-9461

REVISIONS
- 3/30/2026 PERMIT SET

RENOVATION OF UNIVERSITY OF MARYLAND
MEDICAL CENTER OFFICE BUILDING
616 CHARLES STREET
LA PLATA, MARYLAND 20646

R.L. LITTEN & ASSOCIATES, ARCHITECTS, LLC
300 CHARLES STREET, SUITE 4
P.O. BOX 1920, LAPLATA, MD 20646 (301) 934-1471

DRAWN BY: AT
CHK'D BY: SA

PROJECT NO: 25-420

M300

VENTILATION & AIRFLOW SCHEDULE - AHU-2.1

AREA SERVED	TYPE OF OCCUPANCY	OCCUPIED FLOOR AREA [FT²]	OCCUPANT DENSITY [# PPL/1000FT²]	PEOPLE OA RATE R_p[CFM/PERSON]	AREA OA RATE R_a [CFM/FT²]	ACTUAL OCC. LOAD [# PPL]	BREATHING ZONE OA RATE V_{bz} [CFM]	ZONE DISTRIBUTION EFFECTIVENESS Ez	ZONE OA RATE V_{oz} [CFM]	ZONE SUPPLY AIR V_{pz} [CFM]	OUTDOOR AIR FRACTION V_p [CFM]	REQ'D. EXHAUST [CFM]
212 - OFFICE	OFFICE	219	5	5	0.06	1	19	0.8	24	200	12%	0
218 - OFFICE	OFFICE	185	5	5	0.06	1	16	0.8	20	175	11%	0
219 - OFFICE	OFFICE	236	5	5	0.06	1	20	0.8	25	225	11%	0
220 - OFFICE	OFFICE	168	5	5	0.06	1	14	0.8	18	175	10%	0
221 - OFFICE	OFFICE	168	5	5	0.06	1	14	0.8	18	175	10%	0
209 - CORRIDOR	CORRIDOR	328	-	-	0.06	-	20	0.8	25	400	6%	0
217 - UNISEX TOILET	RESTROOM	49	-	-	-	-	-	-	-	-	-	98
Totals		1353				4.88	103		130	1350	12%	98
								Uncorrected OA V_{ou}=	130			4.0 TON
	SQFT/TON	338						Correction Factor E_v=	1.0			338 CFM/TON
								V_{ot} Code Required OA=	**130**			10% of OA

NOTES:

1. SUMMER MIXED AIR TEMP BASED ON AMBIENT 95°F/78°F, DB/WB AND INDOOR 72°F/62°F, DB/WB
2. WINTER MIXED AIR TEMP BASED ON AMBIENT 17°F DB AND INDOOR 68°F DB.

MIXED AIR CONDITIONS

SUMMER	74.21 °F DB
	63.54 °F WB
WINTER	63.09 °F DB

VENTILATION & AIRFLOW SCHEDULE - AHU-2.2

AREA SERVED	TYPE OF OCCUPANCY	OCCUPIED FLOOR AREA [FT²]	OCCUPANT DENSITY [# PPL/1000FT²]	PEOPLE OA RATE R_p[CFM/PERSON]	AREA OA RATE R_a [CFM/FT²]	ACTUAL OCC. LOAD [# PPL]	BREATHING ZONE OA RATE V_{bz} [CFM]	ZONE DISTRIBUTION EFFECTIVENESS Ez	ZONE OA RATE V_{oz} [CFM]	ZONE SUPPLY AIR V_{pz} [CFM]	OUTDOOR AIR FRACTION V_p [CFM]	REQ'D. EXHAUST [CFM]
215 - IT TRAINING	CLASSROOM	321	35	10	0.12	11	151	0.8	189	650	29%	0
205 - OFFICE	OFFICE	124	5	5	0.06	1	11	0.8	14	150	9%	0
206 - OFFICE	OFFICE	132	5	5	0.06	1	11	0.8	14	150	9%	0
208 - OPEN OFFICES	OFFICE	501	5	5	0.06	3	43	0.8	54	450	12%	0
204 - RECEPTION	OFFICE	201	5	5	0.06	1	17	0.8	21	200	11%	0
Totals		1279				16.025	233		292	1600	29%	0
								Uncorrected OA V_{ou}=	292			4.0 TON
	SQFT/TON	320						Correction Factor E_v=	0.8			400 CFM/TON
								V_{ot} Code Required OA=	**365**			23% of OA

NOTES:

1. SUMMER MIXED AIR TEMP BASED ON AMBIENT 95°F/78°F, DB/WB AND INDOOR 72°F/62°F, DB/WB
2. WINTER MIXED AIR TEMP BASED ON AMBIENT 17°F DB AND INDOOR 68°F DB.

MIXED AIR CONDITIONS

SUMMER	77.25 °F DB
	65.65 °F WB
WINTER	56.37 °F DB

VENTILATION & AIRFLOW SCHEDULE - AHU-2.3

AREA SERVED	TYPE OF OCCUPANCY	OCCUPIED FLOOR AREA [FT²]	OCCUPANT DENSITY [# PPL/1000FT²]	PEOPLE OA RATE R_p[CFM/PERSON]	AREA OA RATE R_a [CFM/FT²]	ACTUAL OCC. LOAD [# PPL]	BREATHING ZONE OA RATE V_{bz} [CFM]	ZONE DISTRIBUTION EFFECTIVENESS Ez	ZONE OA RATE V_{oz} [CFM]	ZONE SUPPLY AIR V_{pz} [CFM]	OUTDOOR AIR FRACTION V_p [CFM]	REQ'D. EXHAUST [CFM]
222 - OFFICE	OFFICE	294	5	5	0.06	1	25	0.8	31	300	10%	0
223 - OFFICE	OFFICE	179	5	5	0.06	1	15	0.8	19	200	10%	0
224 - OFFICE	OFFICE	237	5	5	0.06	1	20	0.8	25	250	10%	0
213 - OFFICE	OFFICE	241	5	5	0.06	1	20	0.8	25	250	10%	0
Totals		951				5	80		100	1000	10%	0
								Uncorrected OA V_{ou}=	100			3.0 TON
	SQFT/TON	317						Correction Factor E_v=	1.0			333 CFM/TON
								V_{ot} Code Required OA=	**100**			10% of OA

NOTES:

1. SUMMER MIXED AIR TEMP BASED ON AMBIENT 95°F/78°F, DB/WB AND INDOOR 72°F/62°F, DB/WB
2. WINTER MIXED AIR TEMP BASED ON AMBIENT 17°F DB AND INDOOR 68°F DB.

MIXED AIR CONDITIONS

SUMMER	74.30 °F DB
	63.60 °F WB
WINTER	62.90 °F DB

VENTILATION & AIRFLOW SCHEDULE - AHU-2.4

AREA SERVED	TYPE OF OCCUPANCY	OCCUPIED FLOOR AREA [FT²]	OCCUPANT DENSITY [# PPL/1000FT²]	PEOPLE OA RATE R_p[CFM/PERSON]	AREA OA RATE R_a [CFM/FT²]	ACTUAL OCC. LOAD [# PPL]	BREATHING ZONE OA RATE V_{bz} [CFM]	ZONE DISTRIBUTION EFFECTIVENESS Ez	ZONE OA RATE V_{oz} [CFM]	ZONE SUPPLY AIR V_{pz} [CFM]	OUTDOOR AIR FRACTION V_p [CFM]	REQ'D. EXHAUST [CFM]
LOBBY DOWNSTAIRS	LOBBY	338	10	5	0.06	3	37	0.8	46	600	8%	0
LOBBY UPSTAIRS	LOBBY	207	10	5	0.06	2	23	0.8	29	600	5%	0
Totals		545				5	60		75	1200	8%	0
								Uncorrected OA V_{ou}=	75			3.0 TON
	SQFT/TON	182						Correction Factor E_v=	1.0			400 CFM/TON
								V_{ot} Code Required OA=	**75**			6% of OA

NOTES:

1. SUMMER MIXED AIR TEMP BASED ON AMBIENT 95°F/78°F, DB/WB AND INDOOR 72°F/62°F, DB/WB
2. WINTER MIXED AIR TEMP BASED ON AMBIENT 17°F DB AND INDOOR 68°F DB.

MIXED AIR CONDITIONS

SUMMER	73.44 °F DB
	63.00 °F WB
WINTER	64.81 °F DB

UNIT HEATER SCHEDULE

UNIT NO.	SERVICE	CAPACITY [KW]	TYPE	SIZE [HxWxD] - IN	AIRFLOW [CFM]	ELECTRICAL V/PH/HZ	NOTES	MANUFACTURER & MODEL NO.
UH-1	108 - STAIR	4	RECESSED CABINET	18.25"x14.3"x3.75"	100	240/1/60	1-4	QMARK, CWH3404F

NOTES:

1. HORIZONTAL DISCHARGE
2. BUILT IN THERMOSTAT
3. RECESSED ROUGH-IN BACK BOX
4. ARCHITECT TO SELECT COLOR AND FINISH

VENTILATION SCHEDULE - OVERNIGHT CALL ROOMS

AREA SERVED	OCCUPIED FLOOR AREA [FT²]	NUMBER OF BEDROOMS [#]	REQUIRED OUTDOOR AIR [CFM]
102 - OVERNIGHT CALL	537	1	31
103 - OVERNIGHT CALL	388	1	27
104 - OVERNIGHT CALL	314	1	24

VENTILATION & AIRFLOW SCHEDULE - AHU-1.0

AREA SERVED	TYPE OF OCCUPANCY	OCCUPIED FLOOR AREA [FT²]	OCCUPANT DENSITY [# PPL/1000FT²]	PEOPLE OA RATE R_p[CFM/PERSON]	AREA OA RATE R_a [CFM/FT²]	ACTUAL OCC. LOAD [# PPL]	BREATHING ZONE OA RATE V_{bz} [CFM]	ZONE DISTRIBUTION EFFECTIVENESS Ez	ZONE OA RATE V_{oz} [CFM]	ZONE SUPPLY AIR V_{pz} [CFM]	OUTDOOR AIR FRACTION V_p [CFM]	REQ'D. EXHAUST [CFM]
100 - CONFERENCE ROOM	CONFERENCE ROOM	422	50	5	0.06	21	131	0.8	164	700	23%	0
109 - CORRIDOR	CORRIDOR	396	-	-	0.06	-	-	0.8	-	300	-	0
101 - OFFICE	OFFICE	215	5	5	0.06	1	18	0.8	23	200	12%	0
Totals		1033				22.175	149		187	1200	23%	0
								Uncorrected OA V_{ou}=	187			3.0 TON
	SQFT/TON	344						Correction Factor E_v=	0.9			400 CFM/TON
								V_{ot} Code Required OA=	**208**			17% of OA

NOTES:

1. SUMMER MIXED AIR TEMP BASED ON AMBIENT 95°F/78°F, DB/WB AND INDOOR 72°F/62°F, DB/WB
2. WINTER MIXED AIR TEMP BASED ON AMBIENT 17°F DB AND INDOOR 68°F DB.

MIXED AIR CONDITIONS

SUMMER	75.99 °F DB
	64.77 °F WB
WINTER	59.16 °F DB

VENTILATION & AIRFLOW SCHEDULE - AHU-1.1

AREA SERVED	TYPE OF OCCUPANCY	OCCUPIED FLOOR AREA [FT²]	OCCUPANT DENSITY [# PPL/1000FT²]	PEOPLE OA RATE R_p[CFM/PERSON]	AREA OA RATE R_a [CFM/FT²]	ACTUAL OCC. LOAD [# PPL]	BREATHING ZONE OA RATE V_{bz} [CFM]	ZONE DISTRIBUTION EFFECTIVENESS Ez	ZONE OA RATE V_{oz} [CFM]	ZONE SUPPLY AIR V_{pz} [CFM]	OUTDOOR AIR FRACTION V_p [CFM]	REQ'D. EXHAUST [CFM]
115 - OFFICE	OFFICE	127	5	5	0.06	1	11	0.8	14	150	9%	0
112 - OFFICE	OFFICE	155	5	5	0.06	1	13	0.8	16	150	11%	0
113 - OFFICE	OFFICE	95	5	5	0.06	1	11	0.8	14	150	9%	0
114 - OFFICE	OFFICE	132	5	5	0.06	1	11	0.8	14	150	9%	0
106 - UTILITY	STORAGE	181	-	-	0.12	-	-	-	-	150	-	0
110 - MENS TOILET	RESTROOM	106	-	-	-	0	-	-	-	125	-	212
111 - WOMENS TOILET	RESTROOM	119	-	-	-	0	-	-	-	125	-	238
Totals		915				3.07	46		58	1000	11%	450
								Uncorrected OA V_{ou}=	58			3.0 TON
	SQFT/TON	305						Correction Factor E_v=	1.0			333 CFM/TON
								V_{ot} Code Required OA=	**58**			6% of OA

NOTES:

1. SUMMER MIXED AIR TEMP BASED ON AMBIENT 95°F/78°F, DB/WB AND INDOOR 72°F/62°F, DB/WB
2. WINTER MIXED AIR TEMP BASED ON AMBIENT 17°F DB AND INDOOR 68°F DB.

MIXED AIR CONDITIONS

SUMMER	73.33 °F DB
	62.93 °F WB
WINTER	65.04 °F DB

VENTILATION & AIRFLOW SCHEDULE - AHU-2.0

AREA SERVED	TYPE OF OCCUPANCY	OCCUPIED FLOOR AREA [FT²]	OCCUPANT DENSITY [# PPL/1000FT²]	PEOPLE OA RATE R_p[CFM/PERSON]	AREA OA RATE R_a [CFM/FT²]	ACTUAL OCC. LOAD [# PPL]	BREATHING ZONE OA RATE V_{bz} [CFM]	ZONE DISTRIBUTION EFFECTIVENESS Ez	ZONE OA RATE V_{oz} [CFM]	ZONE SUPPLY AIR V_{pz} [CFM]	OUTDOOR AIR FRACTION V_p [CFM]	REQ'D. EXHAUST [CFM]
210 - BREAK	BREAK ROOM	219	50	5	0.12	11	81	0.8	101	375	27%	0
200 - OFFICE	OFFICE	195	5	5	0.06	1	17	0.8	21	175	12%	0
201 - OFFICE	OFFICE	203	5	5	0.06	1	17	0.8	21	200	11%	0
202 - OFFICE	OFFICE	199	5	5	0.06	1	17	0.8	21	200	11%	0
209 - CORRIDOR	CORRIDOR	328	-	-	0.06	-	20	0.8	25	200	13%	0
216 - UNISEX TOILET	RESTROOM	49	-	-	-	-	-	-	-	-	-	98
Totals		1193				13.935	152		189	1150	27%	98
								Uncorrected OA V_{ou}=	189			4.0 TON
	SQFT/TON	298						Correction Factor E_v=	0.8			288 CFM/TON
								V_{ot} Code Required OA=	**237**			21% of OA

NOTES:

1. SUMMER MIXED AIR TEMP BASED ON AMBIENT 95°F/78°F, DB/WB AND INDOOR 72°F/62°F, DB/WB
2. WINTER MIXED AIR TEMP BASED ON AMBIENT 17°F DB AND INDOOR 68°F DB.

MIXED AIR CONDITIONS

SUMMER	76.74 °F DB
	65.30 °F WB
WINTER	57.49 °F DB

AIR DEVICE SCHEDULE

UNIT NO.	TYPE	AIRFLOW [CFM]	THROW/SIDE @ 50 FPM [FT]	NC @ MAX AIRFLOW	FACE SIZE [IN]	NECK SIZE [IN]	BLOW PATTERN	MATERIAL	FINISH	SCHEDULE NOTES	MANUFACTURER & MODEL NO.
SPD-6S	SQUARE PLAQUE DIFFUSER	0-61	6	<15	12x12	6"	4-WAY	STEEL	WHITE		PRICE; SPD
SPD-6	SQUARE PLAQUE DIFFUSER	50-119	6	<15	24x24	6"	4-WAY	STEEL	WHITE		PRICE; SPD
SPD-8	SQUARE PLAQUE DIFFUSER	120-244	8	<15	24x24	8"	4-WAY	STEEL	WHITE		PRICE; SPD
SPD-10	SQUARE PLAQUE DIFFUSER	245-382	10	18	24x24	10"	4-WAY	STEEL	WHITE		PRICE; SPD
SPD-12	SQUARE PLAQUE DIFFUSER	383-550	12	21	24x24	12"	4-WAY	STEEL	WHITE		PRICE; SPD
RSG-1	RESIDENTIAL SUPPLY GRILLE	50-250	22	15	10x4	4x10	4-WAY	STEEL	WHITE	1	PRICE; 540
LSD-8	LINER SLOT DIFFUSER	150-225	21	<15	48"	8"	(2) 1" SLOTS	STEEL	WHITE		PRICE; TBDI-3100
G-1	RETURN	0-1200	-	20	24x24	PER PLAN	1/2" SLOTS	STEEL	WHITE	3	PRICE; 535
G-2	EXHAUST	0-350	-	19	12x12	8"	1/2" SLOTS	STEEL	WHITE	3	PRICE; 535

SCHEDULE NOTES:

1. 22.5° THROW
2. (2) 3/4" SLOTS
3. PROVIDE SQUARE TO ROUND ADAPTER
4. 45° DEFLECTION
5. PROVIDE RETURN AIR CANOPY

GENERAL NOTES:

1)THROW & NC VALUES BASED ON MAX CFM.
2) CONTRACTOR TO COORDINATE MOUNTING TYPE.

EXHAUST FAN SCHEDULE

UNIT NO.	SERVICE	AIRFLOW [CFM]	FAN RPM	SP [IN-WG]	DRIVE/ TYPE	ELECTRICAL WATT	ELECTRICAL V/PH/HZ	SONES	SCHEDULE NOTES	MANUFACTURER & MODEL NO.
EF-1	102,103,104,216,217 UNISEX TOILETS, OVERNIGHT CALL ROOMS	110	1356	0.375	DIRECT	17	120/1/60	-	1,2	PANASONIC; FV0511VKS3
EF-2	110 MENS TOILETS	250	1000	0.1	DIRECT	65	120/1/60	2	1,2	GREENHECK; SP-A250
EF-3	111, 117 WOMENS TOILETS/JAN.CLOSET	300	1191	0.4	DIRECT	50	120/1/60	1.3	1,2	GREENHECK; CSP-A390-VG

SCHEDULE NOTES:

1. BACKDRAFT DAMPER
2. EXHAUST FAN TO ENERGIZE WITH LIGHTS.

"I certify that these documents were prepared or approved by me, and that I am a duly licensed Engineer in the State of Maryland, License Number 39052, Expiration Date 12/23/2026."

MEP Engineer
Abramson Engineering
3655-B Old Court Rd, Suite 24
Baltimore, MD 21208
(410) 259-9461

REVISIONS
- 3/30/2026 PERMIT SET

RENOVATION OF UNIVERSITY OF MARYLAND
MEDICAL CENTER OFFICE BUILDING
616 CHARLES STREET
LA PLATA, MARYLAND 20646

R.L. LITTEN & ASSOCIATES, ARCHITECTS, LLC
300 CHARLES STREET, SUITE 4
P.O. BOX 1920, LAPLATA, MD 20646 (301) 934-1471

DRAWN BY: AT
CHK'D BY: SA

PROJECT NO: 25-420

M400

HEAT PUMP SPLIT SYSTEM SCHEDULE

UNIT NO	SERVICE	NOMINAL TONS	REFRIGERANT/ # OF COMP	DX COOLING							HEATING PERFORMANCE AT 47°			HEATING PERFORMANCE AT 17°			INDOOR AHU										OUTDOOR HEAT PUMP					NOTES
				EAT [DB/WB]		LAT [DB]	TOTAL [MBH]	SENSIBLE [MBH]	SEER2	EER2	EAT/LAT [F]	HEAT [MBH]	COP	EAT/LAT [F]	HEAT [MBH]	COP	TYPE	SUPPLY AIRFLOW [CFM]	ESP [IN-WG]	BHP/HP	BACKUP HEAT [KW]	V/PH/HZ	MCA	MOCP [AMP]	WEIGHT (LBS.)	MANUFACTURER & MODEL NO	V/PH/HZ	MCA	MOCP [AMP]	WEIGHT (LBS.)	MANUFACTURER & MODEL NO	
HP-1.0	OFFICES	3.0	R454B	80	67.1	56	42.1	31.2	19.0	12.5	70/98.1	37	3.5	70/94.9	31	1.9	AIR HANDLER	1200	1.0	0.34	8.0	230/1/60	46	50	129.4	CARRIER;45MUHAQ36XX3	230/1/60	29	30	204	CARRIER;37MUHAQ36AA3	1-6
HP-1.1	OFFICES	3.0	R454B	80	67.1	56	42.1	31.2	19.0	12.5	70/98.1	37	3.5	70/94.9	31	1.9	AIR HANDLER	1000	1.0	0.34	8.0	230/1/60	46	50	129.4	CARRIER;45MUHAQ36XX3	230/1/60	29	30	204	CARRIER;37MUHAQ36AA3	1-6
HP-1.4	OVERNIGHT CALL DOCTOR	1.0	R454B	80	67.1	54.7	14.7	11.1	25.5	13.5	96.5	12	3.7	70/94.9	9	1.8	CASSETTE	418	-	0.01	-	230/1/60	POWERED VIA OUTDOOR		35.27	CARRIER; 45MBCAQ12XAE	230/1/60	15	15	72.8	CARRIER;37MAHAQ12AA3	1-3
HP-1.5	OVERNIGHT CALL DOCTOR	1.0	R454B	80	67.1	54.7	14.7	11.1	25.5	13.5	96.5	12	3.7	70/94.9	9	1.8	CASSETTE	418	-	0.01	-	230/1/60	POWERED VIA OUTDOOR		35.27	CARRIER; 45MBCAQ12XAE	230/1/60	15	15	72.8	CARRIER;37MAHAQ12AA3	1-3
HP-1.6	OVERNIGHT CALL DOCTOR	1.5	R454B	80	67.1	50.1	18.7	14.1	20.0	12.5	107.7	18	3.2	70/94.9	15	1.9	CASSETTE	447	-	0.01	-	230/1/60	POWERED VIA OUTDOOR		35.27	CARRIER; 45MBCAQ18XAE	230/1/60	19	20	99.8	CARRIER;37MAHAQ18AA3	1-3
HP-1.7	ELEV MACH ROOM	1.0	R454B	80	67.1	58.7	13.1	9.9	25.5	13.5	70/95.3	12	3.8	70/94.9	10	1.8	WALL MOUNT	441	-	0.01	-	230/1/60	POWERED VIA OUTDOOR		22.9	CARRIER;45MAHAQ12XA3	230/1/60	15	15	72.8	CARRIER;37MAHAQ12AA3	1-3,7
HP-1.8	IT ROOM	1.0	R454B	80	67.1	58.7	13.1	9.9	25.5	13.5	70/95.3	12	3.8	70/94.9	10	1.8	WALL MOUNT	441	-	0.01	-	230/1/60	POWERED VIA OUTDOOR		22.9	CARRIER;45MAHAQ12XA3	230/1/60	15	15	72.8	CARRIER;37MAHAQ12AA3	1-3,7
HP-2.0	OFFICES	4.0	R454B	80	67.1	58.1	51.8	41.5	17.5	12.0	70/94.9	48	3.28	70/94.9	34	2.0	AIR HANDLER	1150	0.8	0.63	8.0	230/1/60	51	60	188.05	CARRIER;45MUHAQ60XX3	230/1/60	38	40	201	CARRIER;37MUHAQ48AA3	1-6
HP-2.1	OFFICES	4.0	R454B	80	67.1	58.1	51.8	41.5	17.5	12.0	70/94.9	48	3.28	70/94.9	34	2.0	AIR HANDLER	1350	0.8	0.63	8.0	230/1/60	51	60	188.05	CARRIER;45MUHAQ60XX3	230/1/60	38	40	201	CARRIER;37MUHAQ48AA3	1-6
HP-2.2	OFFICES	4.0	R454B	80	67.1	58.1	51.8	41.5	17.5	12.0	70/94.9	48	3.28	70/94.9	34	2.0	AIR HANDLER	1600	0.8	0.63	8.0	230/1/60	51	60	188.05	CARRIER;45MUHAQ60XX3	230/1/60	38	40	201	CARRIER;37MUHAQ48AA3	1-6
HP-2.3	OFFICES	3.0	R454B	80	67.1	56	42.1	31.2	19.0	12.5	70/98.1	37	3.5	70/94.9	31	1.9	AIR HANDLER	1000	1.0	0.34	8.0	230/1/60	46	50	129.4	CARRIER;45MUHAQ36XX3	230/1/60	29	30	204	CARRIER;37MUHAQ36AA3	1-6
HP-2.4	LOBBY	3.0	R454B	80	67.1	56	42.1	31.2	19.0	12.5	70/98.1	37	3.5	70/94.9	31	1.9	AIR HANDLER	1200	1.0	0.34	8.0	230/1/60	46	50	129.4	CARRIER;45MUHAQ36XX3	230/1/60	29	30	204	CARRIER;37MUHAQ36AA3	1-6

SCHEDULE NOTES & OPTIONS

1. PROVIDE 4" EQUIPMENT HOUSEKEEPING PAD FOR OUTDOOR UNITS
2. WIRED REMOTE CONTROL 7 DAY PROGRAMMABLE THERMOSTAT KSAC1401AAA
3. ELECTRICAL DISCONNECT REQUIRED FOR OUTDOOR UNIT
4. BACKUP HEAT VIA CARRIER AUXILIARY HEATER ACCESSORY MODLE NUMBER EHKMD08KN
5. CONDENSATE PUMP: BLUE DIAMOND MAXIBLUE WITH RESERVIOR. POWER PUMP DIRECTLY FROM INDOOR UNIT
6. ELECTRICAL DISCONNECT FOR INDOOR UNIT
7. CONDENSATE PUMP: BLUE DIAMOND MICROBLUE. POWER PUMP DIRECTLY FROM INDOOR UNIT

REVISIONS
- 3/30/2026 PERMIT SET

RENOVATION OF UNIVERSITY OF MARYLAND
MEDICAL CENTER OFFICE BUILDING
616 CHARLES STREET
LA PLATA, MARYLAND 20646

R.L. LITTEN & ASSOCIATES, ARCHITECTS, LLC
300 CHARLES STREET, SUITE 4
P.O. BOX 1920, LAPLATA, MD 20646 (301) 934-1471

STATE OF MARYLAND
SHAWN ABRAMSON
No. 39052
PROFESSIONAL ENGINEER

"I certify that these documents were prepared or approved by me, and that I am a duly licensed Engineer in the State of Maryland, License Number 39052, Expiration Date 12/23/2026."

MEP Engineer
Abramson Engineering
3655-B Old Court Rd, Suite 24
Baltimore, MD 21208
(410) 259-9461

DRAWN BY: AT
CHK'D BY: SA
PROJECT NO: 25-420

M401

ELECTRICAL NOTES

DIVISION 26 ELECTRICAL

26-000 - GENERAL REQUIREMENTS

SCOPE & DRAWINGS

1. CONTRACTOR SHALL REFER TO ALL DRAWINGS AND SPECIFICATIONS IN THIS PACKAGE SUCH AS ARCHITECTURAL, STRUCTURAL, ELECTRICAL, AND PLUMBING. FULLY COORDINATE WITH ALL OTHER TRADES, OWNER, AND ARCHITECT REQUIREMENTS. ALL OF THE ABOVE-MENTIONED DRAWINGS AND SPECIFICATIONS ARE CONSIDERED A PART OF THE CONTRACT DOCUMENTS.
2. CONTRACTOR IS TO INSPECT THE SITE BEFORE SUBMITTING BID AND MAKE ALLOWANCES FOR ALL VISIBLE, SPECIFIED OR REASONABLY ANTICIPATED FIELD CONDITIONS. SIGNIFICANT DISCREPANCIES FROM THE DRAWINGS, EXISTING SITE CONDITIONS, SPECIFICATIONS OR OTHER TRADES CONFLICT, ARE TO BE IMMEDIATELY BROUGHT TO THE ATTENTION OF THE OWNER, ARCHITECT AND ENGINEER IN WRITING PRIOR TO SUBMITTAL OF BID.
3. THE DRAWINGS ARE DIAGRAMMATIC IN NATURE AND INDICATE THE GENERAL LOCATION AND INTENT OF THE SYSTEMS. AS SUCH DRAWINGS DO NOT INDICATE EVERY FITTING, ELBOW, OFFSET, VALVE, AND OTHER COMPONENTS NECESSARY TO INSURE PROPER INSTALLATION OF A WORKING SYSTEM. CONTRACTOR SHALL PROVIDE ALL NECESSARY FITTINGS, ACCESSORIES, AND AUXILIARY ITEMS TO INSTALL THE SYSTEM AS DIAGRAMMED.
4. DRAWINGS AND SPECIFICATIONS ARE INTENDED TO SUPPLEMENT EACH OTHER, WHEN IN CONFLICT, THE STRICTEST PROVISION SHALL GOVERN. IF ONE IS MISSING MATERIAL OR LABOR SCOPE, CONTRACTOR SHALL PROVIDE AS IF IT IS MENTIONED IN BOTH.
5. CONTRACTOR SHALL PROVIDE AND INSTALL ALL WORK EQUIPMENT AND MATERIALS AS INDICATED ON THE PROJECT DRAWINGS AND SPECIFICATIONS TO PROVIDE A COMPLETELY OPERATIONAL SYSTEM.
6. PROVIDE ALL SUPERVISION, LABOR, MATERIALS, EQUIPMENT MISCELLANEOUS ITEMS, SERVICES AND ACCESSORIES REQUIRED BY STANDARD INDUSTRY PRACTICE FOR SUCH INSTALLATIONS, AND FOR THE SAFE AND CORRECT OPERATION OF THE ENTIRE INSTALLATION.
7. PRODUCTS SHALL BE INSTALLED IN ACCORDANCE WITH MANUALS, GUIDELINES, OR INSTRUCTIONS FURNISHED BY THE PRODUCT MANUFACTURER.
8. COMPETENT MECHANICS AND SUBCONTRACTORS USING PROPER TOOLS AND EQUIPMENT SHALL PERFORM ALL WORK TO PRODUCE FIRST-QUALITY INSTALLATIONS. ALL WORK SHALL BE NEATLY INSTALLED, ACCESSIBLE FOR MAINTENANCE, AND COMPLETE WITH ALL ACCESSORIES REQUIRED.
9. COORDINATE ALL WORK WITH OTHER TRADES TO ENSURE ALL SYSTEMS FIT IN GIVEN SPACE SUCH AS ABOVE CEILINGS. ALL CEILING HEIGHTS INDICATED ON ARCHITECTURAL AND/OR INTERIOR DESIGN DRAWINGS AS WELL AS MINIMUM CLEARANCES REQUIRED BY LOCAL CODES SHALL BE MAINTAINED THROUGHOUT THE BUILDING.

APPLICABLE CODES

1. ALL WORK AND EQUIPMENT SHALL BE INSTALLED AND COMPLY WITH THE LOCAL CODES. THE CONTRACTOR SHALL COMPLY WITH THE LAWS, ORDINANCES, RULES, AND REGULATIONS OF ALL GOVERNMENTAL AND PUBLIC UTILITY AUTHORITIES HAVING JURISDICTION OF ANY OF THE SYSTEMS SPECIFIED.
2. ALL WORK SHALL CONFORM TO LOCAL AND STATE CODES AND TO APPLICABLE STATE LAWS AND, INCLUDING, BUT NOT LIMITED TO NATIONAL ELECTRIC CODE, IMC, IPC, IECC AND NFPA CODES. WHERE CODE REQUIRES A VARIATION FROM SPECIFIC INFORMATION IN CONTRACT DOCUMENTS, CONTRACTOR SHALL INCLUDE WORK REQUIRED TO COMPLY WITH CODE. CERTAIN CODE-REQUIRED ITEMS ARE MENTIONED IN THESE CRITERIA FOR EMPHASIS OR EXAMPLE ONLY. IDENTIFICATION AND COMPLIANCE WITH ALL APPLICABLE CODES AND REGULATIONS ARE THE CONTRACTOR'S RESPONSIBILITY.
3. CONTRACTOR SHALL OBTAIN AND PAY FOR ALL APPLICABLE PERMITS AND CERTIFICATES OF INSPECTION.
4. ALL WORK SHALL BE DONE IN ACCORDANCE WITH THE REQUIREMENTS OF THE OWNER'S INSURANCE CARRIER, INDUSTRY PRACTICE STANDARDS AND THE AMERICANS WITH DISABILITIES ACT (ADA). ADDITIONALLY, FOOD SERVICE FACILITIES MUST ADHERE TO THE PERTINENT DEPARTMENT OF HEALTH REGULATIONS, SANITARY CODES, AND ALL OTHER APPLICABLE CODES, LAWS, REGULATIONS AND DIRECTIVES.

GENERAL

1. CONTRACTOR SHALL BE RESPONSIBLE FOR CONSTRUCTION MEANS, METHODS, SEQUENCES AND WORKMAN SAFETY.
2. COORDINATE SEQUENCING OF INSTALLATION, PHASING OF EQUIPMENT DEMOLITION, SCHEDULE OF WORK, UTILITY SHUTDOWNS, PARKING, MATERIAL STAGING AND OTHER POTENTIALLY DISRUPTIVE ACTIVITIES WITH BUILDING MANAGEMENT.
3. THE DESIGN AND APPEARANCE OF ALL LIGHT FIXTURES AND EXPOSED CONDUIT WHICH ARE VISIBLE FROM THE PUBLIC AREAS ARE CRITICAL TO THE OVERALL VISUAL EFFECT AND ARE SUBJECT TO DETAILED REVIEW AND APPROVAL BY THE OWNER.
4. FURNISH AND INSTALL SUITABLE AND SUBSTANTIAL HANGERS AND SUPPORTS FOR ALL CONDUIT, PIPING, FLOOR-MOUNTED AND SUSPENDED EQUIPMENT. FASTEN HANGERS DIRECTLY TO BUILDING STRUCTURE AND NOT TO OTHER EQUIPMENT, THE ROOF DECK OR CEILING STRUCTURE.
5. ALL EQUIPMENT SHALL BE UL LISTED OR APPROVED EQUAL. EQUIPMENT SHALL BE BY ONE OF THE FOLLOWING MANUFACTURERS: SQUARE D, EATON, SIEMENS, GENERAL ELECTRIC.
6. IN CASE OF PARTIAL OCCUPANCY OF BUILDING, PERFORM THOSE ITEMS SPECIFICALLY MENTIONED AND OTHER ACTIVITIES THAT PRODUCE OBJECTIONABLE NOISE IN A MANNER PRESCRIBED BY OWNER AND IN A MANNER THAT DOES NOT INTERFERE WITH THE USE OF THE EXISTING FACILITY.
7. CONTRACTOR SHALL REFER TO ARCHITECTURAL PLANS FOR APPROVED FLOOR PLAN DIMENSIONS AND EXACT COMPONENT LOCATIONS. DO NOT SCALE ENGINEERING DRAWINGS.

CUTTING, DRILLING, AND PATCHING

1. ALL CUTTING AND REPAIRING NECESSARY TO THE EXECUTION OF THIS WORK SHALL BE DONE AND REPAIRED BY CONTRACTOR. ALL OPENINGS IN FIRE RATED ENCLOSURES SHALL BE FIRE STOPPED. ALL OPENINGS SHALL BE FINISHED WITH NEAT TRIM OR FLANGES. PATCH AND FINISH AREAS DAMAGED AS A RESULT OF OPENINGS TO MATCH ADJACENT AREAS.
2. ALL OPENINGS MUST BE NEATLY SAW CUT, CORE-BORED, SLEEVED, GROUTED, SEALED AND MADE WATER AND FIREPROOF.
3. CONTRACTOR SHALL OBTAIN WRITTEN STRUCTURAL ENGINEER APPROVAL BEFORE DRILLING OR CUTTING STRUCTURAL COMPONENTS.
4. SEAL ALL OPENINGS AND PENETRATIONS THROUGH FIRE RATED WALLS AND PARTITIONS WITH FIRE RESISTANT SEALANT THAT WILL PREVENT THE PASSAGE OF FIRE AND SMOKE. SEALANT SHALL HAVE RATING EQUAL OR GREATER TO PENETRATED WALL.
5. REFER TO ARCHITECTURAL DRAWINGS FOR EXACT EQUIPMENT LOCATIONS BEFORE CUTTING.
6. ALL ROOF PENETRATIONS SHALL BE COMPLETED BY ROOFER OF RECORD SO AS NOT TO VOID THE WARRANTY. PROVIDE CURBS AT LEAST 12" HIGH FROM THE TOP OF THE FINISHED ROOF, FOR ALL ROOF OPENINGS AND EQUIPMENT MOUNTING. SUPPORT CURBS ON STRUCTURAL MEMBERS AND FLASH INTO ROOFING FOR WATER TIGHT SEAL.

EXISTING CONDITIONS

1. WHEN EXISTING WORK IS REMOVED, PIPES AND CONDUITS SHALL BE REMOVED, INCLUDING HANGERS, TO A POINT BELOW FINISHED FLOORS OR BEHIND FINISHED WALLS AND CAPPED. SUCH POINT SHALL BE FAR ENOUGH BEHIND FINISHED SURFACES TO ALLOW FOR INSTALLATION OF NORMAL THICKNESS OF REQUIRED FINISH MATERIAL. EQUIPMENT SHALL BE REMOVED AND NOT ABANDONED IN PLACE UNLESS OTHERWISE NOTED. AS REQUESTED BY OWNER, EXISTING EQUIPMENT SHALL REMAIN THEIR PROPERTY AND BE DELIVERED TO THEM ON THE PREMISES WHERE DIRECTED. ALL OTHER MATERIALS AND EQUIPMENT THAT ARE REMOVED SHALL BECOME PROPERTY OF THE CONTRACTOR AND SHALL BE PROMPTLY REMOVED AND DISPOSED OF IN AN APPROVED MANNER.
2. WHEN WORK SPECIFIED CONNECTS TO EXISTING EQUIPMENT, PERFORM ALL NECESSARY ALTERATIONS, CUTTINGS, FITTINGS, ETC., OF EXISTING WORK AS MAY BE NECESSARY TO MAKE SATISFACTORY CONNECTIONS BETWEEN NEW AND EXISTING WORK, AND TO LEAVE COMPLETED WORK IN A FINISHED AND WORKMANLIKE CONDITION.
3. REMOVAL AND RELOCATION OF SOME EXISTING COMPONENTS MAY BE NECESSARY FOR THE COMPLETION OF THIS SCOPE. NOT ALL EXISTING CONDITIONS CAN BE COMPLETELY DETAILED ON THE DRAWINGS AND AS SUCH THE CONTRACTOR SHALL SURVEY THE SITE PRIOR TO BIDDING.
4. WHEN THE WORK REQUIRES RELOCATION OF EXISTING EQUIPMENT, PERFORM ALL WORK AND MAKE NECESSARY CHANGES TO EXISTING WORK AS MAY BE REQUIRED TO LEAVE COMPLETED WORK IN A FINISHED AND WORKMANLIKE CONDITION. WHERE EXISTING INSULATION IS DISTURBED, REPLACE INSULATION WHERE REMOVED OR DAMAGED EQUAL TO EXISTING, IN TYPE THICKNESS AND R VALUE.
5. ENGINEER HAS NOT FUNCTIONALLY TESTED EXISTING EQUIPMENT. WHERE EXISTING EQUIPMENT IS TO BE REUSED, CONTRACTOR SHALL ALLOW FOR REASONABLE CHECKING, ADJUSTMENT AND MINOR REPAIR TO RESTORE FULL FUNCTION. WORK WHICH IS REQUIRED AND WHICH IS BEYOND THAT DESCRIBED ABOVE OR ON THE PLANS SHALL BE BROUGHT TO THE ATTENTION OF THE OWNER, ARCHITECT AND ENGINEER.
6. OWNER IS RESPONSIBLE FOR ASBESTOS AND ANY OTHER HAZARDOUS MATERIALS. SHOULD ANY BE DISCOVERED THAT HAS NOT BEEN REMOVED, DELAY WORK IN AFFECTED AREA AND CONTACT OWNER FOR DIRECTION.

SITE PROTECTION AND CLEAN UP

1. THE CONTRACTOR SHALL PROVIDE FOR HIS OWN CLEAN UP, REMOVAL AND DISPOSAL OF DAILY TRASH. THE CONTRACTOR SHALL KEEP CLEAN AND MAINTAIN EACH AREA FOR USE AFTER WORK IN THAT AREA IS COMPLETE.
2. THE CONTRACTOR SHALL BE RESPONSIBLE FOR THE PROTECTION OF HIS OWN WORK, MATERIALS, AND OTHER BELONGINGS FROM DAMAGE.
3. THE CONTRACTOR SHALL BE RESPONSIBLE FOR PROTECTING ALL OWNER-PROPERTY IN THE WORK AREA. ALL MATERIALS THAT CAN BE DAMAGED BY TEMPERATURE OR HUMIDITY EXCURSIONS SHALL BE REMOVED FROM THE WORK AREA AND STORED IN AN AIR-CONDITIONED ENVIRONMENT.
4. PROTECTION OF ROOF: THE ROOF SURROUNDING THE WORK AREA WHERE NEW EQUIPMENT IS TO BE DEMOLISHED OR INSTALLED SHALL BE PROTECTED WITH 1" INSULATION BOARD COVERED BY ½" PLYWOOD. SEAMS OF THE BOARD AND PLYWOOD SHALL BE STAGGERED SO NO ROOF MEMBRANE IS EXPOSED. FOLLOWING THE COMPLETION OF THE WORK, ALL DEBRIS IS TO BE CAREFULLY REMOVED FROM THE ROOF PRIOR TO REMOVAL OF THE ROOF PROTECTION.
5. PROVIDE TEMPORARY HEATERS TO MAINTAIN WORKING TEMPERATURES. DO NOT USE INSTALLED HVAC SYSTEMS FOR CONDITIONING DURING CONSTRUCTION.
6. WORK AREA SHALL BE COMPLETELY ENCLOSED AND SEALED FROM OCCUPIED AREAS. NEGATIVE PRESSURE SHALL BE MAINTAINED AT ALL TIMES DURING CONSTRUCTION ACTIVITIES SUCH AS DRYWALL SANDING, CUTTING AND GRINDING THAT RELEASE PARTICLES; OR ACTIVITIES SUCH AS GLUING, PAINTING OR WELDING THAT RELEASE GASEOUS CONTAMINANTS. CLOSE SUPPLY AIR OUTLETS AND RETURN AIR INLETS, CONNECT EXHAUST FAN TO EXHAUST SYSTEM OR TO BUILDING EXTERIOR AND OPERATE CONTINUOUSLY UNTIL COMPLETION OF ALL CONSTRUCTION ACTIVITIES.
7. PERFORM ALL ACTIVITIES THAT RELEASE PARTICLES, SUCH AS CUTTING AND SANDING, OR GASEOUS CONTAMINANTS, SUCH AS USE OF ADHESIVES AND PAINT, AT LEAST 72 HOURS PRIOR TO OCCUPANCY. FULLY FLUSH SPACE WITH FRESH AIR AS MUCH AS CONDITIONS PERMIT IN THE 72 HOURS PRIOR TO OCCUPANCY, BY OPENING DOORS, RUNNING HVAC UNITS AND EXHAUST FANS.

SUBMITTALS

1. CONTRACTOR SHALL SUBMIT SHOP DRAWINGS, CATALOG CUTS OR CERTIFIED PRINTS COVERING ITEMS OF MECHANICAL AND ELECTRICAL EQUIPMENT, INCLUDING BUT NOT LIMITED TO, THE FOLLOWING:

LIGHT FIXTURES	ENCLOSED SWITCHES & CBS
FIRE ALARM EQUIPMENT	EXPOSED CONDUIT DETAILS
CALCULATIONS	ELECTRICAL PANELBOARDS
ELECTRICAL ENCLOSURES	EXTERIOR VISIBLE ELEMENTS
TRANSFORMERS	LIGHTING CONTROLS, PHOTOCELL

2. CONTRACTOR SHALL CLEARLY INDICATE CHARACTERISTICS ON EACH REQUIRED SUBMITTAL AND CERTIFY THAT THE EQUIPMENT & MATERIALS REPRESENTED BY THE SUBMITTALS ARE IN COMPLIANCE WITH CONTRACT DOCUMENTS.
3. SUBMITTALS WILL BE REVIEWED FOR GENERAL COMPLIANCE WITH THE CONTRACT DOCUMENTS. SUBMITTAL REVIEW SHALL NOT RELIEVE THE CONTRACTOR OF COMPLIANCE WITH CONTRACT DOCUMENTS.
4. VERIFY ALL ELECTRICAL REQUIREMENTS FOR EQUIPMENT BEFORE ISSUING SUBMITTALS AND EQUIPMENT PURCHASE.
5. EQUIPMENT SHALL BE AS SCHEDULED AND MEET ALL REQUIREMENTS AND PERFORMANCE LISTED IN SCHEDULES. MANUFACTURERS LISTED ARE BASIS OF DESIGN. SUBSTITUTIONS ARE SUBJECT TO OWNER AND ENGINEER'S APPROVAL. IT IS THE CONTRACTOR'S RESPONSIBILITY TO RE-EVALUATE ANY SUBSTITUTED EQUIPMENT, REDESIGN IN ORDER TO COORDINATE THE SUBSTITUTION WITH THE SYSTEM AND CERTIFY THAT THE SUBSTITUTION IS EQUIVALENT TO BASIS OF DESIGN.

RECORD DRAWINGS

1. MAINTAIN RECORD SET OF PLANS AS WORK PROGRESSES, SHOWING ADDITIONS AND SUBSTITUTIONS FROM DESIGN AND CONCEALED WORK. AT COMPLETION, A RECORD SET OF PLANS SHALL BE TURNED OVER TO THE OWNER AND INCORPORATED INTO THE OPERATION AND MAINTENANCE MANUALS. AS BUILT SET SHALL BE COMPETED IN CAD OR CLEAN NEAT PDF FORMAT WITH MARK-UPS IN RED.

CLOSEOUT & WARRANTY

1. UPON COMPLETION OF WORK, THE CONTRACTOR SHALL REMOVE ALL DEBRIS & UNUSED MATERIALS AND THOROUGHLY CLEAN THE CONTRACT AREA.
2. PROVIDE OWNER WITH THREE BOUND COPIES OF ALL EQUIPMENT MANUFACTURER'S INSTALLATION, OPERATION AND MAINTENANCE MANUALS, TEST AND BALANCE REPORTS, RECORD DRAWINGS EQUIPMENT SUBMITTALS, PARTS DIAGRAMS, AND OTHER MATERIALS RECEIVED OR PRODUCED DURING CONSTRUCTION.
3. PROVIDE AT LEAST ONE DAY OF TRAINING TO OWNER'S PERSONNEL IN OPERATION OF EQUIPMENT AND PREVENTATIVE MAINTENANCE REQUIRED FOR EACH SYSTEM.
4. ALL WORK SHALL BE GUARANTEED AGAINST DEFECTS OF MATERIAL AND/OR WORKMANSHIP FOR A PERIOD OF ONE YEAR AFTER ACCEPTANCE OF THE WORK BY THE OWNER FOR THE BENEFICIAL USE THEREOF. THE CONTRACTOR WILL REMEDY ANY DEFECTS AND ANY DAMAGE RESULTING FROM THE WORK THAT OCCURS WITHIN THE PERIOD NAMED ABOVE.
5. REPAIR OR REPLACE WITHOUT MATERIAL AND LABOR CHARGE TO THE OWNER ALL ITEMS FOUND DEFECTIVE DURING THE WARRANTY PERIODS. IN THE CASE OF REPLACEMENT OR REPAIR DUE TO FAILURE WITHIN THE WARRANTY PERIOD, THE WARRANTY ON THAT PORTION OF THE WORK SHALL BE EXTENDED FOR A MINIMUM PERIOD OF ONE (1) YEAR FROM THE DATE OF SUCH REPLACEMENT OR REPAIR.

ELECTRICAL LEGEND

SYMBOL	DESCRIPTION
A	UPPER CASE INDICATES FIXTURE TYPE (TYPICAL FOR ALL LIGHTING FIXTURES). SEE LIGHTING SCHEDULE.
	LIGHTING FIXTURE
a	LOWER CASE INDICATES CONTROLLING DEVICE/SWITCH (TYPICAL FOR ALL LIGHTING FIXTURES) SEE LIGHTING CONTROL SCHEDULE.
	LIGHTING FIXTURE WITH EMERGENCY BACKUP OR NIGHT LIGHT CIRCUIT.
	WALL MOUNTED LIGHT FIXTURE. SEE LIGHTING FIXTURE SCHEDULE.
	RECESSED MOUNTED LIGHT FIXTURE. SEE LIGHTING FIXTURE SCHEDULE.
	EMERGENCY EXIT LIGHT. CEILING OR WALL MOUNTED. SHADED AREA INDICATES ILLUMINATING FACE. PROVIDE BI-DIRECTIONAL ARROW AS INDICATED. WALL MOUNTING HEIGHT AT 7'-6" AFF. SEE LIGHTING FIXTURE SCHEDULE.
	COMBINATION EMERGENCY EXIT/EMERGENCY LIGHT WITH 90 MINUTE BATTERY BACKUP. NUMBER OF HEADS AS INDICATED. SEE LIGHTING FIXTURE SCHEDULE.
	EMERGENCY LIGHT WITH 90 MINUTE BATTERY BACKUP. NUMBER OF HEADS AS INDICATED. SEE LIGHTING FIXTURE SCHEDULE.
	SITE LIGHT ON POLE. SEE LIGHTING FIXTURE SCHEDULE.
S	SINGLE POLE WALL TOGGLE SWITCH. SEE LIGHTING CONTROL SCHEDULE.
S_X	WALL SWITCH. LOWER CASE SUBSCRIPT INDICATES FIXTURES CONTROLLED BY SWITCH AND SWITCH TYPE. SEE LIGHTING CONTROL SCHEDULE.
S_3	THREE-WAY WALL TOGGLE SWITCH. SEE LIGHTING CONTROL SCHEDULE.
S_M	MOTOR SWITCH WITH THERMAL OVERLOAD.
OC	CEILING MOUNTED OCCUPANCY SENSOR. LOWER CASE SUBSCRIPT INDICATES FIXTURES CONTROLLED. SEE LIGHTING CONTROL SCHEDULE.
D	DAYLIGHT HARVESTING SENSOR. LOWER CASE SUBSCRIPT INDICATES FIXTURES CONTROLLED. SEE LIGHTING CONTROL SCHEDULE.
TC	TIME CLOCK.
	DUPLEX RECEPTACLE. 20A, 2P, 3W, 125V.
GFI	DUPLEX GFCI RECEPTACLE. 20A, 2P, 3W, 125V.
	DOUBLE DUPLEX RECEPTACLE. 20A, 2P, 3W, 125V.
	FLUSH FLOOR MOUNTED DUPLEX RECEPTACLE. 20A, 2P, 3W, 125V.
CLG	CEILING MOUNTED DUPLEX RECEPTACLE. 20A, 2P, 3W, 125V.
	FLUSH IN FLOOR MOUNTED DOUBLE DUPLEX RECEPTACLE. 20A, 2P, 3W, 125V.
	SPECIAL RECEPTACLE. TYPE AS INDICATED OR SCHEDULED.
	DUPLEX TELEPHONE/DATA OUTLET. FLUSH IN FLOOR OR WALL MOUNTED.
CLG	CEILING MOUNTED DUPLEX TELEPHONE/DATA OUTLET.
J	JUNCTION BOX. CEILING OR WALL MOUNTED. SIZE PER NEC OR AS INDICATED.
	NON-FUSED DISCONNECT SWITCH. TYPE AND RATING AS INDICATED.
F	FUSED DISCONNECT SWITCH. TYPE AND RATING AS INDICATED.
	PANELBOARD RECESSED OR SURFACE MOUNTED. TYPE AS INDICATED.
M 1/4	ELECTRICAL MOTOR. SIZE AS INDICATED.
	CONDUIT IN CEILING OR WALLS. (2) #12 & (1)#12 GRD IN 3/4"C. UNLESS OTHERWISE NOTED.
	CONDUIT IN OR UNDER FLOOR. (2) #12 & (1)#12 GRD IN 3/4"C. UNLESS OTHERWISE NOTED.
LP-1,3,5	HOMERUN TO PANELBOARD. ARROWS INDICATE NUMBER OF CIRCUITS. CROSSLINES INDICATE NUMBER OF CONDUCTORS.
	CIRCUIT NUMBER.
	PANEL DESIGNATION.
	DRAW-OUT CONNECTION.
	GROUND ROD AND GROUND ROD WITH TEST WELL.
100A	MOLDED CASE CIRCUIT BREAKER. NUMERAL INDICATES BREAKER SIZE.
	TRANSFORMER. SIZE AS INDICATED.
	CURRENT TRANSFORMER.
Y	WYE CONNECTION.
Δ	DELTA CONNECTION.
	GROUND CONNECTION.
M	UTILITY WATTHOUR METER.
S	SMOKE DETECTOR. HARDWIRED,CEILING MOUNTED.
CS	COMBINATION CARBON MONOXIDE/SMOKE DETECTOR. CEILING MOUNTED.
	SPECIAL CABINET - TYPE AS NOTED.
15	VISUAL AND AUDIBLE FIRE ALARM, M.H. 80" A.F.F. SUBSCRIPT INDICATES LIGHT OUTPUT (CANDELAS)
15	VISUAL FIRE ALARM, M.H. 80" A.F.F. SUBSCRIPT INDICATES LIGHT OUTPUT (CANDELAS)
F	FIRE ALARM - PULL STATION

ELECTRICAL ABBREVIATIONS

ABBREVIATION	DESCRIPTION
A	AMPERE
AC	ALTERNATING CURRENT
AFF	ABOVE FINISHED FLOOR
AFI/AFCI	ARC FAULT CIRCUIT INTERRUPTER
AF/AT	AMP FRAME / AMP TRIP
AHU	AIR HANDLING UNIT
AIC	AMPERES INTERRUPTING CAPACITY
AL	ALUMINUM
ATS	AUTOMATIC TRANSFER SWITCH
AUX	AUXILIARY
AWG	AMERICAN WIRE GAUGE
C	CONDUIT
CB	CIRCUIT BREAKER
CT	CURRENT TRANSFORMER
CU	COPPER
CX	CONNECT TO EXISTING
DC	DIRECT CURRENT
DIA	DIAMETER
DISC	DISCONNECT
EF	EXHAUST FAN
EMT	ELECTRICAL METALLIC TUBING
ETR	EXISTING TO REMAIN
EX	EXISTING
FA	FIRE ALARM
FACP	FIRE ALARM CONTROL PANEL
FDR	FEEDER
FLA	FULL LOAD AMPERES
GA	GAUGE
GFI/GFCI	GROUND FAULT CURRENT INTERRUPTER
GRD	GROUND
HP	HORSEPOWER
HZ	HERTZ
JB	JUNCTION BOX
KVA	KILOVOLT AMPERE
KW	KILOWATTS
LTG	LIGHTING
MCB	MAIN CIRCUIT BREAKER
MLO	MAIN LUG ONLY
MTD	MOUNTED
NEC	NATIONAL ELECTRIC CODE
NEMA	NATIONAL ELECTRICAL MANUFACTURERS ASSOCIATION
NF	NON-FUSED
NFPA	NATIONAL FIRE PROTECTION ASSOCIATION
NIC	NOT IN CONTRACT
NTS	NOT TO SCALE
PF	POWER FACTOR
PH	PHASE
PNL	PANEL
R	EXISTING RELOCATED
REX	REMOVE RELOCATE EXISTING
RPM	REVOLUTIONS PER MINUTE
RX	REMOVE EXISTING
SWBD	SWITCHBOARD
TEL	TELEPHONE
TYP	TYPICAL
UG	UNDERGROUND
UH	UNIT HEATER
V	VOLTS
W	WATTS
WP	WEATHERPROOF
XFMR	TRANSFORMER
XR	EXISTING TO REMAIN
XXX-1	EQUIPMENT DESIGNATION

DRAWING INDEX

SHEET NO.	NAME
E001	ELECTRICAL NOTES, ABBREVIATIONS, & LEGEND
E002	ELECTRICAL SPECIFICATIONS
E100	ELECTRICAL POWER FIRST & SECOND FLOOR PLAN
E200	ELECTRICAL LIGHTING FIRST & SECOND FLOOR PLAN
E300	ELECTRICAL RISER DIAGRAMS
E301	ELECTRICAL DETAILS
E400	ELECTRICAL SCHEDULES
E401	ELECTRICAL SCHEDULES
E402	ELECTRICAL SCHEDULES
E403	ELECTRICAL SCHEDULES

APPLICABLE CODES (CHARLES COUNTY, MD)

2021	INTERNATIONAL BUILDING CODE (IBC)
2021	INTERNATIONAL EXISTING BUILDING CODE (IEBC)
2021	INTERNATIONAL RESIDENTIAL CODE (IRC)
2020	NATIONAL ELECTRICAL CODE (NFPA-70)
2021	INTERNATIONAL FUEL GAS CODE (IFGC)
2021	INTERNATIONAL MECHANICAL CODE (IMC)
2021	INTERNATIONAL PLUMBING CODE (IPC)
2021	INTERNATIONAL ENERGY CONSERVATION CODE
2021	INTERNATIONAL FIRE CODE (IFC) CH.12-13, SECTION 312

CODE & PLANS REVIEW

IT IS THE CONTRACTOR'S RESPONSIBILITY TO REVIEW THESE CONSTRUCTION DOCUMENTS WITH THE LOCAL INSPECTORS FOR THEIR COMMENT AND APPROVAL BEFORE STARTING WORK. CONTACT ENGINEER WITH ANY ISSUES RAISED BY THE INSPECTOR.

"I certify that these documents were prepared or approved by me, and that I am a duly licensed Engineer in the State of Maryland, License Number 39052, Expiration Date 12/23/2026."

MEP Engineer
Abramson Engineering
3655-B Old Court Rd, Suite 24
Baltimore, MD 21208
(410) 259-9461

REVISIONS
- 3/30/2026 PERMIT SET

RENOVATION OF UNIVERSITY OF MARYLAND
MEDICAL CENTER OFFICE BUILDING
616 CHARLES STREET
LA PLATA, MARYLAND 20646

R.L. LITTEN & ASSOCIATES, ARCHITECTS, LLC
300 CHARLES STREET, SUITE 4
P.O. BOX 1920, LAPLATA, MD 20646 (301) 934-1471

DRAWN BY: AT
CHK'D BY: SA
PROJECT NO: 25-420

E001

ELECTRICAL SPECIFICATIONS

DIVISION 26 ELECTRICAL

SECTION 26-0503 - ACCESS FOR ELECTRICAL EQUIPMENT

1. ALL EQUIPMENT SHALL BE INSTALLED IN SUCH A WAY THAT ALL COMPONENTS REQUIRING ACCESS ARE SO LOCATED AND INSTALLED THAT THEY MAY BE SERVICED, RESET, REPLACED, RE-CALIBRATED, ETC., BY SERVICE TECHNICIANS IN ACCORDANCE WITH THE MANUFACTURER'S RECOMMENDATIONS AND CODES. IF ANY EQUIPMENT OR COMPONENTS ARE LOCATED IN SUCH A POSITION THAT THIS CONTRACTOR CANNOT COMPLY WITH THE ABOVE, THE CONTRACTOR SHALL NOTIFY THE ENGINEER IN WRITING BEFORE EQUIPMENT IS INSTALLED.
2. INSTALL ACCESS DOORS, PANELS, ETC. ON ALL EQUIPMENT AND DEVICES REQUIRING ACCESS FOR ADJUSTMENT AND SERVICE WHICH WILL BE CONCEALED BEHIND WALLS OR ABOVE HARD CEILINGS AND PLACE HIGHLY VISIBLE TAGS STATING "ACCESS REQUIRED". ACCESS PANELS ARE NOT REQUIRED WHEN EQUIPMENT IS LOCATED ABOVE A FULLY REMOVABLE LIFT OUT CEILING TILE TYPE GRID. CONSULT ARCHITECT FOR PANEL FINISH.
3. ACCESS DOOR/PANELS SHALL BE MINIMUM OF 16"X16" OR LARGER TO ALLOW FOR REQUIRED ADJUSTMENTS TO THE EQUIPMENT. DOORS SHALL BE FLUSH WITH ADJACENT SURFACE. CONSULT ARCHITECT FOR MATERIAL AND FINISH FOR EACH DOOR LOCATION. LOCKS SHALL BE FLUSH SCREWDRIVER TYPE WITH STEEL CAMS.
4. ACCESS PANELS ARE NOT REQUIRED IN LIFT OUT TILE CEILINGS.

SECTION 26-0504 - ELECTRICAL DEMOLITION

1. REFER TO ARCHITECTURAL DEMOLITION PLANS FOR COMPLETE EXTENT OF DEMOLITION WORK.
2. ELECTRICAL, FIRE ALARM, AND TELEPHONE SERVICES: AREAS OUTSIDE SCOPE OF WORK SHALL ALWAYS REMAIN IN OPERATION DURING CONSTRUCTION.
3. WHEN PORTIONS OF AN ELECTRICAL SYSTEM ARE TO BE REMOVED, PRESERVE POWER AND SIGNAL CONNECTIONS TO ITEMS WHICH ARE TO REMAIN, INCLUDING INSTALLATION OF THE NECESSARY WIRE AND CONDUIT.
4. REMOVE ALL LIGHTING FIXTURES, RECESSED AND SURFACE MOUNTED, THROUGHOUT DEMOLITION SCOPE OF WORK AREA, UNLESS OTHERWISE NOTED.
5. REMOVE ALL CONDUIT, WIRE, AND AC CABLE ASSOCIATED WITH EQUIPMENT REMOVED UNDER MECHANICAL AND PLUMBING DEMOLITION. REFER TO MECHANICAL AND PLUMBING DEMOLITION PLANS AND NOTES, AND COORDINATE AS REQUIRED.
6. IN AREA OF WORK, REMOVE ALL UNUSED AND ABANDONED ELECTRICAL EQUIPMENT, CONDUIT, WIRE, AND AC/MC CABLE IN DEMOLISHED WALLS AND ABOVE CEILING SPACES BACK TO PANELBOARDS. DO NOT LEAVE ABANDONED IN PLACE UNLESS OTHERWISE NOTED.
7. WITHIN REMAINING WALLS: REMOVE ALL UNUSED AND ABANDONED AC/MC CABLE. UNUSED AND ABANDONED CONDUIT MAY BE LEFT IN PLACE IF NOT INTERFERING WITH NEW CONSTRUCTION. REMOVE ALL WIRE AND CABLE FROM WITHIN CONDUIT.
8. DENOTE ALL REMOVED CIRCUITS AS "SPARE" ON THE PANEL SCHEDULE KEPT WITH EACH PANELBOARD. TURN ALL CIRCUIT BREAKERS AND SWITCHES PROTECTING CIRCUITS REMOVED DURING DEMOLITION TO THE "OFF" POSITION. INSTALL FILLER PLATES TO COVER ANY BLANK OPENINGS IN PANELBOARD FACE.
9. THE BUILDING OWNER RESERVES THE RIGHT TO HAVE SOME OF THE REMOVED MATERIALS STORED ON SITE. THE CONTRACTOR IS RESPONSIBLE FOR COORDINATING, IN CONJUNCTION WITH THE BUILDING OWNER, THE LIST OF WHAT IS TO BE SALVAGED.

SECTION 26-0507 - FIRESTOPPING

1. ALL PENETRATIONS THROUGH FIRE RATED WALLS ASSOCIATED WITH THE INSTALLATION SHALL BE SLEEVED AND FIRE-STOPPED USING A UL APPROVED METHOD. UL APPROVED METHOD SHALL MEET OR EXCEED FIRE RATING OF STRUCTURE BEING PENETRATED. REFERENCE ARCHITECTURAL PLANS FOR FIRE RATED STRUCTURES. IF SHOWN, REFERENCE ARCHITECTURAL, MECHANICAL AND ELECTRICAL DRAWINGS FOR PENETRATION DETAILS.
2. ALL OPENINGS THROUGH FIRE RATED WALLS, FLOORS, AND/OR ROOFS FOR, PIPING, CONDUIT, ETC., SHALL BE FIRE SEALED WITH A CALCIUM SALICATE, SILICONE "RTV" FOAM, "3M" FIRE RATED SEALANTS, HILTI FIRESTOP SYSTEMS, OR APPROVED EQUAL TO MAINTAIN THE INTENDED FIRE RATING AND ASSOCIATED UL RATINGS AS RECOMMENDED BY THE ARCHITECT AND/OR SEALANT MANUFACTURER.
3. ALL FIRE STOPPING SEALANTS SHALL BE THIXOTROPIC SO AS NOT SO SLUMP OR SAG AND SHALL BE TROWELABLE. FIRE STOPPING SEALANTS SHALL BE INTUMESCENT AND SHALL BE FREE OF ASBESTOS, HALOGENS, AND VOLATILE SOLVENTS.
4. FIRE STOPPING MATERIALS SHALL BE CLASSIFIED IN THE UNDERWRITERS LABORATORIES (UL) FIRE RESISTANCE DIRECTORY OR LISTED IN THE WARNOCK HERSEY INTERNATIONAL DIRECTORY.
5. INSTALLATION OF LIGHT FIXTURES AND OUTLETS IN RATED CEILING OR WALLS SHALL HAVE RATED BOXES OR BE PROVIDED WITH PRE-MANUFACTURED ENCLOSURES MATCHING THE RATING OF THE CEILING OR WALL. INSTALL ENCLOSURES IN ACCORDANCE WITH MANUFACTURE INSTRUCTIONS.

SECTION 26-0519 - WIRING AND CABLES

1. PROVIDE LISTED WIRE AND CABLE COMPLIANT WITH THE NATIONAL ELECTRIC CODE FOR THE TEMPERATURE, CONDITIONS AND LOCATION WHERE INSTALLED. CONDUCTORS SHALL BE SOFT-DRAWN ANNEALED COPPER WITH 600-VOLT INSULATION AND NOT LESS THAN 98% CONDUCTIVITY. AMPACITY FOR ALL CONDUCTORS SHALL BE BASED ON THE 75 °C TEMPERATURE RATING.
2. COLOR CODE ALL CONDUCTORS FOR PHASE IDENTIFICATION AS FOLLOWS:

208Y/120V480Y/277V

PHASE A	BLACK	BROWN
PHASE B	RED	ORANGE
PHASE C	BLUE	YELLOW
NEUTRAL	WHITE	GRAY
GROUND	GREEN	GREEN

3. ALL BRANCH POWER CIRCUITS, UNLESS OTHERWISE INDICATED, SHALL BE AS FOLLOWS: HOME RUN FROM FIRST OUTLET TO PANEL SHALL BE #12 WHEN RUN IS 50 FEET OR LESS IN LENGTH; #10 WHEN OVER 60 FEET IN LENGTH, AND THE WIRING FROM THE FIRST OUTLET TO THE REMAINDER OF OUTLETS ON A CIRCUIT SHALL BE #12. MINIMUM SIZE WIRE FOR ANY SYSTEM SHALL BE #12, UNLESS SPECIFIED OTHERWISE OR INDICATED OTHERWISE ON THE DRAWINGS. MINIMUM CONTROL, FIRE ALARM AND SIGNAL WIRING #14. PROVIDE STRANDED CONDUCTORS FOR ALL SIZES #8 AND LARGER. CONDUCTORS #10 AND SMALLER SHALL BE SOLID.
4. THE TOTAL VOLTAGE DROP ACROSS THE COMBINATION OF FEEDERS AND BRANCH CIRCUITS SHALL NOT EXCEED 3 PERCENT.
5. LOW VOLTAGE WIRING INSTALLED ABOVE CEILINGS SHALL BE BUNDLED AND SUPPORTED FROM BUILDING STRUCTURE. DO NOT LAY CABLE ON CEILING. WIRE AND CABLE IN AIR PLENUMS SHALL BE PLENUM RATED.

SECTION 26-0521 - WIRING CONNECTIONS

1. ALL SPLICES SHALL BE MADE IN BOXES APPROVED FOR THE PURPOSE. ALL SPLICES AND CONNECTIONS SHALL BE ACCESSIBLE.
2. PROVIDE UL-LISTED FACTORY-FABRICATED, SOLDER-LESS METAL CONNECTORS OF SIZES, AMPACITY RATINGS, MATERIALS, TYPES AND CLASSES FOR APPLICATIONS AND FOR SERVICES INDICATED. USE CONNECTORS WITH TEMPERATURE RATINGS EQUAL TO OR GREATER THAN THOSE OF THE WIRES UPON WHICH USED.
3. SPLICES IN COPPER FEEDERS AND BRANCH CIRCUIT WIRING SHALL BE AS FOLLOWS:
   3.1. WIRE SIZE #12-#10 SHALL BE MAKE WITH NON-TOOL, SELF-INSULATED, APPLIED WIRE CONNECTIONS WITH INTEGRAL SELF-LOCKING SPRING GRIP, IDEAL "WINGNUTS" OR APPROVED EQUAL.
   3.2. WIRE SIZE #8 AND LARGER SHALL BE MADE WITH MECHANICAL COMPRESSION TYPE CONNECTORS BY BURNDY O-Z T&B OR EQUAL.
4. KEEP CONDUCTOR SPLICES TO MINIMUM. INSTALL SPLICE AND TAP CONNECTORS THAT POSSESS EQUIVALENT OR BETTER MECHANICAL STRENGTH AND INSULATION RATING THAN CONDUCTORS BEING SPLICED. USE SPLICE AND TAP CONNECTORS THAT ARE COMPATIBLE WITH CONDUCTOR MATERIAL.
5. LEAVE AT LEAST 6" OF WIRE AT ALL BOXES FOR CONNECTIONS.
6. FORM AND TIE ALL WIRING IN PANELBOARDS. THERE SHALL BE NO WIRENUT JOINTS OR SPLICES MAKE INSIDE SWITCHBOARDS/PANELBOARDS.

SECTION 26-0526 - GROUNDING AND BONDING

1. GROUNDING SHALL CONSIST OF COPPER CONDUCTORS IN CONDUIT WITH BOLTED CONNECTIONS. GROUNDING AND BONDING SHALL COMPLY WITH ALL LOCAL CODES, THE NEC, AND THE IEEE GREEN BOOK. ALL METALLIC RACEWAYS SHALL BE GROUNDED.
2. ALL EXPOSED NON-CURRENT CARRYING METALLIC PARTS OF THE ELECTRICAL EQUIPMENT, INCLUDING THE METALLIC RACEWAY SYSTEM AND NEUTRAL CONDUCTOR SHALL BE GROUNDED IN ACCORDANCE WITH NEC PROVIDE A DRIVEN GROUND ROD OR SYSTEM OF GROUND RODS WHICH WILL PROVIDE AN OVERALL GROUNDING RESISTANCE LESS THAN 25 OHMS. CONNECTION BETWEEN GROUND ROD AND GROUNDING ELECTRODE CONDUCTOR SHALL BE MADE USING EXOTHERMIC WELDS. PROVIDE CONNECTION TO METALLIC WATER SERVICE WITHIN THE BUILDING AND ADDITIONALLY TO REINFORCING STEEL IN THE BUILDING FOUNDATION. ALL POINTS OF GRADING CONNECTIONS SHALL BE MADE ACCESSIBLE.

SECTION 26-0533 - RACEWAYS AND CONDUITS

1. ALL WIRE SHALL BE RUN IN GALVANIZED RIGID CONDUIT (GRC) OR ELECTRICAL METALLIC TUBING (EMT) OR METAL CLAD (MC) IN ACCORDANCE WITH CODE. MC CABLE IS PERMITTED FOR LIGHTING AND CONVENIENCE RECEPTACLES WHEN LOCATED IN CONCEALED CEILINGS OR WALLS. FLEXIBLE CONDUIT IS PERMITTED FOR FINAL CONNECTION TO MOTORS AND OTHER EQUIPMENT SUBJECT TO VIBRATION.
2. CONDUIT UNDERGROUND SHALL BE SCHEDULE 40 PVC WITH GROUND WIRE. PVC CONDUIT SHALL NOT BE USED IN OR ABOVE FLOOR SLAB. PVC CONDUIT SHALL TERMINATE BELOW FLOOR SLAB WITH RIGID THREADED METAL CONDUIT ADAPTER.
3. CONCEAL CABLES, CONDUIT AND EMT IN FINISHED AREAS, UNLESS INDICATED OTHERWISE, WITHIN FINISHED WALLS, CEILINGS, AND FLOORS. KEEP RACEWAYS AT LEAST 6-INCHES AWAY FROM PARALLEL RUNS OF FLUES AND HOT WATER PIPES. INSTALL RACEWAYS LEVEL AND SQUARE AND AT PROPER ELEVATIONS AS HIGH AS POSSIBLE.
4. EXPOSED RACEWAY IS PERMITTED ONLY WHERE SHOWN ON ARCHITECTURAL PLANS, INSTALLED AS HIGH AND INCONSPICUOUSLY AS POSSIBLE, STRAIGHT, PLUMB, AND PARALLEL TO BUILDING LINES. CUT RACEWAY SQUARE, REAM AND SMOOTH.
5. EXPOSED HANGERS SHALL BE UNIFORMLY SPACED AND NEATLY INSTALLED WITH NO EXCESS MATERIAL BEYOND THAT REQUIRED FOR FUNCTION. PAINT EXPOSED HANGERS AND CONDUIT AS DIRECTED BY ARCHITECT.
6. SUPPORT CONDUIT AND RACEWAYS AS PER NEC ON RIGID HANGERS, SUPPORTS AND STRAPS FROM STRUCTURAL SLAB OR STEEL. CEILING SUPPORT WIRE OR SIMILAR MATERIAL IS PROHIBITED.
7. PREVENT FOREIGN MATTER FROM ENTERING RACEWAYS BY USING TEMPORARY CLOSURE PROTECTION. PLUG ENDS OF RACEWAYS DURING CONSTRUCTION AND SWAB-CLEAN BEFORE PULLING WIRE OR CABLE.
8. MAKE BENDS AND OFFSETS SO THE INSIDE DIAMETER IS NOT EFFECTIVELY REDUCED. UNLESS OTHERWISE INDICATED, KEEP THE LEGS OF A BEND IN THE SAME PLANE AND THE STRAIGHT LEGS OF OFFSETS PARALLEL.
9. RUN RACEWAYS WITH A MINIMUM OF BENDS IN THE SHORTEST PRACTICAL DISTANCE CONSIDERING THE TYPE OF BUILDING CONSTRUCTION AND OBSTRUCTIONS EXCEPT AS OTHERWISE INDICATED. COORDINATE CONDUIT RUNS WITH OTHER TRADES AND ADJUST TO AVOID INTERFERENCE.
10. JOIN RACEWAYS WITH FITTINGS DESIGNED AND APPROVED FOR THE ASSOCIATED RACEWAY AND SUITABLE FOR THE USE AND LOCATION AND MAKE JOINTS TIGHT. WHERE JOINTS CANNOT BE MADE TIGHT, USE BONDING JUMPERS TO PROVIDE ELECTRICAL CONTINUITY OF THE RACEWAY SYSTEM. MAKE RACEWAY TERMINATIONS TIGHT. WHERE TERMINATIONS ARE SUBJECT TO VIBRATION, USE BONDING BUSHINGS OR WEDGES TO ASSURE ELECTRICAL CONTINUITY. WHERE SUBJECT TO VIBRATION OR DAMPNESS, USE INSULATING BUSHINGS TO PROTECT CONDUCTORS.
11. ALL CONDUITS PASSING THROUGH FIRE-RATED, FIRE-RESISTANT OR FIRE-STOPPED WALLS, CEILINGS, PARTITIONS AND FLOORS SHALL BE SEALED WITH FOAM TYPE FIRE-RESISTANT SEALANT. FOAM SEALANT SHALL BE CHASE TECHNOLOGY CORPORATION TYPE CTC PR-855, OR EQUAL, AND SHALL BE INSTALLED PER MANUFACTURER'S RECOMMENDATIONS.
12. ADJUSTING AND CLEANING: UPON COMPLETION OF INSTALLATION OF RACEWAY, INSPECT INTERIORS OF RACEWAYS; CLEAR ALL BLOCKAGES AND REMOVE BURRS, DIRT, AND CONSTRUCTION DEBRIS.

SECTION 26-0534 - BOXES

1. INSTALL JUNCTION, PULL BOXES, OR PULLING ELBOWS, WHEREVER REQUIRED BY NEC TO FACILITATE WIRE PULLING OR CONNECTIONS AND AS SHOWN ON DRAWINGS.
2. ALL ELECTRICAL BOXES SHALL BE SUPPORTED FROM BUILDING STRUCTURAL MEMBERS INDEPENDENTLY OF THE CONDUIT RACEWAYS, MECHANICAL SYSTEMS, OR SUSPENDED CEILING SUPPORTS. RECESSED BOXES SHALL BE PROTECTED DURING CONSTRUCTION AND SHALL BE CLEANED BEFORE PULLING WIRE AND INSTALLING DEVICES.
3. BOXES SHALL BE AS FOLLOWS:
   3.1. INTERIOR CONCEALED BOXES SHALL BE 4 INCHES SQUARE STEEL ZINC COATED OR CADMIUM PLATED AND DEPTH OF NOT LESS THAN 2 1/2 INCHES.
   3.2. FLOOR LOCATIONS - AS RATED FOR FLOOR APPLICATION, WITH ADJUSTABLE COVERS AND LEVEL WITH FINISHED FLOOR. PROVIDE FLUSH CAPS FOR CLOSING WHEN NOT IN USE. ARCHITECT OR OWNER TO SELECT BOX CAP COLOR & FINISH.
   3.3. EXTERIOR - RATED WEATHERPROOF.
   3.4. ALL OTHER - STEEL WITH ZINC CADMIUM FINISH.
4. BOXES SHALL BE FLUSH MOUNTED IN ALL FINISHED WALLS. INSTALL RINGS AND RAISED COVERS AS REQUIRED SO THAT COVER PLATES FIR TIGHTLY AGAINST THE BOX.

26-0544 - SLEEVES FOR ELECTRICAL RACEWAYS AND CABLING

1. PROVIDE STANDARD IRON PIPE SIZE STEEL SLEEVES FOR ALL LINES PASSING THROUGH CONCRETE SLABS AND MASONRY WALLS. ALL SLEEVES SHALL BE SET BEFORE CONCRETE IS POURED. HOLES REQUIRED IN MASONRY SHALL BE MADE WITH CORE DRILLS IN A MANNER APPROVED BY THE ENGINEER.
2. SLEEVES FOR PIPES THROUGH WALLS AND FLOORS SHALL BE OF SUFFICIENT SIZE TO PERMIT THE INSULATION, WHERE SPECIFIED, TO CONTINUE THROUGH THE SLEEVES. SLEEVES THROUGH FLOORS SHALL BE FLUSH WITH THE UNDERSIDE OF THE SLAB AND EXTEND 3/4" ABOVE FINISH FLOOR IN WET AREAS ONLY. PROJECTING SLEEVES SHALL BE PROVIDED WITH ANCHORS TO PREVENT THEM FROM BEING LOOSENED AND KNOCKED DOWN IN THE FLOOR CONSTRUCTION. THE ANNULAR SPACE BETWEEN PIPE AND ALL SLEEVES SHALL BE CAULKED WITH POLYSULFIDE CAULKING COMPOUND. THE ANNULAR SPACE SHALL NOT BE LARGER THAN 1/2"FOR ALL PIPES.

SECTION 26-0553 - IDENTIFICATION FOR ELECTRICAL SYSTEMS

1. PROVIDE NAMEPLATE IDENTIFICATION FOR ALL EQUIPMENT SUCH AS: PANELBOARDS, SWITCHBOARDS, JUNCTION BOXES, SAFETY SWITCHES, DISCONNECTS, STARTERS, REMOTE CONTROL, PUSH BUTTONS, ETC.
2. IDENTIFICATION SHALL BE IN THE FORM OF LAMACOID PLASTIC LABEL PERMANENTLY AFFIXED IN A READILY VISIBLE LOCATION. LETTERS SHALL BE WHITE ON BLACK BACKGROUND AND 3/8" HIGH.

SECTION 26-2416 - PANELBOARDS

1. PANELBOARDS SHALL BE ENCLOSED DEAD FRONT SAFETY TYPE WITH FEATURES AS PER DRAWINGS. MAINS AND BUSSES SHALL BE COPPER.
2. CIRCUIT BREAKERS SHALL BE BOLT ON, WITH QUICK MAKE, QUICK BREAK, TRIP INDICATING THERMAL MAGNETIC MOLDED CASE TYPE. TORQUE ALL BOLT ON CONNECTIONS IN ACCORDANCE WITH MANUFACTURER'S INSTRUCTIONS. RETORQUE ALL CONNECTIONS AFTER SUBSTANTIAL COMPLETION BUT NOT MORE THAN TWO MONTHS AFTER FINAL ACCEPTANCE.
3. ARRANGE CIRCUITS BEST AS POSSIBLE TO CIRCUIT NUMBERING ON DRAWING PANEL SCHEDULES. BALANCE PANELBOARD LOADS TO A DIFFERENCE NOT EXCEEDING 20 PERCENT BETWEEN PHASE LOADS. PERFORM MEASUREMENTS DURING PERIOD OF NORMAL WORKING LOAD AS ADVISED BY OWNER. PERFORM CIRCUIT CHANGES OUTSIDE NORMAL OCCUPANCY/WORKING SCHEDULE TO AVOID DISRUPTION. RECHECK LOADS AFTER CIRCUIT CHANGES DURING NORMAL LOAD PERIOD. RECORD ALL LOAD READINGS BEFORE AND AFTER CHANGES AND SUBMIT TEST RECORDS.
4. TYPE CIRCUIT DIRECTORY TO INDICATE INSTALLED CIRCUIT LOADS AFTER BALANCING PANELBOARD LOADS.
5. SWITCHBOARDS, SWITCHGEAR, PANELBOARDS, METER SOCKET ENCLOSURES, AND MOTOR CONTROL CENTERS SHALL BE MARKED TO WARN OF POTENTIAL ELECTRIC ARC FLASH HAZARDS MEETING THE REQUIREMENTS OF NEC 110.16.
6. PANELBOARD MOUNTING HEIGHT SHALL NOT EXCEED 6'-6" FROM FINISHED FLOOR TO CENTER OF TOP BREAKER.

SECTION 26-2713 - ELECTRICITY METERING

1. PROVIDE NECESSARY METERING FACILITIES INCLUDING METER SOCKET, CURRENT-TRANSFORMER (CT) CABINET. COORDINATE WITH LOCAL UTILITY: CONDUIT, AND OTHER WORK FOR METERING REQUIRED BY THE LOCAL UTILITY COMPANY.

SECTION 26-2726 - WIRING DEVICES

1. RECEPTACLES SHALL BE RATED FOR 20A, 125V, NEMA 5-20R DUPLEX GROUNDING TYPE, UNLESS OTHERWISE SPECIFIED. RECEPTACLES LOCATED IN KITCHEN, BATHROOM, OR WITHIN 6' OF A SINK AREAS SHALL BE GFCI RATED. EXTERIOR RECEPTACLES SHALL BE WEATHERPROOF AND GFCI PROTECTED. WEATHERPROOF RECEPTACLES SHALL BE INSTALLED SO THAT THE COVER PROTECTS THE DEVICE IN THE OPEN POSITION.
2. TOGGLE SWITCHES SHALL BE THE SILENT MECHANICAL TYPE RATED 20 AMPERE, 120/277 VOLTS AND SPECIFICATION GRADE. IN MULTIPLE SWITCHING APPLICATIONS, ALL THE SWITCHES SHALL BE GANGED IN A SINGLE BOX. PROVIDE SWITCHES PER DRAWING SCHEDULE.
3. ALL DEVICES SHALL BE WHITE IN COLOR UNLESS OTHERWISE SPECIFIED.
4. ALL COVER PLATES SHALL BE SATIN FINISH WHITE STEEL, 0.04 INCHES THICK UNLESS OTHERWISE SPECIFIED BY ARCHITECT.
5. WIRING DEVICES: UNLESS NOTED OTHERWISE, RECEPTACLES SHALL BE INSTALLED 22 INCHES ABOVE THE FINISHED FLOOR TO THE TOP OF THE BOX, SWITCHES SHALL BE 48 INCHES ABOVE FINISHED FLOOR TO THE TOP OF THE BOX. RECEPTACLES NOTED ABOVE WORK COUNTERS AND CABINETS SHALL BE MOUNTED ABOVE THE BACKSPLASH. RECEPTACLES SHALL BE BONDED TO METALLIC BOXES OR TO SEPARATE GROUND CONDUCTOR PER NEC.

SECTION 26-2816 - ENCLOSED SWITCHES AND CIRCUIT BREAKERS

1. PROVIDE ALL EQUIPMENT WITH DISCONNECT SWITCHES.
2. HVAC DISCONNECT SWITCHES SHALL BE FURNISHED AS INDICATED IN THE DRAWINGS. THE ELECTRICAL CONTRACTOR SHALL COORDINATE WITH THE MECHANICAL CONTRACTOR AND SUPPLY ANY HVAC DISCONNECT SWITCHES NOT PROVIDED WITH THE EQUIPMENT. ALL NON-HVAC DISCONNECT SWITCHES SHALL BE PROVIDED BY THE ELECTRICAL CONTRACTOR.
3. ALL DISCONNECT SWITCHES SHALL BE NORMAL DUTY TYPE NEMA HD, QUICK BREAK MECHANISM AND EXTERNAL PAD LOCKABLE HANDLE, UNLESS NOTED OTHERWISE. SWITCHES SHALL BE NEMA 1 FOR INDOOR USE AND NEMA 3R FOR EXTERIOR USE, UNLESS NOTED OTHERWISE. SWITCHES SHALL BE FUSED, UN-FUSED, AND RATED FOR 240V OR 600V AS APPLICABLE.
4. PROVIDE ONE FULL SET OF FUSES AS NOTED FOR EACH FUSED FEEDER AND 3 SPARES OF EACH UNIQUE SIZE AND TYPE. FUSE CLIPS SHALL BE REJECTION TYPE. FUSES SHALL BE FROM ONE MANUFACTURER TO PROVIDE SELECTIVE COORDINATION AND OF THE FOLLOWING TYPE:

FEEDERS 1-600A	UL CLASS RK1. PLUG IN 200 KAIC CURRENT LIMITING
FEEDERS OVER 600A OR SE	UL CLASS L BOLT ON 200 KAIC CURRENT LIMITING.

5. HVAC SWITCHES SHALL BE OPERATOR INTERLOCKED WITH THE DOOR SO DOOR CAN BE OPENED ONLY IN THE "OFF" POSITION WITHOUT A SPECIAL TOOL.
6. CIRCUIT BREAKERS SHALL BE QUICK MAKE, QUICK BREAK, THERMAL MAGNETIC MOLDED CASE BREAKERS, WITH TRIP RATINGS AND NUMBER OF POLES AS INDICATED.
7. ALL CIRCUIT BREAKERS SHALL HAVE AMPERAGE INTERRUPTING CAPACITY (AIC) AT LEAST 10% GREATER THAN THE AVAILABLE FAULT CURRENT AT THE BREAKER LOCATION, AS CALCULATED BY THE CONTRACTOR. THE AVAILABLE FAULT CURRENT AT THE METER SHALL BE OBTAINED FROM THE UTILITY COMPANY. AIC SHALL BE STATED ON THE PANEL BOARD SCHEDULE.

SECTION 26-5100 - INTERIOR LIGHTING

1. LIGHT FIXTURES SHALL BE AS INDICATED ON LIGHTING FIXTURE SCHEDULE.
2. CONTRACTOR SHALL INSTALL ALL LIGHTING FIXTURES AND PROVIDE NECESSARY MOUNTING HARDWARE. ALL RECESSED LIGHTING FIXTURES SHALL BE THERMALLY-PROTECTED AS REQUIRED BY CODE.
3. LIGHTING FIXTURES: FIXTURES SUPPORTED IN EXPOSED GRID CEILINGS SHALL BE PROVIDED WITH CLIPS. FIXTURES MOUNTED IN OR ON TILE CEILINGS SHALL BE ALIGNED WITH TILES. LIGHTING FIXTURES SHALL BE SUPPORTED FROM THE BUILDING STRUCTURAL MEMBERS EXCEPT FOR EXPOSED GRID CEILINGS WHERE A CEILING SUPPORTING WIRE SHALL BE PROVIDED AT EACH FIXTURE CORNER.
4. CONTRACTOR SHALL PROVIDE ONE COMPLETE SET OF LAMPS FOR ALL LIGHTING FIXTURES (UNLESS SHIPPED WITH FIXTURE). PROVIDE LABEL IN EACH FIXTURE INDICATING SIZE AND TYPE OF LAMP CORRESPONDING WITH SCHEDULE ON DRAWINGS.
5. LIGHTING CONTROLS SHALL MEET THE LOCAL ADOPTED IECC REQUIREMENTS.

DIVISION 28 - ELECTRONIC SAFETY AND SECURITY

SECTION 28 4621 - FIRE ALARM SYSTEM

1. FIRE ALARM DEVICE LOCATIONS AND QUANTITIES SHOWN ON PLANS SHALL BE UPDATED BY APPROVED FIRE ALARM DESIGN-BUILD VENDOR.
2. SUBMIT FIRE ALARM PLANS REQUIRED BY JURISDICTION, INCLUDING DEVICE DATA, WIRING DIAGRAMS, NOTIFICATION APPLIANCE CIRCUIT (NAC) AND, IF APPLICABLE, SPEAKER CURRENT CALCULATIONS,.
3. IN EXISTING BUILDINGS, PROVIDE DEVICES COMPATIBLE WITH EXISTING FIRE ALARM SYSTEM, INSTALLED IN ACCORDANCE WITH BUILDING OWNER REQUIREMENTS BY APPROVED CONTRACTOR.

REVISIONS

- 3/30/2026 PERMIT SET

RENOVATION OF UNIVERSITY OF MARYLAND
MEDICAL CENTER OFFICE BUILDING

616 CHARLES STREET
LA PLATA, MARYLAND 20646

R.L. LITTEN & ASSOCIATES, ARCHITECTS, LLC
300 CHARLES STREET, SUITE 4
P.O. BOX 1920, LAPLATA, MD 20646 (301) 934-1471

STATE OF MARYLAND
SAYAN ABRAMSON
No. 39052
PROFESSIONAL ENGINEER

"I certify that these documents were prepared or approved by me, and that I am a duly licensed Engineer in the State of Maryland, License Number 39052, Expiration Date 12/23/2026."

MEP Engineer
Abramson Engineering
3655-B Old Court Rd, Suite 24
Baltimore, MD 21208
(410) 259-9461

DRAWN BY: AT
CH'D BY: SA

PROJECT NO: 25-420

E002

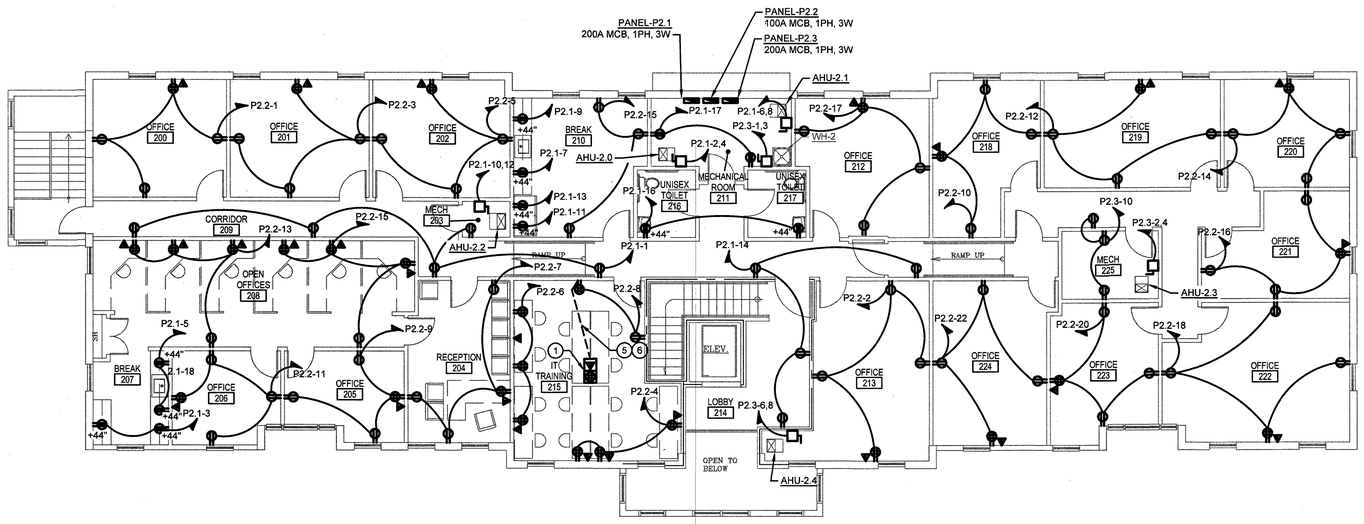

2 ELECTRICAL POWER PLAN - SECOND FLOOR
SCALE: 1/8" = 1'-0"

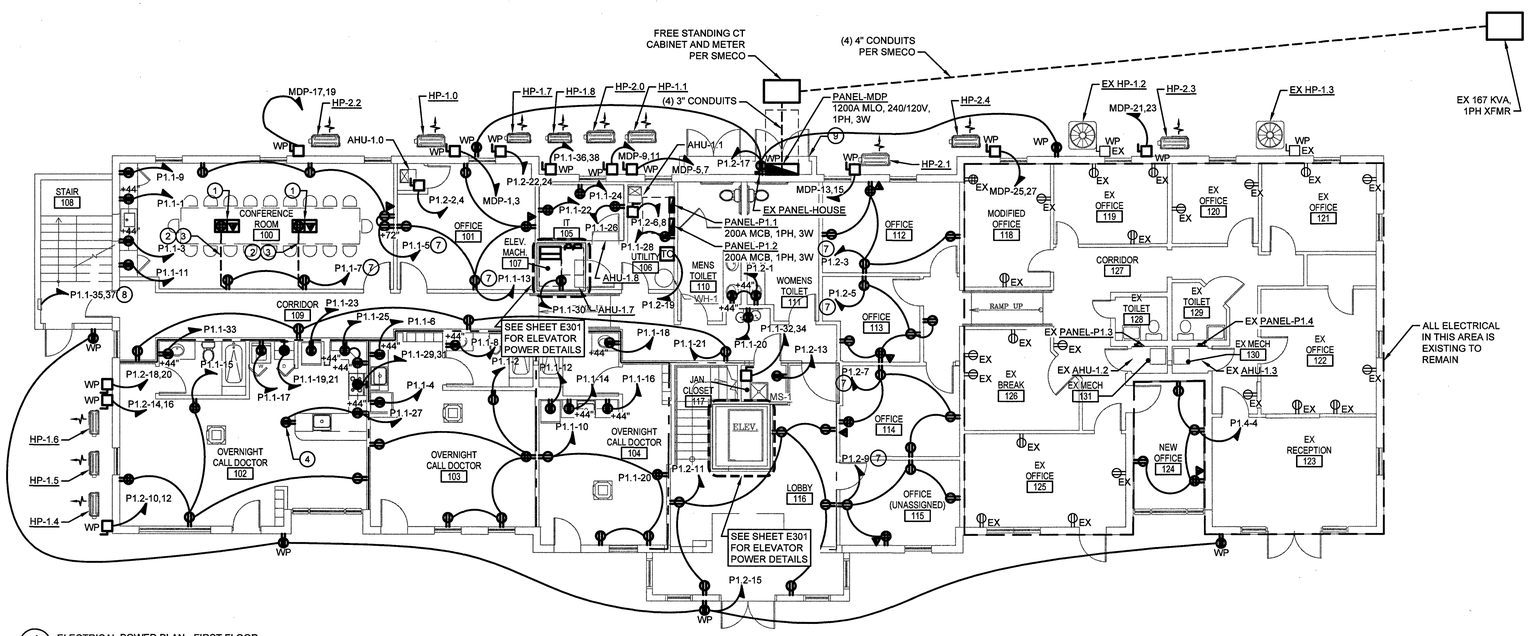

1 ELECTRICAL POWER PLAN - FIRST FLOOR
SCALE: 1/8" = 1'-0"

GENERAL NOTES

1. CONTRACTOR SHALL FIELD VERIFY EXISTING CONDITIONS PRIOR TO START OF ANY WORK AND ADVISE ENGINEER OF ANY DISCREPANCIES.
2. CONTRACTOR SHALL MEET WITH UTILITY METER INSPECTOR ON SITE TO REVIEW DRAWINGS AND COORDINATE SERVICE POINT BEFORE COMMENCING ANY WORK. SERVICE POINT SHOWN ON THESE DRAWINGS IS SUBJECT TO CHANGE.
3. ALL RECEPTACLES MOUNTED AT 18" AFF UNLESS NOTED OTHERWISE.
4. INSTALL 3/4" CONDUIT FROM ALL DATA AND AV OUTLETS UP TO ABOVE FINISHED CEILING. INSTALL WITH PULL STRING AND PROVIDE BUSHING AT END OF CONDUIT TO PROTECT CABLES.
5. COORDINATE FINAL LOW VOLTAGE OUTLET LOCATIONS WITH TENANT.
6. EXTERIOR RECEPTACLES SHALL BE GFCI PROTECTED AND INSTALLED IN WEATHERPROOF LOCK IN-USE ENCLOSURES.
7. CONTRACTOR SHALL POST THE AVAILABLE FAULT CURRENT LETTER AND DATE OF CALCULATIONS PERFORMED ON THE MAIN SERVICE DISCONNECT.

DRAWING NOTES

1. COMBINATION POWER/DATA BOX OUTLET RATED FOR FOOT TRAFFIC. COORDINATE EXACT LOCATION WITH ARCHITECTURAL PLANS. LEGRAND RFBA SERIES, 4-GANG.
2. ONE 3/4" CONDUIT FOR POWER. ROUTE FROM POWER/DATA FLOOR BOX IN SLAB TO RECEPTACLE GANG BOX IN WALL CAVITY.
3. ONE 3/4" CONDUIT FOR DATA. ROUTE FROM POWER/DATA FLOOR BOX BELOW SLAB, INTO CEILING THROUGH WALL CAVITY. INSTALL BUSHING AT ENDS OF CONDUIT TO PROTECT DATA CABLES.
4. INSTALL GFCI RECEPTACLE IN CABINET AT END OF PENINSULA ISLAND PER NEC. COORDINATE INSTALLATION WITH CABINET INSTALLER.
5. ONE 3/4" CONDUIT FOR POWER. ROUTE FROM POWER/DATA FLOOR BOX, TIGHT ALONG STRUCTURE BELOW, BACK UP INTO WALL CAVITY AND TO RECEPTACLE.
6. ONE 3/4" CONDUIT FOR DATA. ROUTE FROM POWER/DATA FLOOR BOX, TIGHT ALONG STRUCTURE BELOW, BACK UP INTO WALL CAVITY AND ABOVE CEILING. INSTALL BUSHING AT ENDS OF CONDUIT TO PROTECT DATA CABLES.
7. CIRCUIT WIRED VIA LIGHTING CONTACTOR AND TIMECLOCK TC1.
8. PROVIDE WITH LOCK-OFF BREAKER PER NEC 422.31.
9. MAKE ELECTRIC CLOSET "DRY AND INDOOR" SPACE BY REPLACING DOORS WITH EXTERIOR RATED TYPE WITH WEATHER SEALS.

C

GRAPHICAL SCALE
0 4' 8' 16' 24'
1/8"=1'-0"

"I certify that these documents were prepared or approved by me, and that I am a duly licensed Engineer in the State of Maryland, License Number 39052, Expiration Date 12/23/2026."

STATE OF MARYLAND · TAIWAN ABRAMSON · No. 39052 · PROFESSIONAL ENGINEER

MEP Engineer
Abramson Engineering
3655-B Old Court Rd, Suite 24
Baltimore, MD 21208
(410) 259-9461

REVISIONS
- 3/30/2026 PERMIT SET

RENOVATION OF UNIVERSITY OF MARYLAND
MEDICAL CENTER OFFICE BUILDING
616 CHARLES STREET
LA PLATA, MARYLAND 20646

R.L. LITTEN & ASSOCIATES, ARCHITECTS, LLC
300 CHARLES STREET, SUITE 4
P.O. BOX 1920, LAPLATA, MD 20646 (301) 934-1471

DRAWN BY: AT
CHK'D BY: SA
PROJECT NO. 25-420

E100

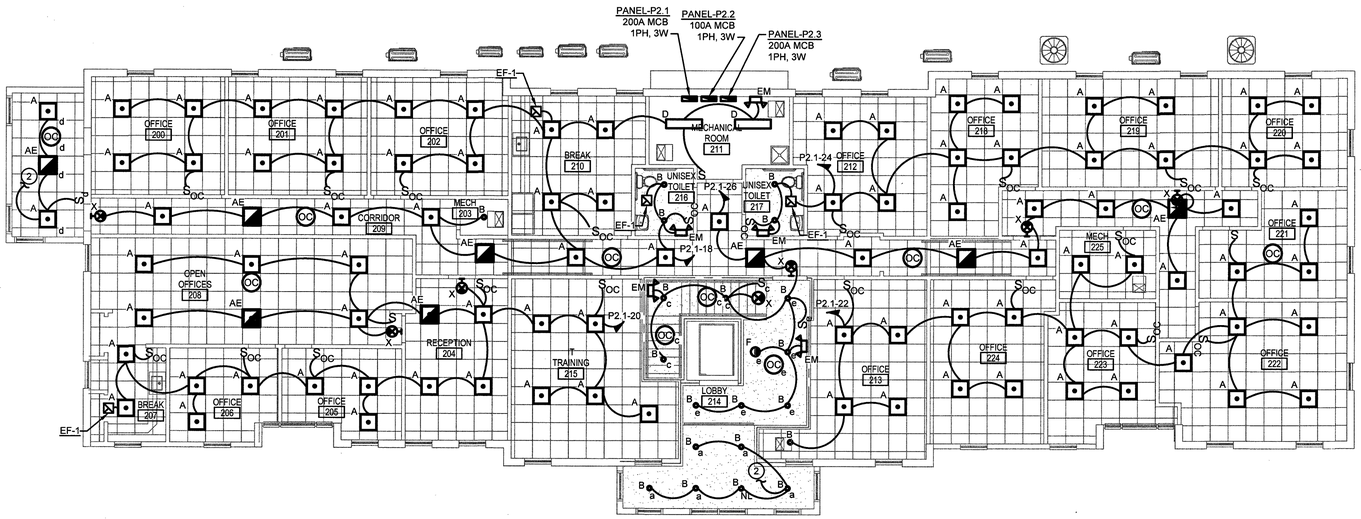

2 ELECTRICAL LIGHTING PLAN - SECOND FLOOR
SCALE: 1/8" = 1'-0"

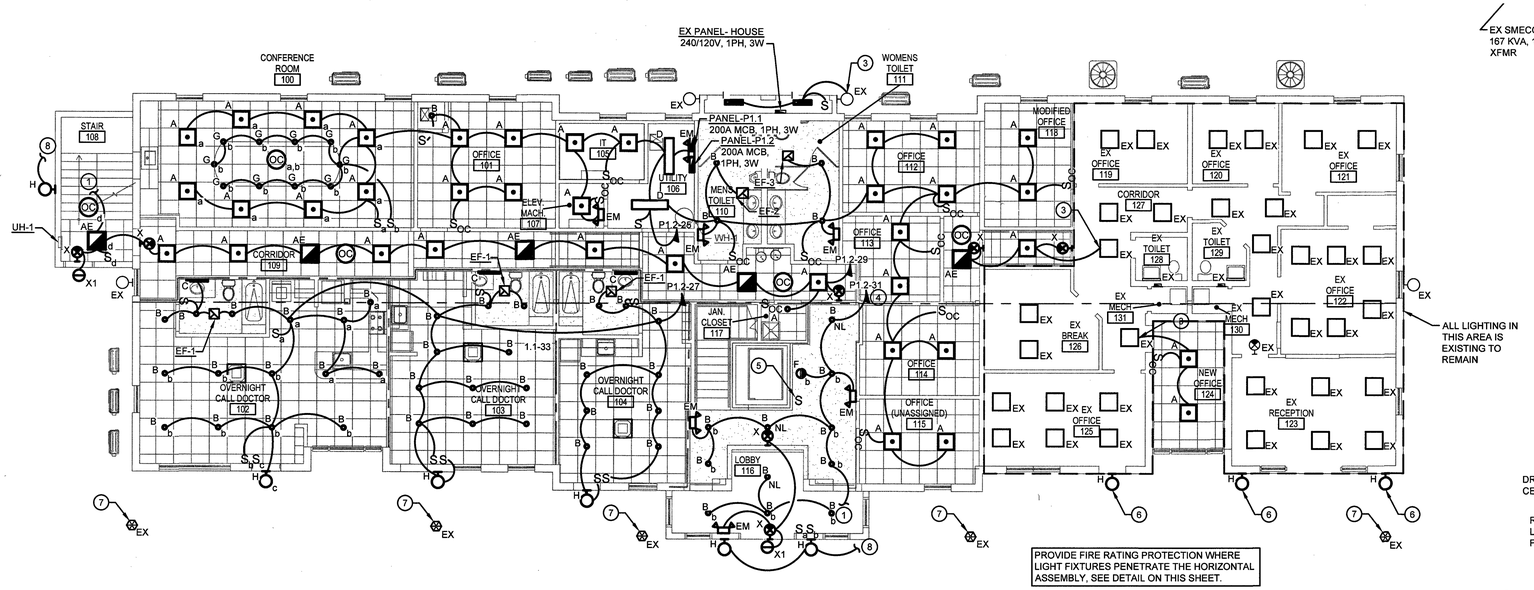

1 ELECTRICAL LIGHTING PLAN - FIRST FLOOR
SCALE: 1/8" = 1'-0"

PROVIDE FIRE RATING PROTECTION WHERE LIGHT FIXTURES PENETRATE THE HORIZONTAL ASSEMBLY, SEE DETAIL ON THIS SHEET.

GENERAL NOTES

1. CONTRACTOR SHALL FIELD VERIFY EXISTING CONDITIONS PRIOR TO START OF ANY WORK AND ADVISE ENGINEER OF ANY DISCREPANCIES.
2. REFER TO ARCHITECTURAL DRAWINGS FOR LIGHTING FIXTURE MOUNTING HEIGHTS.
3. ALL EMERGENCY EXIT SIGNS AND EMERGENCY WALL PACKS SHALL BE WIRED TO THE UN-SWITCHED PORTION OF THE LIGHTING CIRCUIT.
4. EMERGENCY LIGHT FIXTURES SHALL REMAIN ENERGIZED UPON LOSS OF POWER AND ASSOCIATED LIGHTING CONTROLS DEACTIVATED.
5. PROVIDE LOW VOLTAGE CONTROL WIRE FROM SWITCH TO EACH FIXTURE FOR ALL LIGHT FIXTURES WITH 0-10V DIMMING CAPABILITY.
6. CONTRACTOR SHALL PROGRAM AND COMMISSION LIGHTING CONTROL SYSTEM PER LIGHTING CONTROL SCHEDULE AND IN ACCORDANCE WITH IECC-2021. PROVIDE OWNER WITH FULLY OPERATIONAL SYSTEM.
7. SEE LIGHTING CONTROL SCHEDULE ON SHEET E400 FOR LIGHTING CONTROL SEQUENCE AND ASSOCIATED CONTROL COMPONENTS.
8. ALL LIGHTING AND RECESSED FIXTURES, DEVICES, ELECTRICAL EQUIPMENT, ETC., SHALL BE SUPPORTED BY THE BUILDING STRUCTURE.
9. MOUNT EMERGENCY BATTERY WALL PACK LIGHT FIXTURES AT 7.5' ABOVE FINISHED FLOOR.

DRAWING NOTES

1. SEE SECOND FLOOR PLAN ON THIS SHEET FOR CONTINUATION OF LIGHTING CIRCUIT.
2. SEE FIRST FLOOR PLAN ON THIS SHEET FOR CONTINUATION OF LIGHTING CIRCUIT.
3. CONNECT TO EXISTING LIGHTING CIRCUIT.
4. CIRCUIT WIRED VIA LIGHTING CONTACTOR AND TIMECLOCK TC1.
5. TIMECLOCK TC1, CHANNEL #1 OVERRIDE SWITCH.
6. REPLACE EXISTING LIGHTING FIXTURE AND KEEP EXISTING WIRING AND SWITCHING INTACT.
7. EXISTING LIGHT POLE ANMD WIRING TO REMAIN.
8. WIRE NEW EXTERIOR LIGHT FIXTURES TO EXISTING EXTERIOR LIGHTING CIRCUIT.

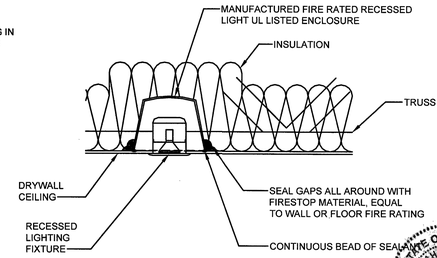

3 RECESSED LIGHTING FIXTURE RATING DETAIL
SCALE: NTS

STATE OF MARYLAND · TASNIM ABRAMSON · No. 39052 · PROFESSIONAL ENGINEER

"I certify that these documents were prepared or approved by me, and that I am a duly licensed Engineer in the State of Maryland, License Number 39052, Expiration Date 12/23/2026."

GRAPHICAL SCALE
0 4' 8' 16' 24'
1/8"=1'-0"

MEP Engineer
Abramson Engineering
3655-B Old Court Rd, Suite 24
Baltimore, MD 21208
(410) 259-9461

REVISIONS
- 3/30/2026 PERMIT SET

RENOVATION OF UNIVERSITY OF MARYLAND
MEDICAL CENTER OFFICE BUILDING
616 CHARLES STREET
LA PLATA, MARYLAND 20646

R.L. LITTEN & ASSOCIATES, ARCHITECTS, LLC
300 CHARLES STREET, SUITE 4
P.O. BOX 1920, LAPLATA, MD 20646 (301) 934-1471

DRAWN BY: AT
CHK'D BY: SA
PROJECT NO. 25-420

E200

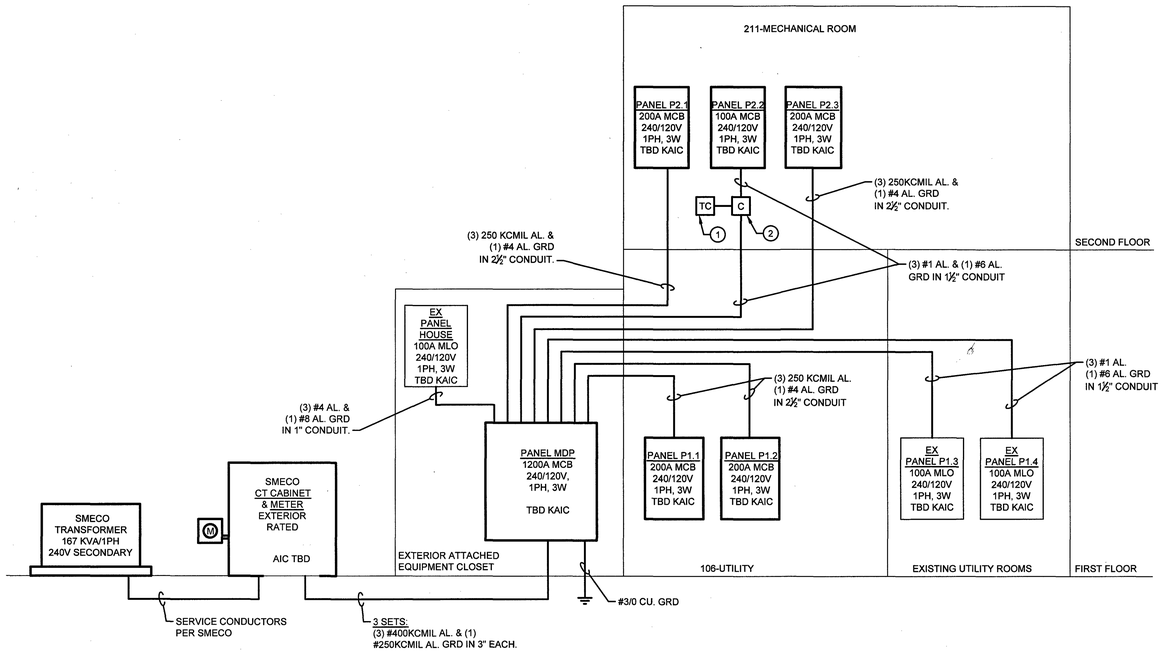

1 ELECTRICAL RISER DIAGRAM
SCALE: NTS

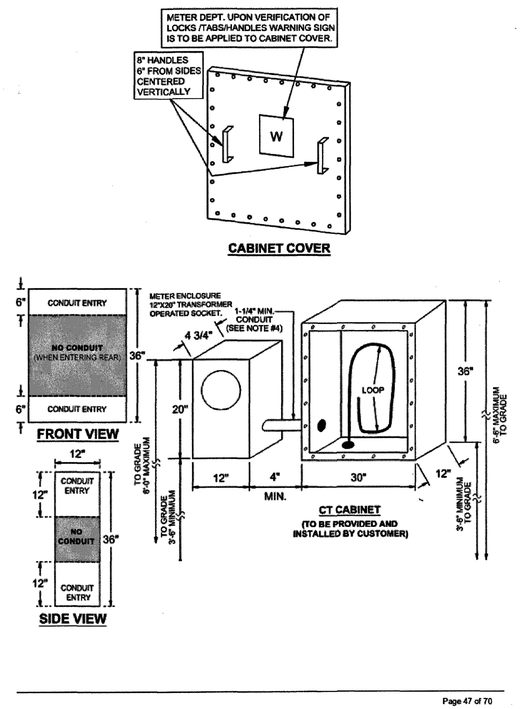

2 SMECO CT CABINET REQUIREMENTS DETAIL
SCALE: NTS

GENERAL NOTES

1. CONTRACTOR SHALL FIELD VERIFY EXISTING CONDITIONS PRIOR TO START OF ANY WORK AND ADVISE ENGINEER OF ANY DISCREPANCIES.
2. CONTRACTOR SHALL MEET WITH UTILITY METER INSPECTOR ON SITE TO REVIEW DRAWINGS AND COORDINATE SERVICE POINT BEFORE COMMENCING ANY WORK. SERVICE POINT SHOWN ON THESE DRAWINGS IS SUBJECT TO CHANGE.
3. CONTRACTOR SHALL POST THE AVAILABLE FAULT CURRENT LETTER AND DATE OF CALCULATIONS PERFORMED ON THE MAIN SERVICE PANEL.

DRAWING NOTES

(1) 7-DAY PROGRAMMABLE TIME CLOCK (TC) FOR RECEPTACLE CONTROL. (COMPLY WITH 2021 IECC C405.11) INTERMATIC ET2725C OR EQUAL.

(2) 100A, 2 POLE CONTACTOR CONTROLLED BY TIMECLOCK.

NOTES:
1. CONTINUOUS GROUNDING ELECTRODE CONDUCTOR WITH NO SPLICES OR JOINTS. INSTALL PER NEC ARTICLE 250.
2. PROVIDE EXOTHERMIC WELD OR UL APPROVED CONNECTORS FOR ALL GROUND CONNECTIONS AS REQUIRED PER NEC (TYPICAL)

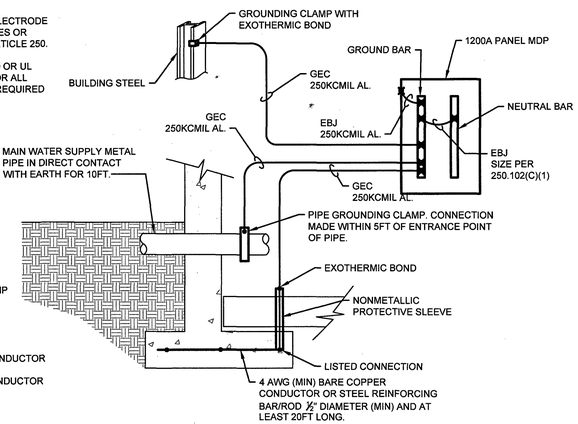

SYMBOLS
- UL LISTED GROUNDING CLAMP
- UL LISTED CONNECTORS
- EXOTHERMIC WELD

GEC GROUNDING ELECTRODE CONDUCTOR

EGC EQUIPMENT GROUNDING CONDUCTOR

EBJ BONDING JUMPER

3 GROUNDING DETAIL
SCALE: NTS

REVISIONS
- 3/30/2026 PERMIT SET

RENOVATION OF UNIVERSITY OF MARYLAND
MEDICAL CENTER OFFICE BUILDING
616 CHARLES STREET
LA PLATA, MARYLAND 20646

R.L. LITTEN & ASSOCIATES, ARCHITECTS, LLC
300 CHARLES STREET, SUITE 4
P.O. BOX 1920, LAPLATA, MD 20646 (301) 934-1471

STATE OF MARYLAND
JOSHUA ABRAMSON
No. 39052
PROFESSIONAL ENGINEER

"I certify that these documents were prepared or approved by me, and that I am a duly licensed Engineer in the State of Maryland, License Number 39052, Expiration Date 12/23/2026."

MEP Engineer
Abramson Engineering
3655-B Old Court Rd, Suite 24
Baltimore, MD 21208
(410) 259-9461

DRAWN BY: AT
CHK'D BY: SA
PROJECT No. 25-420

E300

GENERAL NOTES

1. CONTRACTOR SHALL FIELD VERIFY EXISTING CONDITIONS PRIOR TO START OF ANY WORK AND ADVISE ENGINEER OF ANY DISCREPANCIES.

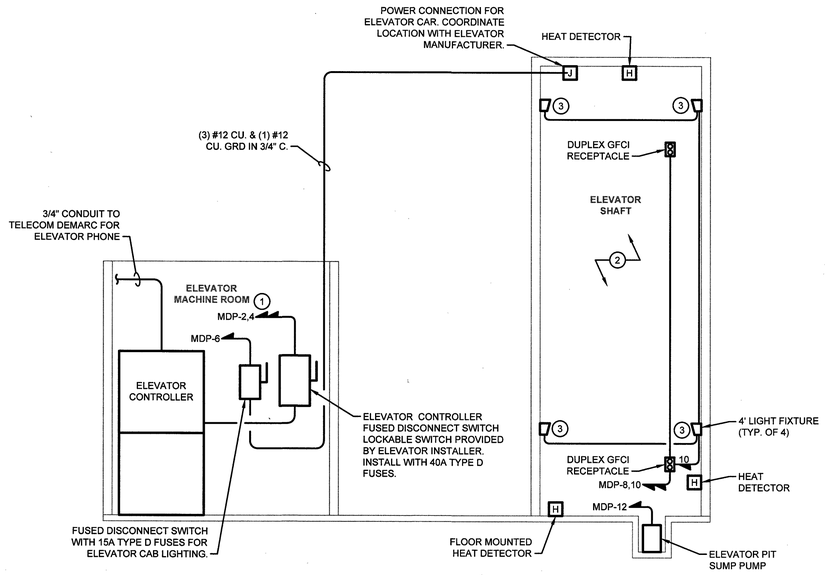

1 ELEVATOR SHAFT DETAIL
SCALE: NTS

ELEVATOR DRAWING NOTES

1. ELECTRICIAN TO TERMINATE ELEVATOR POWER FEED IN CONDUIT FROM MAIN LINE BREAKER IN PANEL MDP DIRECTLY TO DISCONNECT SUPPLIED BY ELEVATOR VENDOR. COORDINATE WITH ELEVATOR INSTALLER.
2. COORDINATE LOCATIONS AND CONNECTIONS OF ALL ELECTRICAL EQUIPMENT INCLUDING RECEPTACLES AND LIGHTS WITH ELEVATOR MANUFACTURER.
3. LIGHTS CONTROLLED BY SWITCH. INSTALL SWITCH(ES) PER MANUFACTURER'S REQUIREMENTS. POWER TO FIXTURE BATTERY CHARGER IS CONTINUOUS AND USED AS A SIGNAL TO TURN THE FIXTURE LAMPS ON IN EVENT OF A POWER FAILURE. FIXTURES TO HAVE 90 MINUTE BATTERY BACKUP.

ELEVATOR RECALL AND SHUTDOWN SCOPE AND SEQUENCE

1. SMOKE DETECTORS IN EACH LANDING INITIATE ELEVATOR RECALL BY MEANS OF AN CONTACT BROUGHT FROM THE FACP TO THE ELEVATOR CONTROLLER IN 3/4" C. COORDINATE WIRING AND LOCATION WITH ELEVATOR CONTRACTOR.
2. HEAT DETECTOR IN THE TOP AND BOTTOM PF ELEVATOR HOISTWAY SHALL BE ADDED TO THE FIRE ALARM SYSTEM AND ACTIVATE THE ELEVATOR SHUNT TRIP BREAKER.

2 PANEL REQUIREMENTS DETAIL
SCALE: NTS

REVISIONS
- 3/30/2026 PERMIT SET

RENOVATION OF UNIVERSITY OF MARYLAND
MEDICAL CENTER OFFICE BUILDING
616 CHARLES STREET
LA PLATA, MARYLAND 20646

R.L. LITTEN & ASSOCIATES, ARCHITECTS, LLC
300 CHARLES STREET, SUITE 4
P.O. BOX 1920, LAPLATA, MD 20646 (301) 934-1471

STATE OF MARYLAND
SHAWN ABRAMSON
No. 39052
PROFESSIONAL ENGINEER

"I certify that these documents were prepared or approved by me, and that I am a duly licensed Engineer in the State of Maryland, License Number 39052, Expiration Date 12/23/2026."

MEP Engineer
Abramson Engineering
3655-B Old Court Rd, Suite 24
Baltimore, MD 21208
(410) 259-9461

DRAWN BY: AT
CHK'D BY: SA
PROJECT NO: 25-420

E301

LIGHTING & RECEPTACLE ZONE CONTROL SCHEDULE - IECC 2021

INDEX	ROOM NO.	LIGHTING ZONE	LIGHTING CONTROL	TOTAL ZONE WATTS	OCCUPANCY SENSOR	TIME SWITCH CONTROL	OCC SENSOR CONTROL		LIGHT REDUCTION	DAYLIGHT CONTROLS	RECEPTACLE CONTROL	SCHEDULE NOTES	MANUFACTURER & MODEL N/A.
							ON	OFF					
1	100	CONFERENCE ROOM	WALL SWITCH WITH CEILING OCC SENSOR	362	YES	NO	MANUAL	MANUAL&AUTO: 20 MIN	N/A	N/A	TIMECLOCK		LUTRON MAESTRO MS-Z101 W/ REMOTE CEILING OCC
2	101	OFFICE (ENCLOSED OFFICE)	WALL OCC. SENSOR SWITCH	95	YES	NO	MANUAL	MANUAL&AUTO: 20 MIN	N/A	N/A	TIMECLOCK		LUTRON MAESTRO MS-Z101
3	102	OVERNIGHT CALL DOCTOR (DWELLING UNIT)	2 POLE TOGGLE SWITCH	152	NO	NO	N/A	N/A	N/A	N/A	N/A		-
4	103	OVERNIGHT CALL DOCTOR (DWELLING UNIT)	2 POLE TOGGLE SWITCH	126	NO	NO	N/A	N/A	N/A	N/A	N/A		-
5	104	OVERNIGHT CALL DOCTOR (DWELLING UNIT)	2 POLE TOGGLE SWITCH	108	NO	NO	N/A	N/A	N/A	N/A	N/A		-
6	105	IT (STORAGE 50 - 1000SF)	WALL OCC. SENSOR SWITCH	43	YES	NO	MANUAL	MANUAL&AUTO: 20 MIN	N/A	N/A	N/A		LUTRON MAESTRO MS-Z101
7	106	UTILITY (STORAGE 50 - 1000SF)	2 POLE TOGGLE SWITCH	38	YES	NO	MANUAL	MANUAL&AUTO: 20 MIN	N/A	N/A	N/A	2	-
8	107	ELEVATOR MACHINERY (STORAGE < 50 SF)	WALL OCC. SENSOR SWITCH	22	YES	NO	MANUAL	MANUAL&AUTO: 20 MIN	N/A	N/A	N/A		LUTRON MAESTRO MS-Z101
9	108	STAIRWELL	2 POLE TOGGLE SWITCH	86	NO	NO	N/A	N/A	N/A	N/A	N/A	1.2	-
10	109	CORRIDOR < 8 FT WIDE	OCC. SENSOR, NO MANUAL CONTROL REQUIRED	215	YES	NO	AUTO TO 100%	AUTO REDUCE TO 50% AFTER 20 MIN.	N/A	N/A	N/A	3	LEVITON ACY-15DIW
11	110	MENS TOILET (RESTROOM)	WALL OCC. SENSOR SWITCH	17	YES	NO	AUTO TO 100%	MANUAL&AUTO: 20 MIN	N/A	N/A	N/A	3	LUTRON MAESTRO MS-Z101
12	111	WOMENS TOILET (RESTROOM)	WALL OCC. SENSOR SWITCH	17	YES	NO	AUTO TO 100%	MANUAL&AUTO: 20 MIN	N/A	N/A	N/A	3	LUTRON MAESTRO MS-Z101
13	112	OFFICE (ENCLOSED OFFICE)	WALL OCC. SENSOR SWITCH	86	YES	NO	MANUAL	MANUAL&AUTO: 20 MIN	N/A	N/A	TIMECLOCK		LUTRON MAESTRO MS-Z101
14	113	OFFICE (ENCLOSED OFFICE)	WALL OCC. SENSOR SWITCH	43	YES	NO	MANUAL	MANUAL&AUTO: 20 MIN	N/A	N/A	TIMECLOCK		LUTRON MAESTRO MS-Z101
15	114	OFFICE (ENCLOSED OFFICE)	WALL OCC. SENSOR SWITCH	43	YES	NO	MANUAL	MANUAL&AUTO: 20 MIN	N/A	N/A	TIMECLOCK		LUTRON MAESTRO MS-Z101
16	115	OFFICE (ENCLOSED OFFICE)	WALL OCC. SENSOR SWITCH	43	YES	NO	MANUAL	MANUAL&AUTO: 20 MIN	N/A	N/A	TIMECLOCK		LUTRON MAESTRO MS-Z101
17	116	LOBBY	TIMECLOCK	91	NO	YES	N/A	N/A	0-10V	N/A	N/A		-
18	117	JANITOR CLOSET (STORAGE < 50SF)	WALL OCC. SENSOR SWITCH	22	YES	NO	MANUAL	MANUAL&AUTO: 20 MIN	N/A	N/A	N/A		LUTRON MAESTRO MS-Z101
19	118	MODIFIED OFFICE (ENCLOSED OFFICE)	WALL OCC. SENSOR SWITCH	43	YES	NO	MANUAL	MANUAL&AUTO: 20 MIN	N/A	N/A	EXISTING		LUTRON MAESTRO MS-Z101
20	124	NEW OFFICE (ENCLOSED OFFICE)	WALL OCC. SENSOR SWITCH	43	YES	NO	MANUAL	MANUAL&AUTO: 20 MIN	N/A	N/A	TIMECLOCK		LUTRON MAESTRO MS-Z101
21	200	OFFICE (ENCLOSED OFFICE)	WALL OCC. SENSOR SWITCH	86	YES	NO	MANUAL	MANUAL&AUTO: 20 MIN	N/A	N/A	TIMECLOCK		LUTRON MAESTRO MS-Z101
22	201	OFFICE (ENCLOSED OFFICE)	WALL OCC. SENSOR SWITCH	86	YES	NO	MANUAL	MANUAL&AUTO: 20 MIN	N/A	N/A	TIMECLOCK		LUTRON MAESTRO MS-Z101
23	202	OFFICE (ENCLOSED OFFICE)	WALL OCC. SENSOR SWITCH	86	YES	NO	MANUAL	MANUAL&AUTO: 20 MIN	N/A	N/A	TIMECLOCK		LUTRON MAESTRO MS-Z101
24	203	MECHANICAL (STORAGE < 50 SF)	WALL OCC. SENSOR SWITCH	9	YES	NO	MANUAL	MANUAL&AUTO: 20 MIN	N/A	N/A	N/A		LUTRON MAESTRO MS-Z101
25	204	RECEPTION (LOBBY)	WALL OCC. SENSOR SWITCH	86	YES	NO	MANUAL	MANUAL&AUTO: 20 MIN	N/A	N/A	N/A		LUTRON MAESTRO MS-Z101
26	205	OFFICE (ENCLOSED OFFICE)	WALL OCC. SENSOR SWITCH	65	YES	NO	MANUAL	MANUAL&AUTO: 20 MIN	N/A	N/A	TIMECLOCK		LUTRON MAESTRO MS-Z101
27	206	OFFICE (ENCLOSED OFFICE)	WALL OCC. SENSOR SWITCH	65	YES	NO	MANUAL	MANUAL&AUTO: 20 MIN	N/A	N/A	TIMECLOCK		LUTRON MAESTRO MS-Z101
28	207	BREAKROOM	WALL OCC. SENSOR SWITCH	43	YES	NO	MANUAL	MANUAL&AUTO: 20 MIN	N/A	N/A	N/A		LUTRON MAESTRO MS-Z101
29	208	OPEN OFFICES (> 300 SF)	WALL SWITCH WITH CEILING OCC SENSOR	129	YES	NO	AUTO TO 100%	MANUAL&AUTO: 20 MIN	N/A	N/A	TIMECLOCK		LUTRON MAESTRO MS-Z101 W/ REMOTE CEILING OCC
30	209	CORRIDOR < 8 FT WIDE	OCC. SENSOR, NO MANUAL CONTROL REQUIRED	366	YES	NO	AUTO TO 100%	AUTO REDUCE TO 50% AFTER 20 MIN.	N/A	N/A	N/A	3	LEVITON ACY-15DIW
31	210	BREAKROOM	WALL OCC. SENSOR SWITCH	86	YES	NO	MANUAL	MANUAL&AUTO: 20 MIN	N/A	N/A	TIMECLOCK		LUTRON MAESTRO MS-Z101
32	211	MECHANICAL (STORAGE 50 - 1000 SF)	2 POLE TOGGLE SWITCH	38	YES	NO	MANUAL	MANUAL&AUTO: 20 MIN	N/A	N/A	N/A	2	-
33	212	OFFICE (ENCLOSED OFFICE)	WALL OCC. SENSOR SWITCH	86	YES	NO	MANUAL	MANUAL&AUTO: 20 MIN	N/A	N/A	TIMECLOCK		LUTRON MAESTRO MS-Z101
34	213	OFFICE (ENCLOSED OFFICE)	WALL OCC. SENSOR SWITCH	108	YES	NO	MANUAL	MANUAL&AUTO: 20 MIN	N/A	N/A	TIMECLOCK		LUTRON MAESTRO MS-Z101
35	214	LOBBY (ZONE OPEN TO FIRST FLOOR)	TIMECLOCK	52	NO	YES	N/A	N/A	0-10V	N/A	N/A		-
36	214	LOBBY (OVER SECOND FLOOR LOBBY)	WALL SWITCH WITH CEILING OCC SENSOR	74	YES	NO	MANUAL	MANUAL&AUTO: 20 MIN	0-10V	N/A	N/A		LUTRON MAESTRO MS-Z101 W/ REMOTE CEILING OCC
37	214	INTERIOR EXIT STAIR	2 POLE TOGGLE SWITCH	0	NO	NO	N/A	N/A	N/A	N/A	N/A	1.2	-
38	215	IT TRAINING (CLASSROOM)	WALL OCC. SENSOR SWITCH	108	YES	NO	MANUAL	MANUAL&AUTO: 20 MIN	N/A	N/A	TIMECLOCK		LUTRON MAESTRO MS-Z101
39	216	UNISEX TOILET (RESTROOM)	WALL OCC. SENSOR SWITCH	17	YES	NO	AUTO TO 100%	MANUAL&AUTO: 20 MIN	N/A	N/A	N/A	3	LUTRON MAESTRO MS-Z101
40	217	UNISEX TOILET (RESTROOM)	WALL OCC. SENSOR SWITCH	17	YES	NO	AUTO TO 100%	MANUAL&AUTO: 20 MIN	N/A	N/A	N/A	3	LUTRON MAESTRO MS-Z101
41	218	OFFICE (ENCLOSED OFFICE)	WALL OCC. SENSOR SWITCH	108	YES	NO	MANUAL	MANUAL&AUTO: 20 MIN	N/A	N/A	TIMECLOCK		LUTRON MAESTRO MS-Z101
42	219	OFFICE (ENCLOSED OFFICE)	WALL OCC. SENSOR SWITCH	86	YES	NO	MANUAL	MANUAL&AUTO: 20 MIN	N/A	N/A	TIMECLOCK		LUTRON MAESTRO MS-Z101
43	220	OFFICE (ENCLOSED OFFICE)	WALL OCC. SENSOR SWITCH	86	YES	NO	MANUAL	MANUAL&AUTO: 20 MIN	N/A	N/A	TIMECLOCK		LUTRON MAESTRO MS-Z101
44	221	OFFICE (ENCLOSED OFFICE)	WALL SWITCH WITH CEILING OCC SENSOR	65	YES	NO	MANUAL	MANUAL&AUTO: 20 MIN	N/A	N/A	TIMECLOCK		LUTRON MAESTRO MS-Z101 W/ REMOTE CEILING OCC
45	222	OFFICE (ENCLOSED OFFICE)	WALL OCC. SENSOR SWITCH	108	YES	NO	MANUAL	MANUAL&AUTO: 20 MIN	N/A	N/A	TIMECLOCK		LUTRON MAESTRO MS-Z101
46	223	OFFICE (ENCLOSED OFFICE)	WALL OCC. SENSOR SWITCH	86	YES	NO	MANUAL	MANUAL&AUTO: 20 MIN	N/A	N/A	TIMECLOCK		LUTRON MAESTRO MS-Z101
47	224	OFFICE (ENCLOSED OFFICE)	WALL OCC. SENSOR SWITCH	86	YES	NO	MANUAL	MANUAL&AUTO: 20 MIN	N/A	N/A	TIMECLOCK		LUTRON MAESTRO MS-Z101
48	225	MECHANICAL (STORAGE 50 - 1000 SF)	WALL OCC. SENSOR SWITCH	43	YES	NO	MANUAL	MANUAL&AUTO: 20 MIN	N/A	N/A	N/A		LUTRON MAESTRO MS-Z101

GENERAL NOTES:

- All switches shall be white unless otherwise noted.
- Label all switches for room served.
- Time-clocks shall have the following functions:
  - Automatically turn off lights based on programmed schedule.
  - Have a minimum 7-day clock
  - Be capable of being set for seven different day types per week.
  - Incorporate an automatic holiday "shutoff" feature.
  - Have 10 hour battery backup.
  - Have a manual override switch for 2hours (max).
- **Contractor shall program and commission lighting system to operate based on this schedule.**

SCHEDULE NOTES:

1. Lighting controls are not required in the following areas:
   - 1.1 Areas designated as security or emergency areas that are required to be continuously lighted.
   - 1.2 Interior exit stairways, interior exit ramps and exit passageways.
   - 1.3 Luminaires that are required to have specific application controls.
   - 1.4 Spaces where patient care is directly provided.
   - 1.5 Spaces where an automatic shutoff would endanger occupant safety or security.
   - 1.6 Lighting intended for continuous operation.
   - 1.7 Shop and laboratory classrooms.
2. Automatic light control is not permitted in working spaces with electrical equipment.
3. Full automatic-on controls with no manual control shall be permitted in corridors,interior parking areas, stairways, restrooms, locker rooms, lobbies, library stacks and areas where manual operation would endanger occupant safety or security.
4. Light reduction is not required in the following cases:
   - 4.1 Where zone is provided with occupany sensor or daylight responsive controls.
   - 4.2 Where zone is controlled by special application controls.
   - 4.3 Spaces that have only one luminaire with a rated power of less than60 watts.
   - 4.4 Spaces that use less than 0.45 W/SQFT.
   - 4.5 Corridors, lobbies, electrical rooms and/or mechanical rooms.
5. Daylight controls are not required in the following cases:
   - 5.1 Spaces with less than 150 watts of general lighting within primary sidelit or toplight daylight zones.
   - 5.2 Sidelit daylight zones on the first floor above grade in Group A-2 and Group M occupancies.
   - 5.3 Healthcare facilites where patient care is directly provided.

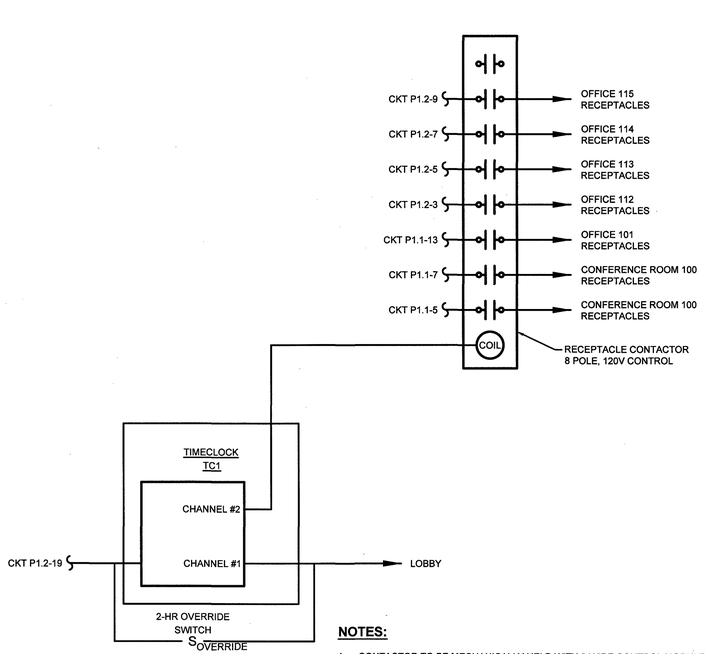

NOTES:

1. CONTACTOR TO BE MECHANICALLY HELD WITH 2-WIRE CONTROL MODULE, 120V COIL AND 20AMP FULLY RATED CONTACTS.
2. TIME CLOCK SHALL BE DIGITAL, 2-CHANNEL INTERMATIC ET2725C OR EQUAL

1 RECEPTACLE/LIGHTING CONTACTOR CONTROL SCHEMATIC

SCALE: NONE

LIGHTING FIXTURE SCHEDULE

TYPE	DESCRIPTION	LAMP TYPE	LUMENS	WATTS	LIGHT TEMPERATURE	DIMMING	MOUNTING	MANUFACTURER	MODEL NO
A	24"x24" LED TROFFER	LED	2924	21.5	3500	0-10V	RECESSED	HE WILLIAMS	PT-22-L26-835-RA-DIM-UNV
AE	24"x24" LED TROFFER WITH EMERGENCY BATTERY BACKUP	LED	-	10	-	-	RECESSED	HE WILLIAMS	PT-22-L26-835-RA-EM/10W-DIM-UNV
B	6" LED CAN LIGHT	LED	1000	8.7	3500	0-10V	RECESSED	HE WILLIAMS	6DR-TL-L10-835-DIM-UNV-RW-OF-CS
C	LED VANITY LIGHT BAR	LED	BY CLIENT						
D	1'x4' LED LIGHT	LED	2626	18.8	3500	0-10V	RECESSED	HE WILLIAMS	PT-14-L27-835-RA-DIM-UNV
EM	LED DUAL HEAD EMERGENCY LIGHT WITH BATTERY BACKUP	LED	-	1	-	-	WALL	COOPER LIGHTING SURE-LITES	AP2SQLED30
F	LED RECESSED SPOT LIGHT	LED	BY CLIENT						
G	LED PENDANT LIGHT	LED	2000	19	3500	0-10V	CEILING	HE WILLIAMS	6DR-TL-L20-835-DIM-UNV-RW-OF-CS
H	WALL MOUNT EXTERIOR WALL SCONCE	LED	1200	12	3500	N/A	WALL	PER ARCHITECT	PER ARCHITECT
I	2' NARROW STRIP LIGHT WITH EMERGENCY BATTERY BACKUP	LED	1500	108	3500	N/A	CEILING	HE WILLIAMS	75R-2-L15/835-EM/10WLP
X	EXIT LIGHT WITH BATTERY BACKUP	LED	-	3	-	-	WALL	COOPER LIGHTING SURE-LITES	SCX70R
X1	EXIT LIGHT REMOTE HEAD	LED	-	3	-	-	WALL	COOPER LIGHTING	APWR SERIES

NOTES:

1. FIXTURE HAS 0-10V DIMMING, PROVIDE LOW VOLTAGE CONTROL WIRE FROM SWITCH TO EACH FIXTURE.
2. PROVIDE EMERGENCY RELAY WITH LIGHT FIXTURES NOTED AS EMERGENCY W/ BATTERY BACKUP

REVISIONS

- 3/30/2026 PERMIT SET

RENOVATION OF UNIVERSITY OF MARYLAND MEDICAL CENTER OFFICE BUILDING

616 CHARLES STREET
LA PLATA, MARYLAND 20646

R.L. LITTEN & ASSOCIATES, ARCHITECTS, LLC
300 CHARLES STREET, SUITE 4
P.O. BOX 1920, LAPLATA, MD 20646 (301) 934-1471

STATE OF MARYLAND
TRISHA ABRAMSON
No. 39052
PROFESSIONAL ENGINEER

"I certify that these documents were prepared or approved by me, and that I am a duly licensed Engineer in the State of Maryland, License Number 39052, Expiration Date 12/23/2026."

MEP Engineer
Abramson Engineering
3655-B Old Court Rd, Suite 24
Baltimore, MD 21208
(410) 259-9461

DRAWN BY: AT
CHK'D BY: SA

PROJECT NO: 25-420

E400

Interior Lighting Compliance Certificate

Project Information

Energy Code: 2021 IECC
Project Title: UM MEDICAL OFFICES
Location: La Plata, Maryland
Climate Zone: 4a
Project Type: Alteration

Construction Site: **Owner/Agent:** **Designer/Contractor:**

Allowed Interior Lighting Power

A Area Category	B Floor Area (ft2)	C Allowed Watts / ft2	D Allowed Watts
1-100 - CONFERENCE ROOM (Common Space Types:Conference/Meeting/Multipurpose)	428	0.97	
2-101 - OFFICE (Common Space Types:Office - Enclosed)	216	0.74	
3-107 - ELEV. MACH. (Common Space Types:Storage <50 sq.ft.)	25	0.38	
4-105 - IT (Common Space Types:Storage >=50 - <=1000 sq.ft.)	59	0.36	
5-106 - UTILITY (Common Space Types:Storage >=50 - <=1000 sq.ft.)	82	0.38	
6-109 - CORRIDOR (Common Space Types:Corridor/Transition <8 ft wide)	367	0.41	
7-110 - MENS TOILET (Common Space Types:Restrooms)	106	0.63	
8-111 - WOMENS TOILET (Common Space Types:Restrooms)	119	0.63	
9-112 - OFFICE (Common Space Types:Office - Enclosed)	155	0.74	
10-113 - OFFICE (Common Space Types:Office - Enclosed)	95	0.74	
11-114 - OFFICE (Common Space Types:Office - Enclosed)	135	0.74	
12-115 - OFFICE (Common Space Types:Office - Enclosed)	127	0.74	
13-116 - LOBBY (Common Space Types:Lobby - General)	335	0.84	
14-117 - JANITOR CLOSET (Common Space Types:Storage <50 sq.ft.)	16	0.38	
15-118 - OFFICE (Common Space Types:Office - Enclosed)	132	0.74	
16-200 - OFFICE (Common Space Types:Office - Enclosed)	195	0.74	
17-201 - OFFICE (Common Space Types:Office - Enclosed)	203	0.74	
18-202 - OFFICE (Common Space Types:Office - Enclosed)	199	0.74	
19-203 - MECH (Common Space Types:Storage <50 sq.ft.)	21	0.38	
20-204 - RECEPTION (Common Space Types:Lobby - General)	201	0.84	
21-205 - OFFICE (Common Space Types:Office - Enclosed)	124	0.74	
22-206 - OFFICE (Common Space Types:Office - Enclosed)	132	0.74	
23-207 - BREAKROOM (Common Space Types:Lounge/Breakroom)	88	0.59	
24-208 - OPEN OFFICES (Common Space Types:Office - Open Plan)	411	0.61	
25-209 - CORRIDOR (Common Space Types:Corridor/Transition <8 ft wide)	655	0.41	
26-210 - BREAK (Common Space Types:Lounge/Breakroom)	219	0.59	

A Area Category	B Floor Area (ft2)	C Allowed Watts / ft2	D Allowed Watts
27-211 - MECHANICAL (Common Space Types:Storage >=50 - <=1000 sq.ft.)	127	0.38	
28-212 - OFFICE (Common Space Types:Office - Enclosed)	219	0.74	
29-213 - OFFICE (Common Space Types:Office - Enclosed)	241	0.74	
30-214 - LOBBY (Common Space Types:Lobby - General)	207	0.84	
31-215 - IT TRAINING (Common Space Types:Classroom/Lecture/Training)	321	0.71	
33-216 - UNISEX TOILET (Common Space Types:Restrooms)	49	0.63	
33-217 - UNISEX TOILET (Common Space Types:Restrooms)	49	0.63	
34-218 - OFFICE (Common Space Types:Office - Enclosed)	185	0.74	
35-219 - OFFICE (Common Space Types:Office - Enclosed)	236	0.74	
36-220 - OFFICE (Common Space Types:Office - Enclosed)	168	0.74	
37-221 - OFFICE (Common Space Types:Office - Enclosed)	168	0.74	
38-222 - OFFICE (Common Space Types:Office - Enclosed)	294	0.74	
39-223 - OFFICE (Common Space Types:Office - Enclosed)	179	0.74	
40-224 - OFFICE (Common Space Types:Office - Enclosed)	237	0.74	
41-225 - MECHANICAL (Common Space Types:Storage >=50 - <=1000 sq.ft.)	52	0.38	
42-108 - STAIRWELL (Common Space Types:Stairwell)	129	0.49	
43-102 - OVERNIGHT CALL (Dormitory:Living Quarters)	537	0.5	
44-103 - OVERNIGHT CALL (Dormitory:Living Quarters)	388	0.5	
45-104 - OVERNIGHT CALL (Dormitory:Living Quarters)	314	0.5	
Total Allowed Watts:			6574

Proposed Interior Lighting Power

A Fixture ID : Description / Lamp / Wattage Per Lamp / Ballast	B # of Fixture	C Fixture Watt.	D (B X C)
1-100 - CONFERENCE ROOM (Common Space Types:Conference/Meeting/Multipurpose)			
A: A: LED:	8	21.5	172
G: G: LED:	10	30	300
2-101 - OFFICE (Common Space Types:Office - Enclosed)			
A: A: LED:	4	21.5	86
3-107 - ELEV. MACH. (Common Space Types:Storage <50 sq.ft.)			
A: A: LED:	1	21.5	21.5
4-105 - IT (Common Space Types:Storage >=50 - <=1000 sq.ft.)			
A: A: LED:	2	21.5	43
5-106 - UTILITY (Common Space Types:Storage >=50 - <=1000 sq.ft.)			
D: D: LED:	2	18.8	37.6
6-109 - CORRIDOR (Common Space Types:Corridor/Transition <8 ft wide)			
A: A: LED:	11	21.5	236.5
7-110 - MENS TOILET (Common Space Types:Restrooms)			
B: B: LED:	2	8.7	17.4
8-111 - WOMENS TOILET (Common Space Types:Restrooms)			
B: B: LED:	2	8.7	17.4
9-112 - OFFICE (Common Space Types:Office - Enclosed)			

A Fixture ID : Description / Lamp / Wattage Per Lamp / Ballast	B # of Fixture	C Fixture Watt.	D (B X C)
A: A: LED:	4	21.5	86
10-113 - OFFICE (Common Space Types:Office - Enclosed)			
A: A: LED:	2	21.5	43
11-114 - OFFICE (Common Space Types:Office - Enclosed)			
A: A: LED:	4	21.5	86
12-115 - OFFICE (Common Space Types:Office - Enclosed)			
A: A: LED:	4	21.5	86
13-116 - LOBBY (Common Space Types:Lobby - General)			
B: B: LED:	7	8.7	60.9
F: F: LED:	1	30	30
14-117 - JANITOR CLOSET (Common Space Types:Storage <50 sq.ft.)			
A: A: LED:	1	21.5	21.5
15-118 - OFFICE (Common Space Types:Office - Enclosed)			
A: A: LED:	2	21.5	43
16-200 - OFFICE (Common Space Types:Office - Enclosed)			
A: A: LED:	4	21.5	86
17-201 - OFFICE (Common Space Types:Office - Enclosed)			
A: A: LED:	4	21.5	86
18-202 - OFFICE (Common Space Types:Office - Enclosed)			
A: A: LED:	4	21.5	86
19-203 - MECH (Common Space Types:Storage <50 sq.ft.)			
B: B: LED:	1	8.7	8.7
20-204 - RECEPTION (Common Space Types:Lobby - General)			
A: A: LED:	6	21.5	129
21-205 - OFFICE (Common Space Types:Office - Enclosed)			
A: A: LED:	2	21.5	43
22-206 - OFFICE (Common Space Types:Office - Enclosed)			
A: A: LED:	2	21.5	43
23-207 - BREAKROOM (Common Space Types:Lounge/Breakroom)			
A: A: LED:	2	21.5	43
24-208 - OPEN OFFICES (Common Space Types:Office - Open Plan)			
A: A: LED:	10	21.5	215
25-209 - CORRIDOR (Common Space Types:Corridor/Transition <8 ft wide)			
A: A: LED:	16	21.5	344
26-210 - BREAK (Common Space Types:Lounge/Breakroom)			
A: A: LED:	4	21.5	86
27-211 - MECHANICAL (Common Space Types:Storage >=50 - <=1000 sq.ft.)			
D: D: LED:	2	18.8	37.6
28-212 - OFFICE (Common Space Types:Office - Enclosed)			
A: A: LED:	4	21.5	86
29-213 - OFFICE (Common Space Types:Office - Enclosed)			
A: A: LED:	7	21.5	150.5
30-214 - LOBBY (Common Space Types:Lobby - General)			
B: B: LED:	5	8.7	43.5
F: F: LED:	1	30	30

A Fixture ID : Description / Lamp / Wattage Per Lamp / Ballast	B # of Fixture	C Fixture Watt.	D (B X C)
31-215 - IT TRAINING (Common Space Types:Classroom/Lecture/Training)			
A: A: LED:	7	21.5	150.5
33-216 - UNISEX TOILET (Common Space Types:Restrooms)			
B: B: LED:	1	8.7	8.7
33-217 - UNISEX TOILET (Common Space Types:Restrooms)			
B: B: LED:	1	8.7	8.7
34-218 - OFFICE (Common Space Types:Office - Enclosed)			
A: A: LED:	5	21.5	107.5
35-219 - OFFICE (Common Space Types:Office - Enclosed)			
A: A: LED:	6	21.5	129
36-220 - OFFICE (Common Space Types:Office - Enclosed)			
A: A: LED:	4	21.5	86
37-221 - OFFICE (Common Space Types:Office - Enclosed)			
A: A: LED:	3	21.5	64.5
38-222 - OFFICE (Common Space Types:Office - Enclosed)			
A: A: LED:	7	21.5	150.5
39-223 - OFFICE (Common Space Types:Office - Enclosed)			
A: A: LED:	4	21.5	86
40-224 - OFFICE (Common Space Types:Office - Enclosed)			
A: A: LED:	6	21.5	129
41-225 - MECHANICAL (Common Space Types:Storage >=50 - <=1000 sq.ft.)			
A: A: LED:	2	21.5	43
42-108 - STAIRWELL (Common Space Types:Stairwell)			
A: A: LED:	4	21.5	86
43-102 - OVERNIGHT CALL (Dormitory:Living Quarters)			
B: B: LED:	10	8.7	87
C: C: LED:	1	30	30
44-103 - OVERNIGHT CALL (Dormitory:Living Quarters)			
B: B: LED:	6	8.7	52.2
C: C: LED:	1	30	30
45-104 - OVERNIGHT CALL (Dormitory:Living Quarters)			
B: B: LED:	6	8.7	52.2
C: C: LED:	1	30	30
Total Proposed Watts:			4235.9

Proposed Interior Lighting Controls

Fixture	Lighting Control
1-100 - CONFERENCE ROOM (Common Space Types:Conference/Meeting/Multipurpose)	
A: A: LED:	Occupancy Sensor
G: G: LED:	Occupancy Sensor
2-101 - OFFICE (Common Space Types:Office - Enclosed)	
A: A: LED:	Occupancy Sensor
3-107 - ELEV. MACH. (Common Space Types:Storage <50 sq.ft.)	
A: A: LED:	Occupancy Sensor

Fixture	Lighting Control
4-105 - IT (Common Space Types:Storage >=50 - <=1000 sq.ft.)	
A: A: LED:	Occupancy Sensor
5-106 - UTILITY (Common Space Types:Storage >=50 - <=1000 sq.ft.)	
D: D: LED:	Occupancy Sensor
6-109 - CORRIDOR (Common Space Types:Corridor/Transition <8 ft wide)	
A: A: LED:	Occupancy Sensor
7-110 - MENS TOILET (Common Space Types:Restrooms)	
B: B: LED:	Occupancy Sensor
8-111 - WOMENS TOILET (Common Space Types:Restrooms)	
B: B: LED:	Occupancy Sensor
9-112 - OFFICE (Common Space Types:Office - Enclosed)	
A: A: LED:	Occupancy Sensor
10-113 - OFFICE (Common Space Types:Office - Enclosed)	
A: A: LED:	Occupancy Sensor
11-114 - OFFICE (Common Space Types:Office - Enclosed)	
A: A: LED:	Occupancy Sensor
12-115 - OFFICE (Common Space Types:Office - Enclosed)	
A: A: LED:	Occupancy Sensor
13-116 - LOBBY (Common Space Types:Lobby - General)	
B: B: LED:	Interior Timeswitch
F: F: LED:	Interior Timeswitch
14-117 - JANITOR CLOSET (Common Space Types:Storage <50 sq.ft.)	
A: A: LED:	Occupancy Sensor
15-118 - OFFICE (Common Space Types:Office - Enclosed)	
A: A: LED:	Occupancy Sensor
16-200 - OFFICE (Common Space Types:Office - Enclosed)	
A: A: LED:	Occupancy Sensor
17-201 - OFFICE (Common Space Types:Office - Enclosed)	
A: A: LED:	Occupancy Sensor
18-202 - OFFICE (Common Space Types:Office - Enclosed)	
A: A: LED:	Occupancy Sensor
19-203 - MECH (Common Space Types:Storage <50 sq.ft.)	
B: B: LED:	Occupancy Sensor
20-204 - RECEPTION (Common Space Types:Lobby - General)	
A: A: LED:	Occupancy Sensor
21-205 - OFFICE (Common Space Types:Office - Enclosed)	
A: A: LED:	Occupancy Sensor
22-206 - OFFICE (Common Space Types:Office - Enclosed)	
A: A: LED:	Occupancy Sensor
23-207 - BREAKROOM (Common Space Types:Lounge/Breakroom)	
A: A: LED:	Occupancy Sensor
24-208 - OPEN OFFICES (Common Space Types:Office - Open Plan)	
A: A: LED:	Occupancy Sensor
25-209 - CORRIDOR (Common Space Types:Corridor/Transition <8 ft wide)	
A: A: LED:	Occupancy Sensor
26-210 - BREAK (Common Space Types:Lounge/Breakroom)	
A: A: LED:	Occupancy Sensor
27-211 - MECHANICAL (Common Space Types:Storage >=50 - <=1000 sq.ft.)	
D: D: LED:	Occupancy Sensor

Fixture	Lighting Control
28-212 - OFFICE (Common Space Types:Office - Enclosed)	
A: A: LED:	Occupancy Sensor
29-213 - OFFICE (Common Space Types:Office - Enclosed)	
A: A: LED:	Occupancy Sensor
30-214 - LOBBY (Common Space Types:Lobby - General)	
B: B: LED:	Interior Timeswitch
F: F: LED:	Interior Timeswitch
31-215 - IT TRAINING (Common Space Types:Classroom/Lecture/Training)	
A: A: LED:	Occupancy Sensor
33-216 - UNISEX TOILET (Common Space Types:Restrooms)	
B: B: LED:	Occupancy Sensor
33-217 - UNISEX TOILET (Common Space Types:Restrooms)	
B: B: LED:	Occupancy Sensor
34-218 - OFFICE (Common Space Types:Office - Enclosed)	
A: A: LED:	Occupancy Sensor
35-219 - OFFICE (Common Space Types:Office - Enclosed)	
A: A: LED:	Occupancy Sensor
36-220 - OFFICE (Common Space Types:Office - Enclosed)	
A: A: LED:	Occupancy Sensor
37-221 - OFFICE (Common Space Types:Office - Enclosed)	
A: A: LED:	Occupancy Sensor
38-222 - OFFICE (Common Space Types:Office - Enclosed)	
A: A: LED:	Occupancy Sensor
39-223 - OFFICE (Common Space Types:Office - Enclosed)	
A: A: LED:	Occupancy Sensor
40-224 - OFFICE (Common Space Types:Office - Enclosed)	
A: A: LED:	Occupancy Sensor
41-225 - MECHANICAL (Common Space Types:Storage >=50 - <=1000 sq.ft.)	
A: A: LED:	Occupancy Sensor
42-108 - STAIRWELL (Common Space Types:Stairwell)	
A: A: LED:	Manual Control
43-102 - OVERNIGHT CALL (Dormitory:Living Quarters)	
B: B: LED:	Manual Control
C: C: LED:	
44-103 - OVERNIGHT CALL (Dormitory:Living Quarters)	
B: B: LED:	Manual Control
C: C: LED:	
45-104 - OVERNIGHT CALL (Dormitory:Living Quarters)	
B: B: LED:	Manual Control
C: C: LED:	Manual Control

Interior Lighting PASSES

Interior Lighting Compliance Statement

Compliance Statement. The proposed interior lighting design represented in this document is consistent with the building plans, specifications, and other calculations submitted with this permit application. The proposed interior lighting systems have been designed to meet the 2021 IECC requirements in COMcheckWeb and to comply with any applicable mandatory requirements listed in the Inspection Checklist.

STATE OF MARYLAND
SAMIR ABRAMSON
No. 39052
PROFESSIONAL ENGINEER

"I certify that these documents were prepared or approved by me, and that I am a duly licensed Engineer in the State of Maryland, License Number 39052, Expiration Date 12/23/2026."

MEP Engineer
Abramson Engineering
3655-B Old Court Rd, Suite 24
Baltimore, MD 21208
(410) 259-9461

REVISIONS
- 3/30/2026 PERMIT SET

RENOVATION OF UNIVERSITY OF MARYLAND MEDICAL CENTER OFFICE BUILDING
616 CHARLES STREET
LA PLATA, MARYLAND 20646

R.L. LITTEN & ASSOCIATES, ARCHITECTS, LLC
300 CHARLES STREET, SUITE 4
P.O. BOX 1920, LAPLATA, MD 20646 (301) 934-1471

DRAWN BY: AT
CH'D BY: SA
PROJECT NO: 25-420

E401

PANEL-MDP

BUS:	1200A
MAIN:	1200A MCB
AIC:	TBD
ENTRY:	TOP

LOCATION:	106-UTILITY
SUPPLIED FROM	CT CABINET
ENCLOSURE:	NEMA 1
MOUNTING:	SURFACE

VOLTAGE	240 120
PHASE	1
WIRE	3 + GRD

CKT	GFCI/ AFCI	BREAKER POLE	BREAKER TRIP (AMP)	LOAD KVA	EQUIPMENT SERVED	LOAD (KVA) PH. A	LOAD (KVA) PH. B	EQUIPMENT SERVED	LOAD KVA	BREAKER TRIP (AMP)	BREAKER POLE	GFCI/ AFCI	CKT
1		2	30	3.3	HP-1.0 (3 TON)	5.1		ELEVATOR CONTROLLER	1.7	40	2		2
3				3.3			5.1		1.7				4
5		2	30	3.3	HP-1.1 (3 TON)	3.8		ELEVATOR CAR LTG	0.5	15	1		6
7				3.3			3.7	ELEVATOR SHAFT RECEPT	0.4	20	1		8
9		2	40	4.4	HP-2.0 (4 TON)	4.6		ELEVATOR SHAFT LTG	0.3	20	1		10
11				4.4			5.6	ELEVATOR SUMP PUMP	1.2	20	1		12
13		2	40	4.4	HP-2.1 (4 TON)	4.4		SPARE		20	1		14
15				4.4			25.3	PANEL-1.1	20.9	200	2		16
17		2	40	4.4	HP-2.2 (4 TON)	26.1			21.7				18
19				4.4			27.1	PANEL-1.2	22.7	200	2		20
21		2	30	3.3	HP-2.3 (3 TON)	25.7			22.4				22
23				3.3			14.6	EX PANEL-1.3	11.2	100	2		24
25		2	30	3.3	HP-2.4 (3 TON)	14.1			10.7				26
27				3.3			15.1	EX PANEL-1.4	11.8	100	2		28
29		2	60	3.0	EX PANEL-HOUSE	15.5			12.5				30
31				3.0			25.8	PANEL-2.1	22.8	200	2		32
33					SPACE	21.0			21.0				34
35					SPACE		10.4	PANEL-2.2	10.4	200	2		36
37					SPACE	8.6			8.6				38
39					SPACE		13.2	PANEL-2.3	13.2	200	2		40
41					SPACE	12.8			12.8				42
					TOTAL CONNECTED KVA	141.7	145.8		287				
					TOTAL CONNECTED AMPS	590.4	607.3		1198				

GENERAL NOTES:

* Confirm mechanical equipment breaker sizes with mechanical contractor and appliance breaker sizes with owner before commencing work.
* Receptacle demand based on NEC 220.44.
* For wire sizes, see branch circuit wire sizing chart.
*New circuits are listed in **bold.**

Load Type	Connected	Demand Factor	Demand
Receptacle	0.4	**	0.4
Lighting	0.3	125%	0.3
Panels	228.8	100%	228.8
HVAC	52.9	100%	52.9
Heat Pump Aux Heater	0.0	100%	0.0
Misc Power	5.2	100%	5.2
Total Connected [KVA]	**287**	**Total Demand[KVA]**	**288**
Total Connected [A]	**1198**	**Total Demand [A]**	**1198**

PANEL-P1.1

BUS:	200A
MAIN:	200A MCB
AIC:	TBD
ENTRY:	TOP

LOCATION:	106 - UTILITY
SUPPLIED FROM	MDP
ENCLOSURE:	NEMA 1
MOUNTING:	SURFACE

VOLTAGE	240 120
PHASE	1
WIRE	3 + GRD

CKT	GFCI/ AFCI	BREAKER POLE	BREAKER TRIP (AMP)	LOAD KVA	EQUIPMENT SERVED	LOAD (KVA) PH. A	LOAD (KVA) PH. B	EQUIPMENT SERVED	LOAD KVA	BREAKER TRIP (AMP)	BREAKER POLE	GFCI/ AFCI	CKT
1	2	1	20	0.2	GFI RECEPT - CONF.RM. 100 COUNTER	1.3		RECEPT -CALL DR 103	1.1	20	1	3	2
3	2	1	15	0.2	GFI RECEPT - CONF.RM. 100 COUNTER		1.4	RECEPT - CALL DR 103 REFRIG.	1.2	15	1	1	4
5		1	20	0.7	RECEPT - CONF. RM. 100	0.9		RECEPT - CALL DR 103 COUNTER	0.2	20	1	1	6
7		1	15	1.1	FLOOR RECEPT - CONF. RM. 100		1.3	RECEPT - CALL DR 103 BATHROOM	0.2	20	1	1	8
9	2	1	20	0.5	RECEPT - CONF. RM. 100 REFRIG.	1.4		RECEPT -CALL DR 104	0.9	20	1	3	10
11	2	1	20	0.5	RECEPT - CONF. RM. 100 REFRIG.		1.7	RECEPT - CALL DR 104 REFRIG.	1.2	20	1	1	12
13		1	20	0.9	RECEPT - OFFICE 101	1.1		RECEPT - CALL DR 104 COUNTER	0.2	20	1	1	14
15	3	1	20	1.1	RECEPT -CALL DR 102		1.3	RECEPT - CALL DR 104 COUNTER	0.2	20	1	1	16
17	1	1	20	1.2	RECEPT -CALL DR 102 WASHER	1.4		RECEPT - CALL DR 104 BATHROOM	0.2	20	1	1	18
19	2	2	30	2.3	RECEPT -CALL DR 102 DRYER		3.0	WATER FOUNTAIN - CORRIDOR 109	0.7	20	1	2	20
21				2.3		2.6		RECEPT - IT 105	0.4	20	1		22
23	1	1	20	1.0	RECEPT - CALL DR 102 REFRIG.		1.4	RECEPT - IT 105	0.4	20	1		24
25	1	1	20	0.4	RECEPT - CALL DR 102 COUNTER	0.7		RECEPT - IT 105	0.4	20	1		26
27	1	1	20	0.4	RECEPT - CALL DR 102 COUNTER		0.5	RECEPT - UTILITY 106	0.2	20	1	2	28
29	2	2	50	4.5	RECEPT -CALL DR 102 RANGE	4.7		RECEPT - ELEVATOR MACH. RM. 107	0.2	20	1	2	30
31				4.5			7.5	WH-1 (6KW)	3.0	40	2		32
33	1	1	20	0.1	RECEPT - CALL DR 102 BATHROOM	3.1			3.0				34
35		1	20	2.0	UH-1 (4KW) - STAIR 108		3.7	HP-1.8 (1 TON) (RM. 105 IT)	1.7	15	2		36
37				2.0		3.7			1.7				38
39					SPACE		0.0	SPACE					40
41					SPACE	0.0		SPACE					42
					TOTAL CONNECTED KVA	20.9	21.7		43				
					TOTAL CONNECTED AMPS	87.2	90.4		178				

GENERAL NOTES:

* Confirm mechanical equipment breaker sizes with mechanical contractor and appliance breaker sizes with owner before commencing work.
* Receptacle demand based on NEC 220.44.
* For wire sizes, see branch circuit wire sizing chart.
*New circuits are listed in **bold.**

Load Type	Connected	Demand Factor	Demand
Receptacle	9.2	**	9.2
Lighting	0.0	125%	0.0
Water Heater	6.0	100%	6.0
HVAC	3.5	100%	3.5
Misc Power	24.0	100%	24.0
Total Connected [KVA]	**43**	**Total Demand[KVA]**	**43**
Total Connected [A]	**178**	**Total Demand [A]**	**178**

PANEL-P1.2

BUS:	200A
MAIN:	200A MCB
AIC:	TBD
ENTRY:	TOP

LOCATION:	106 - UTILITY
SUPPLIED FROM	MDP
ENCLOSURE:	NEMA 1
MOUNTING:	SURFACE

VOLTAGE	240 120
PHASE	1
WIRE	3 + GRD

CKT	GFCI/ AFCI	BREAKER POLE	BREAKER TRIP (AMP)	LOAD KVA	EQUIPMENT SERVED	LOAD (KVA) PH. A	LOAD (KVA) PH. B	EQUIPMENT SERVED	LOAD KVA	BREAKER TRIP (AMP)	BREAKER POLE	GFCI/ AFCI	CKT
1	2	1	20	0.4	RECEPT. - TOILET 110,111	5.7		AHU-1.0 (3 TON)(RM. 101)	5.3	50	2		2
3		1	20	0.9	RECEPT. - OFFICE 112		6.2		5.3				4
5		1	20	1.1	RECEPT. - OFFICE 113	6.4		AHU-1.1 (3 TON)(RM. 112)	5.3	50	2		6
7		1	20	0.9	RECEPT. - OFFICE 114		6.2		5.3				8
9		1	20	0.9	RECEPT. - OFFICE 115	2.6		HP-1.4 (1 TON)(RM. 104)	1.7	15	2		10
11		1	20	1.1	RECEPT. - LOBBY 116		2.8		1.7				12
13	2	1	20	0.2	RECEPT. - JAN CLOSET 117	1.9		HP-1.5 (1 TON)(RM. 103)	1.7	15	2		14
15	2	1	20	0.7	EXTERIOR RECEPTS - FRONT		2.4		1.7				16
17	2	1	20	0.5	EXTERIOR RECEPTS - REAR	2.7		HP-1.6 (1 TON)(RM. 102)	2.2	20	2		18
19		1	20	0.1	TIMECLOCK TC1		2.3		2.2				20
21		1	20	0.5	RECEPT . - CORRIDOR 109	2.3		HP-1.7 (1 TON)(RM. 107 ELEV. MACH.	1.7	15	2		22
23		1	20		SPARE		1.7		1.7				24
25		1	20	0.8	LTG - RM. 100, 101, 105-115	0.8		SPACE					26
27	3	1	20	0.5	LTG - RM. 102, 103, 104		0.5	SPACE					28
29		1	20	0.3	LTG - CORRIDOR, STAIR	0.3		SPACE					30
31		1	20	0.2	LTG - LOBBY		0.2	SPACE					32
33					SPACE	0.0		SPACE					34
35					SPACE		0.0	SPACE					36
37					SPACE	0.0		SPACE					38
39					SPACE		0.0	SPACE					40
41					SPACE	0.0		SPACE					42
					TOTAL CONNECTED KVA	22.7	22.4		45				
					TOTAL CONNECTED AMPS	94.5	93.2		188				

GENERAL NOTES:

* Confirm mechanical equipment breaker sizes with mechanical contractor and appliance breaker sizes with owner before commencing work.
* Receptacle demand based on NEC 220.44.
* For wire sizes, see branch circuit wire sizing chart.
*New circuits are listed in **bold.**

Load Type	Connected	Demand Factor	Demand
Receptacle	7.2	**	7.2
Lighting	1.9	125%	2.3
Kitchen	0.0	65%	0.0
HVAC	35.9	100%	35.9
Misc Power	0.1	100%	0.1
Total Connected [KVA]	**45**	**Total Demand[KVA]**	**46**
Total Connected [A]	**188**	**Total Demand [A]**	**190**

EXISTING PANEL-P1.3

BUS:	100A
MCB:	MLO
MLO:	100A
AIC:	EXISTING

LOCATION:	EX MECH RM
SUPPLIED FROM	MDP
ENCLOSURE:	NEMA 1
MOUNTING:	SURFACE

VOLTAGE	240 120
PHASE	1
WIRE	3 + GRD

CKT	GFCI/ AFCI	BREAKER POLE	BREAKER TRIP (AMP)	LOAD KVA	EQUIPMENT SERVED	LOAD (KVA) PH. A	LOAD (KVA) PH. B	EQUIPMENT SERVED	LOAD KVA	BREAKER TRIP (AMP)	BREAKER POLE	GFCI/ AFCI	CKT
1					SPACE	0.0		SPACE					2
3					SPACE		0.0	SPACE					4
5		1	20	0.5	RECEPTACLES	4.0		HP-1.2 (3-TON)	3.5	50	2		6
7		1	20	0.5	RECEPTACLES		4.0		3.5				8
9		1	20	0.5	COPIER	1.0		RECEPTACLES	0.5	20	1		10
11		1	20	0.5	RECEPTACLES		1.0	RECEPTACLES	0.5	20	1		12
13		2	60	5.3	EX AHU-1.2 W/ 10.5 KW BACKUP HEAT	6.3		HOT WATER HEATER	1.0	20	1		14
15				5.3			5.8	LIGHTING	0.5	20	1		16
					TOTAL CONNECTED KVA	11.2	10.7		22				
					TOTAL CONNECTED AMPS	46.8	44.8		92				

GENERAL NOTES:

* Confirm mechanical equipment breaker sizes with mechanical contractor and appliance breaker sizes with owner before commencing work.
* Receptacle demand based on NEC 220.44.
* For wire sizes, see branch circuit wire sizing chart.
*New circuits are listed in **bold.**

Load Type	Connected	Demand Factor	Demand
Receptacle	2.5	**	2.5
Lighting	0.5	125%	0.6
HVAC	7.0	100%	7.0
Water Heater	1.0	100%	1.0
Heat Pump Aux Heater	10.5	100%	10.5
Misc Power	0.5	100%	0.5
Total Connected [KVA]	**22**	**Total Demand[KVA]**	**22**
Total Connected [A]	**92**	**Total Demand [A]**	**92**

EXISTING PANEL-P1.4

BUS:	100A
MCB:	MLO
MLO:	100A
AIC:	EXISTING

LOCATION:	EX MECH
SUPPLIED FROM	MDP
ENCLOSURE:	NEMA 1
MOUNTING:	SURFACE

VOLTAGE	240 120
PHASE	1
WIRE	3 + GRD

CKT	GFCI/ AFCI	BREAKER POLE	BREAKER TRIP (AMP)	LOAD KVA	EQUIPMENT SERVED	LOAD (KVA) PH. A	LOAD (KVA) PH. B	EQUIPMENT SERVED	LOAD KVA	BREAKER TRIP (AMP)	BREAKER POLE	GFCI/ AFCI	CKT
1					SPARE	0.0		SPARE					2
3					SPARE		0.7	**RECEPTACLE**	**0.7**	**20**	**1**		4
5		1	20	0.5	RECEPTACLES	4.0		HP-1.3 (3-TON)	3.5	50	2		6
7		1	20	0.5	RECEPTACLES		4.0		3.5				8
9		2	20	0.5	WALK IN BOX	1.0		RECEPTACLES	0.5	20	1		10
11				0.5			1.0	LIGHTING	0.5	20	1		12
13		2	60	5.3	EX AHU-1.3 W/ 10.5 KW BACKUP HEAT	6.8		WATER HEATER	1.5	50	2		14
15				5.3			6.8		1.5				16
					TOTAL CONNECTED KVA	11.8	12.5		24				
					TOTAL CONNECTED AMPS	49.1	51.9		101				

GENERAL NOTES:

* Confirm mechanical equipment breaker sizes with mechanical contractor and appliance breaker sizes with owner before commencing work.
* Receptacle demand based on NEC 220.44.
* For wire sizes, see branch circuit wire sizing chart.
*New circuits are listed in **bold.**

Load Type	Connected	Demand Factor	Demand
Receptacle	2.3	**	2.3
Lighting	0.5	125%	0.6
HVAC	7.0	100%	7.0
Water Heater	3.0	100%	3.0
Heat Pump Aux Heater	10.5	100%	10.5
Misc Power	0.0	100%	0.0
Total Connected [KVA]	**23**	**Total Demand[KVA]**	**23**
Total Connected [A]	**97**	**Total Demand [A]**	**97**

BRANCH CIRCUIT WIRE SIZING

BREAKER SIZE	WIRING - AWG SIZE, THHN COPPER (75°C) PH. *NOTE 1	NETURAL	GROUND	CONDUIT [IN]
15	#12	1-#12	1-#12	3/4
20	#12	1-#12	1-#12	3/4
25	#10	1-#10	1-#10	3/4
30	#10	1-#10	1-#10	3/4
35	#8	1-#8	1-#10	3/4
40	#8	1-#8	1-#10	3/4"
50	#8	1-#8	1-#10	3/4
60	#6	1-#6	1-#10	1
70	#4	1-#4	1-#8	1-1/4
80	#4	1-#4	1-#8	1-1/4
90	#3	1-#3	1-#8	1-1/4
100	#3	1-#3	1-#8	1-1/4

NOTES:

1. QUANTITY OF WIRE TO MATCH NUMBER OF POLES LISTED ON PANEL SCHEDULE.

2. NON-METALLIC CABLE MAY BE USED WHERE ALLOWED BY NATIONAL ELECTRIC CODE. CONTRACTOR TO OBTAIN INSPECTOR APPROVAL BEFORE INSTALLING.

"I certify that these documents were prepared or approved by me, and that I am a duly licensed Engineer in the State of Maryland, License Number 39052, Expiration Date 12/23/2026."

MEP Engineer
Abramson Engineering
3655-B Old Court Rd, Suite 24
Baltimore, MD 21208
(410) 259-9461

REVISIONS
- 3/30/2026 PERMIT SET

RENOVATION OF UNIVERSITY OF MARYLAND MEDICAL CENTER OFFICE BUILDING
616 CHARLES STREET
LA PLATA, MARYLAND 20646

R.L. LITTEN & ASSOCIATES, ARCHITECTS, LLC
300 CHARLES STREET, SUITE 4
P.O. BOX 1920, LAPLATA, MD 20646 (301) 934-1471

DRAWN BY: AT
CHK'D BY: SA

PROJECT NO: 25-420

E402

PANEL-P2.1

BUS:	200A
MAIN:	200A MCB
AIC:	TBD
ENTRY:	BOTTOM

LOCATION:	211 - MECHANICAL ROOM
SUPPLIED FROM	MDP
ENCLOSURE:	NEMA1
MOUNTING:	SURFACE

VOLTAGE	240	120
PHASE	1	
WIRE	3 + GRD	

CKT	GFCI/ AFCI	BREAKER POLE	BREAKER TRIP (AMP)	LOAD KVA	EQUIPMENT SERVED	LOAD (KVA) PH. A	LOAD (KVA) PH. B	EQUIPMENT SERVED	LOAD KVA	BREAKER TRIP (AMP)	BREAKER POLE	GFCI/ AFCI	CKT
1		1	20	0.9	RECEPT. MECH RM. 203, CORR. 209	6.8		AHU-2.0	5.9	60	2		2
3	2	1	20	0.4	RECEPT. BREAK RM. 207 COUNTER		6.2		5.9				4
5	2	1	20	0.4	RECEPT. BREAK RM. 207 COUNTER	6.2		AHU-2.1	5.9	60	2		6
7	2	1	20	0.2	RECEPT. BREAK RM. 210 COUNTER		6.0		5.9				8
9	2	1	20	0.2	RECEPT. BREAK RM. 210 COUNTER	6.0		AHU-2.2	5.9	60	2		10
11	2	1	20	1.0	RECEPT. BREAK RM. 210 REFRIG.		6.9		5.9				12
13	2	1	20	1.0	RECEPT. BREAK RM. 210 REFRIG.	1.9		RECEPT. LOBBY 214, CORRIDOR	0.9	20	1		14
15		1	20	0.5	RECEPT. BREAK RM. 210		0.9	RECEPT. TOILET 216,217	0.4	20	1	2	16
17		1	20	0.4	RECEPT. MECH RM. 211	0.9		LIGHTING	0.5	20	1		18
19					SPACE		0.5	LIGHTING	0.5	20	1		20
21					SPACE	0.5		LIGHTING	0.5	20	1		22
23					SPACE		0.5	LIGHTING	0.5	20	1		24
25					SPACE	0.5		LIGHTING	0.5	20	1		26
27					SPACE		0.0	SPARE		20	1		28
29					SPACE	0.0		SPARE		20	1		30
31					SPACE		0.0	SPARE		20	1		32
33					SPACE	0.0		SPACE					34
35					SPACE		0.0	SPACE					36
37					SPACE	0.0		SPACE					38
39					SPACE		0.0	SPACE					40
41					SPACE	0.0		SPACE					42
					TOTAL CONNECTED KVA	22.8	21.0		**44**				
					TOTAL CONNECTED AMPS	94.8	87.6		**182**				

GENERAL NOTES:

* Confirm mechanical equipment breaker sizes with mechanical contractor and appliance breaker sizes with owner before commencing work.
* Receptacle demand based on NEC 220.44.
* For wire sizes, see branch circuit wire sizing chart.
*New circuits are listed in **bold.**

Load Type	Connected	Demand Factor	Demand
Receptacle	6.1	**	6.1
Lighting	2.5	125%	3.1
Kitchen	0.0	65%	0.0
HVAC	35.2	100%	35.2
Water Heater	0.0	100%	0.0
Heat Pump Aux Heater	0.0	100%	0.0
Misc Power	0.0	100%	0.0
Total Connected [KVA]	**44**	**Total Demand[KVA]**	**44**
Total Connected [A]	**182**	**Total Demand [A]**	**185**

PANEL-P2.2

BUS:	100A
MAIN:	100A MCB
AIC:	TBD
ENTRY:	BOTTOM

LOCATION:	211 - MECHANICAL ROOM
SUPPLIED FROM	MDP VIA TC AND CONTACTOR
ENCLOSURE:	NEMA1
MOUNTING:	SURFACE

VOLTAGE	240	120
PHASE	1	
WIRE	3 + GRD	

CKT	GFCI/ AFCI	BREAKER POLE	BREAKER TRIP (AMP)	LOAD KVA	EQUIPMENT SERVED	LOAD (KVA) PH. A	LOAD (KVA) PH. B	EQUIPMENT SERVED	LOAD KVA	BREAKER TRIP (AMP)	BREAKER POLE	GFCI/ AFCI	CKT
1		1	20	0.9	RECEPT. OFFICE 200	1.8		RECEPT. OFFICE 213	0.9	20	1		2
3		1	20	0.9	RECEPT. OFFICE 201		2.0	RECEPT. IT TRAINING 215	1.1	20	1		4
5		1	20	0.9	RECEPT. OFFICE 202	2.0		RECEPT. IT TRAINING 215	1.1	20	1		6
7		1	20	0.9	RECEPT. RECEPTION 204		1.8	RECEPT. IT TRAINING 215	0.9	20	1		8
9		1	20	0.9	RECEPT. OFFICE 205	1.8		RECEPT. OFFICE 218	0.9	20	1		10
11		1	20	0.9	RECEPT. OFFICE 206		1.8	RECEPT. OFFICE 219	0.9	20	1		12
13		1	20	1.3	RECEPT. OPEN OFFICES 208	2.2		RECEPT. OFFICE 220	0.9	20	1		14
15		1	20	1.3	RECEPT. OPEN OFFICES 208		2.2	RECEPT. OFFICE 221	0.9	20	1		16
17		1	20	0.9	RECEPT. OFFICE 212	1.8		RECEPT. OFFICE 222	0.9	20	1		18
19		1	20		SPARE		0.9	RECEPT. OFFICE 223	0.9	20	1		20
21		1	20		SPARE	0.9		RECEPT. OFFICE 224	0.9	20	1		22
23					SPACE		0.0	SPACE					24
25					SPACE	0.0		SPACE					26
27					SPACE		0.0	SPACE					28
29					SPACE	0.0		SPACE					30
					TOTAL CONNECTED KVA	10.4	8.6		**19**				
					TOTAL CONNECTED AMPS	43.5	36.0		**80**				

GENERAL NOTES:

* Confirm mechanical equipment breaker sizes with mechanical contractor and appliance breaker sizes with owner before commencing work.
* Receptacle demand based on NEC 220.44.
* For wire sizes, see branch circuit wire sizing chart.
*New circuits are listed in **bold.**

Load Type	Connected	Demand Factor	Demand
Receptacle	19.1	**	14.5
Lighting	0.0	125%	0.0
Kitchen	0.0	65%	0.0
HVAC	0.0	100%	0.0
Water Heater	0.0	100%	0.0
Heat Pump Aux Heater	0.0	100%	0.0
Misc Power	0.0	100%	0.0
Total Connected [KVA]	**19**	**Total Demand[KVA]**	**15**
Total Connected [A]	**80**	**Total Demand [A]**	**61**

PANEL-P2.3

BUS:	200A
MAIN:	200A MCB
AIC:	TBD
ENTRY:	BOTTOM

LOCATION:	211 - MECHANICAL ROOM
SUPPLIED FROM	MDP
ENCLOSURE:	NEMA1
MOUNTING:	SURFACE

VOLTAGE	240	120
PHASE	1	
WIRE	3 + GRD	

CKT	GFCI/ AFCI	BREAKER POLE	BREAKER TRIP (AMP)	LOAD KVA	EQUIPMENT SERVED	LOAD (KVA) PH. A	LOAD (KVA) PH. B	EQUIPMENT SERVED	LOAD KVA	BREAKER TRIP (AMP)	BREAKER POLE	GFCI/ AFCI	CKT
1		2	30	2.3	WH-2 (4.5KW)	7.5		AHU-2.3	5.3	50	2		2
3				2.3			7.5		5.3				4
5		1	20		SPARE	5.3		AHU-2.4	5.3	50	2		6
7		1	20		SPARE		5.3		5.3				8
9		1	20		SPARE	0.4		RECEPT. MECH RM. 225	0.4	20	1		10
11		1	20		SPARE		0.0	SPARE		20	1		12
13		1	20		SPARE	0.0		SPARE		20	1		14
15					SPACE		0.0	SPACE					16
17					SPACE	0.0		SPACE					18
19					SPACE		0.0	SPACE					20
21					SPACE	0.0		SPACE					22
23					SPACE		0.0	SPACE					24
25					SPACE	0.0		SPACE					26
27					SPACE		0.0	SPACE					28
29					SPACE	0.0		SPACE					30
31					SPACE		0.0	SPACE					32
33					SPACE	0.0		SPACE					34
35					SPACE		0.0	SPACE					36
37					SPACE	0.0		SPACE					38
39					SPACE		0.0	SPACE					40
41					SPACE	0.0		SPACE					42
					TOTAL CONNECTED KVA	13.2	12.8		**26**				
					TOTAL CONNECTED AMPS	55.0	53.5		**108**				

GENERAL NOTES:

* Confirm mechanical equipment breaker sizes with mechanical contractor and appliance breaker sizes with owner before commencing work.
* Receptacle demand based on NEC 220.44.
* For wire sizes, see branch circuit wire sizing chart.
*New circuits are listed in **bold.**

Load Type	Connected	Demand Factor	Demand
Receptacle	0.4	**	0.4
Lighting	0.0	125%	0.0
Kitchen	0.0	65%	0.0
HVAC	21.2	100%	21.2
Water Heater	4.5	100%	4.5
Heat Pump Aux Heater	0.0	100%	0.0
Misc Power	0.0	100%	0.0
Total Connected [KVA]	**26**	**Total Demand[KVA]**	**26**
Total Connected [A]	**108**	**Total Demand [A]**	**108**

BRANCH CIRCUIT WIRE SIZING

BREAKER SIZE	WIRING - AWG SIZE, THHN COPPER (75°C) PH. *NOTE 1	NETURAL	GROUND	CONDUIT [IN]
15	#12	1-#12	1-#12	3/4
20	#12	1-#12	1-#12	3/4
25	#10	1-#10	1-#10	3/4
30	#10	1-#10	1-#10	3/4
35	#8	1-#8	1-#10	3/4
40	#8	1-#8	1-#10	3/4"
50	#8	1-#8	1-#10	3/4
60	#6	1-#6	1-#10	1
70	#4	1-#4	1-#8	1-1/4
80	#4	1-#4	1-#8	1-1/4
90	#3	1-#3	1-#8	1-1/4
100	#3	1-#3	1-#8	1-1/4

NOTES:

1. QUANTITY OF WIRE TO MATCH NUMBER OF POLES LISTED ON PANEL SCHEDULE.

2. NON-METALLIC CABLE MAY BE USED WHERE ALLOWED BY NATIONAL ELECTRIC CODE. CONTRACTOR TO OBTAIN INSPECTOR APPROVAL BEFORE INSTALLING.

"I certify that these documents were prepared or approved by me, and that I am a duly licensed Engineer in the State of Maryland, License Number 39052, Expiration Date 12/23/2026."

MEP Engineer
Abramson Engineering
3655-B Old Court Rd, Suite 24
Baltimore, MD 21208
(410) 259-9461

REVISIONS
- 3/30/2026 PERMIT SET

RENOVATION OF UNIVERSITY OF MARYLAND
MEDICAL CENTER OFFICE BUILDING
616 CHARLES STREET
LA PLATA, MARYLAND 20646

R.L. LITTEN & ASSOCIATES, ARCHITECTS, LLC
300 CHARLES STREET, SUITE 4
P.O. BOX 1920, LAPLATA, MD 20646 (301) 934-1471

DRAWN BY: AT
CHK'D BY: SA

PROJECT NO: 25-420

E403

PLUMBING NOTES

DIVISION 22 PLUMBING

22-0000 GENERAL REQUIREMENTS

SCOPE AND DRAWINGS

1. CONTRACTOR SHALL REFER TO ALL DRAWINGS AND SPECIFICATIONS IN THIS PACKAGE SUCH AS ARCHITECTURAL, STRUCTURAL, ELECTRICAL, AND PLUMBING. FULLY COORDINATE WITH ALL OTHER TRADES, OWNER, AND ARCHITECT REQUIREMENTS. ALL OF THE ABOVE-MENTIONED DRAWINGS AND SPECIFICATIONS ARE CONSIDERED A PART OF THE CONTRACT DOCUMENTS.
2. CONTRACTOR IS TO INSPECT THE SITE BEFORE SUBMITTING BID AND MAKE ALLOWANCES FOR ALL VISIBLE, SPECIFIED OR REASONABLY ANTICIPATED FIELD CONDITIONS. WHERE SIGNIFICANT DISCREPANCIES FROM THE DRAWINGS, EXISTING SITE CONDITIONS, SPECIFICATIONS OR OTHER TRADES CONFLICT, ARE TO BE IMMEDIATELY BROUGHT TO THE ATTENTION OF THE OWNER, ARCHITECT AND ENGINEER IN WRITING PRIOR TO SUBMITTAL OF BID.
3. THE DRAWINGS ARE DIAGRAMMATIC IN NATURE AND INDICATE THE GENERAL LOCATION AND INTENT OF THE SYSTEMS. AS SUCH DRAWINGS DO NOT INDICATE EVERY FITTING, ELBOW, OFFSET, VALVE, AND OTHER COMPONENTS NECESSARY TO INSURE PROPER INSTALLATION OF A WORKING SYSTEM. CONTRACTOR SHALL PROVIDE ALL NECESSARY FITTINGS, ACCESSORIES, AND AUXILIARY ITEMS TO INSTALL THE SYSTEM AS DIAGRAMMED.
4. DRAWINGS AND SPECIFICATIONS ARE INTENDED TO SUPPLEMENT EACH OTHER, WHEN IN CONFLICT, THE STRICTEST PROVISION SHALL GOVERN. IF ONE IS MISSING MATERIAL OR LABOR SCOPE, CONTRACTOR SHALL PROVIDE AS IF IT IS MENTIONED IN BOTH.
5. CONTRACTOR SHALL PROVIDE AND INSTALL ALL WORK EQUIPMENT AND MATERIALS AS INDICATED ON THE PROJECT DRAWINGS AND SPECIFICATIONS TO PROVIDE A COMPLETELY OPERATIONAL SYSTEM.
6. PROVIDE ALL SUPERVISION, LABOR, MATERIALS, EQUIPMENT MISCELLANEOUS ITEMS, SERVICES AND ACCESSORIES REQUIRED BY STANDARD INDUSTRY PRACTICE FOR SUCH INSTALLATIONS, AND FOR THE SAFE AND CORRECT OPERATION OF THE ENTIRE INSTALLATION.
7. PRODUCTS SHALL BE INSTALLED IN ACCORDANCE WITH MANUALS, GUIDELINES, OR INSTRUCTIONS FURNISHED BY THE PRODUCT MANUFACTURER.
8. COMPETENT MECHANICS AND SUBCONTRACTORS USING PROPER TOOLS AND EQUIPMENT SHALL PERFORM ALL WORK TO PRODUCE FIRST-QUALITY INSTALLATIONS. ALL WORK SHALL BE NEATLY INSTALLED, ACCESSIBLE FOR MAINTENANCE, AND COMPLETE WITH ALL ACCESSORIES REQUIRED.
9. COORDINATE ALL WORK WITH OTHER TRADES TO ENSURE ALL SYSTEMS FIT IN GIVEN SPACE SUCH AS ABOVE CEILINGS. ALL CEILING HEIGHTS INDICATED ON ARCHITECTURAL AND/OR INTERIOR DESIGN DRAWINGS AS WELL AS MINIMUM CLEARANCES REQUIRED BY LOCAL CODES SHALL BE MAINTAINED THROUGHOUT THE BUILDING.

APPLICABLE CODES

1. ALL WORK AND EQUIPMENT SHALL BE INSTALLED AND COMPLY WITH THE LOCAL CODES. THE CONTRACTOR SHALL COMPLY WITH THE LAWS, ORDINANCES, RULES, AND REGULATIONS OF ALL GOVERNMENTAL AND PUBLIC UTILITY AUTHORITIES HAVING JURISDICTION OF ANY OF THE SYSTEMS SPECIFIED.
2. ALL WORK SHALL CONFORM TO LOCAL AND STATE CODES AND TO APPLICABLE STATE LAWS AND, INCLUDING, BUT NOT LIMITED TO NATIONAL ELECTRIC CODE, IMC, IPC, IECC AND NFPA CODES. WHERE CODE REQUIRES A VARIATION FROM SPECIFIC INFORMATION IN CONTRACT DOCUMENTS, CONTRACTOR SHALL INCLUDE WORK REQUIRED TO COMPLY WITH CODE. CERTAIN CODE-REQUIRED ITEMS ARE MENTIONED IN THESE CRITERIA FOR EMPHASIS OR EXAMPLE ONLY. IDENTIFICATION AND COMPLIANCE WITH ALL APPLICABLE CODES AND REGULATIONS ARE THE CONTRACTOR'S RESPONSIBILITY.
3. CONTRACTOR SHALL OBTAIN AND PAY FOR ALL APPLICABLE PERMITS AND CERTIFICATES OF INSPECTION.
4. ALL WORK SHALL BE DONE IN ACCORDANCE WITH THE REQUIREMENTS OF THE OWNER'S INSURANCE CARRIER, INDUSTRY PRACTICE STANDARDS AND THE AMERICANS WITH DISABILITIES ACT (ADA). ADDITIONALLY, FOOD SERVICE FACILITIES MUST ADHERE TO THE PERTINENT DEPARTMENT OF HEALTH REGULATIONS, SANITARY CODES, AND ALL OTHER APPLICABLE CODES, LAWS, REGULATIONS AND DIRECTIVES.

GENERAL

1. CONTRACTOR SHALL BE RESPONSIBLE FOR CONSTRUCTION MEANS, METHODS, SEQUENCES AND WORKMAN SAFETY.
2. COORDINATE SEQUENCING OF INSTALLATION, PHASING OF EQUIPMENT DEMOLITION, SCHEDULE OF WORK, UTILITY SHUTDOWNS, PARKING, MATERIAL STAGING AND OTHER POTENTIALLY DISRUPTIVE ACTIVITIES WITH BUILDING MANAGEMENT.
3. THE DESIGN AND APPEARANCE OF ALL EXPOSED PIPING WHICH ARE VISIBLE FROM THE PUBLIC AREAS ARE CRITICAL TO THE OVERALL VISUAL EFFECT AND ARE SUBJECT TO DETAILED REVIEW AND APPROVAL BY THE OWNER.
4. ALL WATER AND VENT PIPING, CONDUIT SHALL BE INSTALLED AS HIGH AS REASONABLY POSSIBLE. ALL SANITARY PIPING SHALL BE INSTALLED BELOW THE SLAB AND AS TIGHT TO THE UNDERSIDE OF THE SLAB AS POSSIBLE.
5. PIPING SHALL BE INSTALLED CONCEALED ABOVE CEILINGS OR IN WALL CHASES UNLESS OTHERWISE NOTED. PIPING SHALL BE INSTALLED AS DIRECT AS POSSIBLE WITHOUT UNNECESSARY BENDS OR OFFSETS.
6. PIPING SHALL NOT BE INSTALLED OR ROUTED ABOVE OR BELOW ELECTRICAL PANELS AND EQUIPMENT, THROUGH ELEVATOR EQUIPMENT ROOMS, ELEVATOR SHAFTS, OR STAIRWAYS UNLESS THESE ITEMS SERVE THESE AREAS ONLY.
7. CONNECTIONS BETWEEN DISSIMILAR PIPING METALS SHALL BE MADE WITH SUITABLE DIELECTRIC UNIONS.
8. PIPE OPENINGS SHALL BE STORED WITH CAPS OR COVERINGS DURING INSTALLATION.
9. CONFIRM UTILITY COMPANY REQUIREMENTS AND CONNECTION POINTS IN THE FIELD PRIOR TO STARTING WORK.
10. IN CASE OF PARTIAL OCCUPANCY OF BUILDING, PERFORM THOSE ITEMS SPECIFICALLY MENTIONED AND OTHER ACTIVITIES THAT PRODUCE OBJECTIONABLE NOISE IN A MANNER PRESCRIBED BY OWNER AND IN A MANNER THAT DOES NOT INTERFERE WITH THE USE OF THE EXISTING FACILITY.
11. OWNER IS RESPONSIBLE FOR ASBESTOS AND ANY OTHER HAZARDOUS MATERIALS. SHOULD ANY BE DISCOVERED THAT HAS NOT BEEN REMOVED, DELAY WORK IN AFFECTED AREA AND CONTACT OWNER FOR DIRECTION.
12. CONTRACTOR SHALL REFER TO ARCHITECTURAL PLANS FOR APPROVED FLOOR PLAN DIMENSIONS AND EXACT COMPONENT LOCATIONS. DO NOT SCALE ENGINEERING DRAWINGS.

CUTTING, DRILLING, AND PATCHING

1. ALL CUTTING AND REPAIRING NECESSARY TO THE EXECUTION OF THIS WORK SHALL BE DONE AND REPAIRED BY CONTRACTOR. ALL OPENINGS IN FIRE RATED ENCLOSURES SHALL BE FIRE STOPPED. ALL OPENINGS SHALL BE FINISHED WITH NEAT TRIM OR FLANGES. PATCH AND FINISH AREAS DAMAGED AS A RESULT OF OPENINGS TO MATCH ADJACENT AREAS.
2. ALL OPENINGS MUST BE NEATLY SAW CUT, CORE-BORED, SLEEVED, GROUTED, SEALED AND MADE WATER AND FIREPROOF.
3. CONTRACTOR SHALL OBTAIN WRITTEN STRUCTURAL ENGINEER APPROVAL BEFORE DRILLING OR CUTTING STRUCTURAL COMPONENTS.
4. SEAL ALL OPENINGS AND PENETRATIONS THROUGH FIRE RATED WALLS AND PARTITIONS WITH FIRE RESISTANT SEALANT THAT WILL PREVENT THE PASSAGE OF FIRE AND SMOKE. SEALANT SHALL HAVE RATING EQUAL OR GREATER TO PENETRATED WALL.
5. REFER TO ARCHITECTURAL DRAWINGS FOR EXACT EQUIPMENT LOCATIONS BEFORE CUTTING.
6. ALL ROOF PENETRATIONS SHALL BE COMPLETED BY ROOFER OF RECORD SO AS NOT TO VOID THE WARRANTY. PROVIDE CURBS AT LEAST 12" HIGH FROM THE TOP OF THE FINISHED ROOF, FOR ALL ROOF OPENINGS AND EQUIPMENT MOUNTING. SUPPORT CURBS ON STRUCTURAL MEMBERS AND FLASH INTO ROOFING FOR WATER TIGHT SEAL.

EXISTING CONDITIONS:

1. WHEN EXISTING WORK IS REMOVED, PIPES AND CONDUITS SHALL BE REMOVED, INCLUDING HANGERS, TO A POINT BELOW FINISHED FLOORS OR BEHIND FINISHED WALLS AND CAPPED. SUCH POINT SHALL BE FAR ENOUGH BEHIND FINISHED SURFACES TO ALLOW FOR INSTALLATION OF NORMAL THICKNESS OF REQUIRED FINISH MATERIAL. EQUIPMENT SHALL BE REMOVED AND NOT ABANDONED IN PLACE UNLESS OTHERWISE NOTED. AS REQUESTED BY OWNER, EXISTING EQUIPMENT SHALL REMAIN THEIR PROPERTY AND BE DELIVERED TO THEM ON THE PREMISES WHERE DIRECTED. ALL OTHER MATERIALS AND EQUIPMENT THAT ARE REMOVED SHALL BECOME PROPERTY OF THE CONTRACTOR AND SHALL BE PROMPTLY REMOVED AND DISPOSED OF IN AN APPROVED MANNER.
2. WHEN WORK SPECIFIED CONNECTS TO EXISTING EQUIPMENT, PERFORM ALL NECESSARY ALTERATIONS, CUTTINGS, FITTINGS, ETC., OF EXISTING WORK AS MAY BE NECESSARY TO MAKE SATISFACTORY CONNECTIONS BETWEEN NEW AND EXISTING WORK, AND TO LEAVE COMPLETED WORK IN A FINISHED AND WORKMANLIKE CONDITION.
3. REMOVAL AND RELOCATION OF SOME EXISTING COMPONENTS MAY BE NECESSARY FOR THE COMPLETION OF THIS SCOPE. NOT ALL EXISTING CONDITIONS CAN BE COMPLETELY DETAILED ON THE DRAWINGS AND AS SUCH THE CONTRACTOR SHALL SURVEY THE SITE PRIOR TO BIDDING.
4. WHEN THE WORK REQUIRES RELOCATION OF EXISTING EQUIPMENT, PERFORM ALL WORK AND MAKE NECESSARY CHANGES TO EXISTING WORK AS MAY BE REQUIRED TO LEAVE COMPLETED WORK IN A FINISHED AND WORKMANLIKE CONDITION. WHERE EXISTING INSULATION IS DISTURBED, REPLACE INSULATION WHERE REMOVED OR DAMAGED EQUAL TO EXISTING, IN TYPE THICKNESS AND R VALUE.
5. ENGINEER HAS NOT FUNCTIONALLY TESTED EXISTING EQUIPMENT. WHERE EXISTING EQUIPMENT IS TO BE REUSED, CONTRACTOR SHALL ALLOW FOR REASONABLE CHECKING, ADJUSTMENT AND MINOR REPAIR TO RESTORE FULL FUNCTION. WORK WHICH IS REQUIRED AND WHICH IS BEYOND THAT DESCRIBED ABOVE OR ON THE PLANS SHALL BE BROUGHT TO THE ATTENTION OF THE OWNER, ARCHITECT AND ENGINEER.

SITE PROTECTION AND CLEAN UP

1. THE CONTRACTOR SHALL PROVIDE FOR HIS OWN CLEAN UP, REMOVAL AND DISPOSAL OF DAILY TRASH. THE CONTRACTOR SHALL KEEP CLEAN AND MAINTAIN EACH AREA FOR USE AFTER WORK IN THAT AREA IS COMPLETE.
2. THE CONTRACTOR SHALL BE RESPONSIBLE FOR THE PROTECTION OF HIS OWN WORK, MATERIALS, AND OTHER BELONGINGS FROM DAMAGE.
3. THE CONTRACTOR SHALL BE RESPONSIBLE FOR PROTECTING ALL OWNER-PROPERTY IN THE WORK AREA. ALL MATERIALS THAT CAN BE DAMAGED BY TEMPERATURE OR HUMIDITY EXCURSIONS SHALL BE REMOVED FROM THE WORK AREA AND STORED IN AN AIR-CONDITIONED ENVIRONMENT.
4. PROTECTION OF ROOF: THE ROOF SURROUNDING THE WORK AREA WHERE NEW EQUIPMENT IS TO BE DEMOLISHED OR INSTALLED SHALL BE PROTECTED WITH 1" INSULATION BOARD COVERED BY ½" PLYWOOD. SEAMS OF THE BOARD AND PLYWOOD SHALL BE STAGGERED SO NO ROOF MEMBRANE IS EXPOSED. FOLLOWING THE COMPLETION OF THE WORK, ALL DEBRIS IS TO BE CAREFULLY REMOVED FROM THE ROOF PRIOR TO REMOVAL OF THE ROOF PROTECTION.
5. PROVIDE TEMPORARY HEATERS TO MAINTAIN WORKING TEMPERATURES. DO NOT USE INSTALLED HVAC SYSTEMS FOR CONDITIONING DURING CONSTRUCTION.
6. WORK AREA SHALL BE COMPLETELY ENCLOSED AND SEALED FROM OCCUPIED AREAS. NEGATIVE PRESSURE SHALL BE MAINTAINED AT ALL TIMES DURING CONSTRUCTION ACTIVITIES SUCH AS DRYWALL SANDING, CUTTING AND GRINDING THAT RELEASE PARTICLES; OR ACTIVITIES SUCH AS GLUING, PAINTING OR WELDING THAT RELEASE GASEOUS CONTAMINANTS. CLOSE SUPPLY AIR OUTLETS AND RETURN AIR INLETS, CONNECT EXHAUST FAN TO EXHAUST SYSTEM OR TO BUILDING EXTERIOR AND OPERATE CONTINUOUSLY UNTIL COMPLETION OF ALL CONSTRUCTION ACTIVITIES.
7. PERFORM ALL ACTIVITIES THAT RELEASE PARTICLES, SUCH AS CUTTING AND SANDING, OR GASEOUS CONTAMINANTS, SUCH AS USE OF ADHESIVES AND PAINT, AT LEAST 72 HOURS PRIOR TO OCCUPANCY. FULLY FLUSH SPACE WITH FRESH AIR AS MUCH AS CONDITIONS PERMIT IN THE 72 HOURS PRIOR TO OCCUPANCY, BY OPENING DOORS, RUNNING HVAC UNITS AND EXHAUST FANS.

SUBMITTALS

1. CONTRACTOR SHALL SUBMIT SHOP DRAWINGS, CATALOG CUTS OR CERTIFIED PRINTS COVERING ITEMS OF MECHANICAL AND ELECTRICAL EQUIPMENT, INCLUDING BUT NOT LIMITED TO, THE FOLLOWING:

PIPING	VALVES	INSULATION	
PUMPS	BACKFLOW PREVENTERS	WATER HEATERS	
TANKS	PLUMBING FIXTURES	ALL OTHER PLUMBING EQUIPMENT	

2. CONTRACTOR SHALL CLEARLY INDICATE CHARACTERISTICS ON EACH REQUIRED SUBMITTAL AND CERTIFY THAT THE EQUIPMENT & MATERIALS REPRESENTED BY THE SUBMITTALS ARE IN COMPLIANCE WITH CONTRACT DOCUMENTS.
3. SUBMITTALS WILL BE REVIEWED FOR GENERAL COMPLIANCE WITH THE CONTRACT DOCUMENTS. SUBMITTAL REVIEW SHALL NOT RELIEVE THE CONTRACTOR OF COMPLIANCE WITH CONTRACT DOCUMENTS.
4. VERIFY ALL ELECTRICAL REQUIREMENTS FOR EQUIPMENT BEFORE ISSUING SUBMITTALS AND EQUIPMENT PURCHASE.
5. EQUIPMENT SHALL BE AS SCHEDULED AND MEET ALL REQUIREMENTS AND PERFORMANCE LISTED IN SCHEDULES. MANUFACTURERS LISTED ARE BASIS OF DESIGN. SUBSTITUTIONS ARE SUBJECT TO OWNER AND ENGINEER'S APPROVAL. IT IS THE CONTRACTOR'S RESPONSIBILITY TO RE-EVALUATE ANY SUBSTITUTED EQUIPMENT, REDESIGN IN ORDER TO COORDINATE THE SUBSTITUTION WITH THE SYSTEM AND CERTIFY THAT THE SUBSTITUTION IS EQUIVALENT TO BASIS OF DESIGN.

RECORD DRAWINGS

1. MAINTAIN RECORD SET OF PLANS AS WORK PROGRESSES, SHOWING ADDITIONS AND SUBSTITUTIONS FROM DESIGN AND CONCEALED WORK. AT COMPLETION, A RECORD SET OF PLANS SHALL BE TURNED OVER TO THE OWNER AND INCORPORATED INTO THE OPERATION AND MAINTENANCE MANUALS. AS BUILT SET SHALL BE COMPETED IN CAD OR CLEAN NEAT PDF FORMAT WITH MARK-UPS IN RED.

CLOSEOUT & WARRANTY

1. UPON COMPLETION OF WORK, THE CONTRACTOR SHALL REMOVE ALL DEBRIS & UNUSED MATERIALS AND THOROUGHLY CLEAN THE CONTRACT AREA.
2. PROVIDE OWNER WITH THREE BOUND COPIES OF ALL EQUIPMENT MANUFACTURER'S INSTALLATION, OPERATION AND MAINTENANCE MANUALS, TEST AND BALANCE REPORTS, RECORD DRAWINGS EQUIPMENT SUBMITTALS, PARTS DIAGRAMS, AND OTHER MATERIALS RECEIVED OR PRODUCED DURING CONSTRUCTION.
3. PROVIDE AT LEAST ONE DAY OF TRAINING TO OWNER'S PERSONNEL IN OPERATION OF EQUIPMENT AND PREVENTATIVE MAINTENANCE REQUIRED FOR EACH SYSTEM.
4. ALL WORK SHALL BE GUARANTEED AGAINST DEFECTS OF MATERIAL AND/OR WORKMANSHIP FOR A PERIOD OF ONE YEAR AFTER ACCEPTANCE OF THE WORK BY THE OWNER FOR THE BENEFICIAL USE THEREOF. THE CONTRACTOR WILL REMEDY ANY DEFECTS AND ANY DAMAGE RESULTING FROM THE WORK THAT OCCURS WITHIN THE PERIOD NAMED ABOVE.
5. REPAIR OR REPLACE WITHOUT MATERIAL AND LABOR CHARGE TO THE OWNER ALL ITEMS FOUND DEFECTIVE DURING THE WARRANTY PERIODS. IN THE CASE OF REPLACEMENT OR REPAIR DUE TO FAILURE WITHIN THE WARRANTY PERIOD, THE WARRANTY ON THAT PORTION OF THE WORK SHALL BE EXTENDED FOR A MINIMUM PERIOD OF ONE (1) YEAR FROM THE DATE OF SUCH REPLACEMENT OR REPAIR.

PLUMBING ABBREVIATIONS

ABBREVIATION	DESCRIPTION
Ø OR DIA	DIAMETER
AAV	AIR ADMITANCE VALVE
AFF	ABOVE FINISHED FLOOR
AP	ACCESS PANEL
BFP	BACK FLOW PREVENTER
BT	BATHTUB
BLDG	BUILDING
CLG	CEILING
CO	CLEAN OUT
CW	COLD WATER
DEG	DEGREES
DF	DRINKING FOUNTAIN
DFU	DAINAGE FIXTURE UNITS
DIA	DIAMETER
DN	DOWN
DW	DISHWASHER
DWH	DOMESTIC WATER HEATER
ETR	EXISTING TO REMAIN
EX	EXISTING
F	FAHRENHEIT
FCO	FLOOR CLEANOUT
FD	FLOOR DRAIN
FS	FLOOR SINK
G	GAS
GAL	GALLONS
GPF	GALLONS PER FLUSH
GPM	GALLONS PER MINUTE
HB	HOSE BIB
HP	HORSE POWER
HS	HAND SINK
HW	HOT WATER
HWR	HOT WATER RECIRCULATION
JAN	JANITOR
LAV	LAVATORY
LP	LIQUID PROPANE
MAX	MAXIMUM
MBH	1000 BTU/HR
MFR	MANUFACTURER
MIN	MINIMUM
MS	MOP/UTILITY SINK
NIC	NOT IN CONTRACT
NTS	NOT TO SCALE
PSI	POUNDS PER SQUARE INCH
PVC	POLYVINYL CHLORIDE
RH	RELATIVE HUMIDITY
RPZ	REDUCED PRESSURE BACKFLOW
RX	REMOVE EXISTING
SAN	SANITARY
SP	STATIC PRESSURE
TEMP	TEMPERATURE
TYP	TYPICAL
UR	URINAL
V	VENT
VTR	VENT THROUGH ROOF
WC	WATER CLOSET
WCO	WALL CLEANOUT
WSFU	WATER SUPPLY FIXTURE UNIT
WG	WATER GAUGE
XXX-1	EQUIPMENT DESIGNATION

PLUMBING LEGEND

SYMBOL	DESCRIPTION
	SANITARY PIPE (SAN)
	GREASE WASTE PIPE (GW)
	STORM WATER PIPE (ST)
	COLD WATER PIPE (CW)
	HOT WATER PIPE (HW)
	HOT WATER RECIRCULATION PIPE (HWR)
	DIALYSIS TREATED WATER (DW)
	VENT PIPE (V)
	GAS PIPE (G)
	GATE VALVE
	BALL VALVE
	BACK FLOW PREVENTER
	BACK WATER VALVE
	BALANCING VALVE
	PRESSURE REDUCING VALVE (PRV)
	OS&Y VALVE
	OS&Y VALVE (IN VERTICAL)
	BUTTERFLY VALVE
	THERMOSTATIC MIXING VALVE
	GAS COCK
	PRESSURE RELIEF VALVE
	REDUCER
	PIPE DOWN
	PIPE UP
	PIPE CAP
	FLANGE
	UNION
	SHOCK ARRESTOR
	THERMOMETER
	FLOOR DRAIN
	FLOOR CLEAN OUT (FCO)
	WALL CLEAN OUT (WCO)
	EXPANSION TANK
	PUMP
M	WATER METER
R	GAS PRESSURE REGULATOR
	FLOOR SINK
	RECIRCULATION PUMP
	CONNECT TO EXISTING (CX)
	POINT OF DISCONNECT (POD)

DRAWING INDEX

SHEET NO.	NAME
P001	PLUMBING NOTES, ABBREVIATIONS, & LEGEND
P002	PLUMBING SPECIFICATIONS
P100	DOMESTIC WATER PIPING FIRST & SECOND FLOOR PLAN
P200	SANITARY & VENT PIPING FIRST & SECOND PLAN
P300	PLUMBING RISER
P400	PLUMBING SCHEDULES

APPLICABLE CODES (CHARLES COUNTY, MD)

2021	INTERNATIONAL BUILDING CODE (IBC)
2021	INTERNATIONAL EXISTING BUILDING CODE (IEBC)
2021	INTERNATIONAL RESIDENTIAL CODE (IRC)
2020	NATIONAL ELECTRICAL CODE (NFPA-70)
2021	INTERNATIONAL FUEL GAS CODE (IFGC)
2021	INTERNATIONAL MECHANICAL CODE (IMC)
2021	INTERNATIONAL PLUMBING CODE (IPC)
2021	INTERNATIONAL ENERGY CONSERVATION CODE
2021	INTERNATIONAL FIRE CODE (IFC) CH.12-13, SECTION 312

CODE & PLANS REVIEW

IT IS THE CONTRACTOR'S RESPONSIBILITY TO REVIEW THESE CONSTRUCTION DOCUMENTS WITH THE LOCAL INSPECTORS FOR THEIR COMMENT AND APPROVAL BEFORE STARTING WORK. CONTACT ENGINEER WITH ANY ISSUES RAISED BY THE INSPECTOR.

STATE OF MARYLAND · SAMIN ABRAMSON · NO. 39052 · PROFESSIONAL ENGINEER

"I certify that these documents were prepared or approved by me, and that I am a duly licensed Engineer in the State of Maryland, License Number 39052, Expiration Date 12/23/2026."

MEP Engineer
Abramson Engineering
3655-B Old Court Rd, Suite 24
Baltimore, MD 21208
(410) 259-9461

REVISIONS
- 3/30/2026 PERMIT SET

RENOVATION OF UNIVERSITY OF MARYLAND
MEDICAL CENTER OFFICE BUILDING
616 CHARLES STREET
LA PLATA, MARYLAND 20646

R.L. LITTEN & ASSOCIATES, ARCHITECTS, LLC
300 CHARLES STREET, SUITE 4
P.O. BOX 1920, LAPLATA, MD 20646 (301) 934-1471

DRAWN BY: AT
CHK'D BY: SA
PROJECT NO: 25-420

P001

PLUMBING SPECIFICATIONS

22-0503 - ACCESS FOR PLUMBING PIPING AND EQUIPMENT

1. ALL EQUIPMENT SHALL BE INSTALLED IN SUCH A WAY THAT ALL COMPONENTS REQUIRING ACCESS ARE SO LOCATED AND INSTALLED THAT THEY MAY BE SERVICED, RESET, REPLACED, RE-CALIBRATED, ETC., BY SERVICE TECHNICIANS IN ACCORDANCE WITH THE MANUFACTURER'S RECOMMENDATIONS. IF ANY EQUIPMENT OR COMPONENTS ARE LOCATED IN SUCH A POSITION THAT THIS CONTRACTOR CANNOT COMPLY WITH THE ABOVE, THE CONTRACTOR SHALL NOTIFY THE ENGINEER IN WRITING BEFORE EQUIPMENT IS INSTALLED.
2. INSTALL ACCESS DOORS, PANELS, ETC. ON ALL EQUIPMENT AND DEVICES REQUIRING ACCESS FOR ADJUSTMENT AND SERVICE WHICH WILL BE CONCEALED BEHIND WALLS OR ABOVE HARD CEILINGS AND PLACE HIGHLY VISIBLE TAGS STATING "ACCESS REQUIRED". ACCESS DOORS PLACED IN FIRE RATED PARTITIONS SHALL HAVE RATING EQUAL OR GREATER TO THE PARTITION. CONSULT ARCHITECT FOR PANEL FINISH.
3. ACCESS DOOR/PANELS SHALL BE MINIMUM OF 16"X16" OR LARGER TO ALLOW FOR REQUIRED ADJUSTMENTS TO THE EQUIPMENT. DOORS SHALL BE FLUSH WITH ADJACENT SURFACE. CONSULT ARCHITECT FOR MATERIAL AND FINISH FOR EACH DOOR LOCATION. LOCKS SHALL BE FLUSH SCREWDRIVER TYPE WITH STEEL CAMS.
4. ACCESS PANELS ARE NOT REQUIRED IN LIFT OUT TILE CEILINGS.

22-504- PLUMBING DEMOLITION

1. PLUMBING SYSTEMS IN AREAS OUTSIDE SCOPE OF WORK SHALL ALWAYS REMAIN IN OPERATION DURING CONSTRUCTION.
2. DEMOLITION SHALL BE DONE IN A MANNER SO AS NOT TO DAMAGE ADJACENT WORK AND NOT AFFECT THE OPERATION OF SYSTEMS TO REMAIN IN USE. ANY ITEM TO REMAIN THAT IS DAMAGED BY THE CONTRACTOR SHALL BE REPLACED AND/OR REPAIRED AT THE CONTRACTOR'S EXPENSE.
3. ALL OPEN-ENDED PIPING AND DUCTWORK THAT IS TO REMAIN SHALL BE CAPPED AND PROPERLY SECURED.
4. IN AREA OF WORK, REMOVE ALL UNUSED AND ABANDONED PLUMBING EQUIPMENT AND PIPING IN DEMOLISHED WALLS AND ABOVE CEILING SPACES. DO NOT LEAVE ABANDONED IN PLACE UNLESS OTHERWISE NOTED.
5. ALL ELECTRICAL DEVICES, WIRING, CONDUIT, ETC., RELATED TO DEMOLISHED EQUIPMENT/SYSTEMS SHALL BE REMOVED. WIRING SHALL BE DISCONNECTED AT CIRCUIT BREAKERS, REMOVED AND BREAKERS MARKED "SPARE".
6. ALL ASBESTOS REMOVAL WILL BE HANDLED BY THE OWNER AND IS NOT A PART OF THIS WORK.
7. THE BUILDING OWNER RESERVES THE RIGHT TO HAVE SOME OF THE REMOVED MATERIALS STORED ON SITE. THE CONTRACTOR IS RESPONSIBLE FOR COORDINATING, IN CONJUNCTION WITH THE BUILDING OWNER, THE LIST OF WHAT IS TO BE SALVAGED.

22-0505 - EQUIPMENT CONNECTIONS FOR PLUMBING

1. PROVIDE VALVED WATER AND/OR GAS CONNECTION FOR EQUIPMENT AND INCLUDE ACCESSORIES REQUIRED BY CODE, DRAWINGS AND MANUFACTURER'S INSTALLATION INSTRUCTIONS.
2. FULLY COORDINATE WITH LAB EQUIPMENT, POOL EQUIPMENT, KITCHEN EQUIPMENT, AND LAUNDRY EQUIPMENT SUPPLIERS AND CONFIRM ALL ROUGH-IN REQUIREMENTS PRIOR TO STARTING WORK
3. UNIONS OR COMPANION FLANGES SHALL BE INSTALLED IN ALL CONNECTIONS TO EQUIPMENT, VALVES, EQUIPMENT ETC. SO AS TO PERMIT THE REMOVAL OF THE EQUIPMENT AND SPECIALTIES FOR SERVICING.

22-0506 - CURBS AND FLASHING FOR PLUMBING PIPING AND EQUIPMENT

1. ROOF MOUNTED EQUIPMENT SHALL BE PROVIDED WITH ROOF CURBS, MOUNTING BASES, VIBRATION ISOLATION, FLASHING, COUNTER FLASHING, AND OTHER OPTIONS AS REQUIRED FOR SATISFACTORY INSTALLATION COORDINATED WITH ROOF MATERIALS, MANUFACTURER'S SPECIFICATIONS, AND LOCATION.

22-0507 - FIRESTOPPING

1. ALL PENETRATIONS THROUGH FIRE RATED WALLS ASSOCIATED WITH THE INSTALLATION SHALL BE SLEEVED AND FIRE-STOPPED USING A UL APPROVED METHOD. UL APPROVED METHOD SHALL MEET OR EXCEED FIRE RATING OF STRUCTURE BEING PENETRATED. REFERENCE ARCHITECTURAL PLANS FOR FIRE RATED STRUCTURES. IF SHOWN, REFERENCE ARCHITECTURAL, MECHANICAL AND ELECTRICAL DRAWINGS FOR PENETRATION DETAILS.
2. ALL OPENINGS THROUGH FIRE RATED WALLS, FLOORS, AND/OR ROOFS FOR, PIPING, CONDUIT, ETC., SHALL BE FIRE SEALED WITH A CALCIUM SALICATE, SILICONE "RTV" FOAM, "3M" FIRE RATED SEALANTS, HILTI FIRESTOP SYSTEMS, OR APPROVED EQUAL TO MAINTAIN THE INTENDED FIRE RATING AND ASSOCIATED UL RATINGS AS RECOMMENDED BY THE ARCHITECT AND/OR SEALANT MANUFACTURER.
3. ALL FIRE STOPPING SEALANTS SHALL BE THIXOTROPIC SO AS NOT SO SLUMP OR SAG AND SHALL BE TROWELABLE. FIRE STOPPING SEALANTS SHALL BE INTUMESCENT AND SHALL BE FREE OF ASBESTOS, HALOGENS, AND VOLATILE SOLVENTS.
4. FIRE STOPPING MATERIALS SHALL BE CLASSIFIED IN THE UNDERWRITERS LABORATORIES (UL) FIRE RESISTANCE DIRECTORY OR LISTED IN THE WARNOCK HERSEY INTERNATIONAL DIRECTORY.

22-0516 - EXPANSION FITTINGS AND LOOPS FOR PLUMBING PIPING

1. INSTALL PIPING SYSTEM TO PERMIT FEE MOVEMENT FOR EXPANSION.
2. EXPANSION LOOPS AND ANCHORS SHALL BE PROVIDED ON ALL PIPING SYSTEMS WHICH CROSS BUILDING EXPANSION JOINTS AND ALL HORIZONTAL PIPING LENGTHS EXCEEDING 100 FT. OR EACH PORTION THEREOF.

22-0517 - SLEEVES FOR PLUMBING PIPING

1. PROVIDE STANDARD IRON PIPE SIZE STEEL SLEEVES FOR ALL PIPING PASSING THROUGH CONCRETE SLABS AND MASONRY WALLS. ALL SLEEVES SHALL BE SET BEFORE CONCRETE IS POURED. HOLES REQUIRED IN MASONRY SHALL BE MADE WITH CORE DRILLS IN A MANNER APPROVED BY THE ENGINEER.
2. SLEEVES FOR PIPES THROUGH WALLS AND FLOORS SHALL BE OF SUFFICIENT SIZE TO PERMIT THE INSULATION, WHERE SPECIFIED, TO CONTINUE THROUGH THE SLEEVES. SLEEVES THROUGH FLOORS SHALL BE FLUSH WITH THE UNDERSIDE OF THE SLAB AND EXTEND 3/4" ABOVE FINISH FLOOR IN WET AREAS ONLY. PROJECTING SLEEVES SHALL BE PROVIDED WITH ANCHORS TO PREVENT THEM FROM BEING LOOSENED AND KNOCKED DOWN IN THE FLOOR CONSTRUCTION. THE ANNULAR SPACE BETWEEN PIPE AND ALL SLEEVES SHALL BE CAULKED WITH POLYSULFIDE CAULKING COMPOUND. THE ANNULAR SPACE SHALL NOT BE LARGER THAN 1/2" FOR ALL PIPES.
3. UNUSED SLEEVES SHALL BE PLUGGED AND FINISHED TO MATCH ADJOINING SURFACE.

22-0518 - ESCUTCHEONS FOR PLUMBING PIPING

1. ESCUTCHEON PLATES SHALL BE USED TO CONCEAL SLEEVE OPENINGS AND OPENINGS IN MASONRY WALLS. CEILING AND WALL PLATES SHALL BE CHROME PLATED, PROPERLY SECURED IN PLACE. FLOOR PLATES SHALL BE CUP TYPE, SIMILAR TO GRINNELL NO. 400. AT THE CONTRACTOR'S OPTION, SPLIT TYPE ESCUTCHEONS EQUAL IN QUALITY TO ONE-PIECE TYPE MAY BE USED.

22-0519 - METERS AND GAGES FOR PLUMBING PIPING

1. THERMOMETERS SHALL BE INDUSTRIAL GRADE, ANGLE TYPE, ACCURATE TO WITHIN ±1% OF THE RANGE SPAN, BAKED ENAMEL FINISH, BLUE READING ORGANIC LIQUID TUBE, GLASS OR CLEAR ACRYLIC PLASTIC WINDOW, DUST AND MOISTURE TIGHT. SCALE SIZE SHALL BE 9 INCHES. GRADUATIONS SHALL BE TO THE SCALE SHOWN ON THE DRAWINGS OR OF A SCALE SO THAT THE NORMAL WORKING TEMPERATURE OF THE SYSTEM IS NEAR THE MID-POINT OF THE SCALE. PROVIDE COCK WITH EACH THERMOMETER TO ALLOW FOR GAGE ISOLATION.
2. PRESSURE GAGES SHALL BE ACCURATE TO WITHIN ±1% OF THE RANGE SPAN SILVER BRAZED BRONZE BOURDON-TUBE SYSTEM, BRONZE MOVEMENT, ALUMINUM DIAL WITH WHITE BACKGROUND, BLACK GRADUATIONS AND NUMERALS AND ADJUSTABLE POINTER, BOTTOM CONNECTED. DIAL DIMETER SHALL BE 6". GRADUATIONS SHALL BE TO SCALE SHOWN OR SO POINTER IS NEARLY STRAIGHT UP AT NORMAL WORKING PRESSURE. GAGES SHALL BE STRAIGHT PRESSURE TYPE, EXCEPT GAGES ON SUCTION SIDE OF PUMPS AND INLET SIDE OF SUCTION STRAINERS SHALL BE COMPOUND TYPE. PROVIDE COCK WITH EACH GAGE TO ALLOW FOR GAGE ISOLATION.

22-0523- VALVES FOR PLUMBING PIPING

1. ALL VALVES SHALL BE LINE SIZE. PROVIDE STEM EXTENSIONS ON VALVES WHERE PIPE INSULATION AFFECTS THE OPERATION OF THE VALVE HANDLE. VALVES INSTALLED IN DOMESTIC WATER PIPING SHALL BE LEAD FREE AND AWWA RATED FOR POTABLE WATER USE.
2. DOMESTIC WATER ½" - 2": ALL VALVES USED FOR SHUT OFF DUTY SHALL BE TWO PIECE FULL PORT (FP) LEAD FREE VALVES WITH BRASS OR BRONZE VALVE BODY WITH THREADED END CONNECTIONS, SOLID TUNNEL BORE 316 STAINLESS STEEL BALL AND STEM, MODIFIED TEFLON DOUBLE SEAL SEATS AND TEFLON SEALS, AND VALVE HANDLE. VALVE MODEL NUMBERS SHALL BE AS LISTED BELOW:
   a. APOLLO: 77FLF-140* SERIES, BRASS BODY. (FP)
   b. MILWAUKEE: UPBA400S* SERIES, BRONZE BODY. (FP)
   c. WATTS: LFB6080G2-SS*, BRASS BODY. (FP)

22-0529 - HANGERS AND SUPPORTS

3. SUPPORT ALL PIPING FROM STRUCTURE WITH CLEVIS HANGERS OR TRAPEZE SUPPORTS AT ALL CHANGES OF DIRECTION OF PIPES AND AT THE FOLLOWING MAXIMUM SPACING:

	1-1/4" AND SMALLER	1-1/2" AND LARGER
COPPER	6'	10'
	1" AND SMALLER	1-1/4" AND LARGER
STEEL	6'	12'
CAST IRON	5'	5'
CPVC	3'	4'
PVC	4'	4'

4. HANGERS FOR INSULATED PIPING SHALL BE OF SUFFICIENT SIZE TO INCLUDE THE PIPE INSULATION WITHIN THE HANGER. FURNISH AND INSTALL INSUL-SHIELD, MULTI-PURPOSE PIPE SADDLES AS MANUFACTURED BY INSUL-COUSTIC CORP. AT EACH HANGER AS PIPE IS INSTALLED. THE THICKNESS OF PRESS-GLASS SUPPORT SEGMENT SHALL BE EQUAL TO THE THICKNESS OF THE ADJOINING INSULATION WHEN LOAD IS APPLIED. OTHER SADDLE TYPE SUPPORTS MAY BE SUBMITTED FOR APPROVAL.
5. PIPE STANDS SHALL BE LIMITED TO PIPING THAT IS 48-INCHES OR LESS ABOVE THE FLOOR.
6. VERTICAL PIPING, INCLUDING DOWNSPOUTS, SOIL, WASTE AND VENT STACKS SHALL BE SUPPORTED AT FLOOR WITH EXTENSION PIPE CLAMPS, SIMILAR TO B-LINE B3373 FOR IRON AND STEEL PIPE, FIG. B3373 CT FOR COPPER PIPE.
7. EXTERIOR PIPING SHALL BE MOUNTED 3" (MIN) ABOVE GRADE OR ROOF SURFACE. HORIZONTAL ROOF PIPING SHALL BE SUPPORTED WITH WEATHER AND UV RESISTANT SYSTEM APPROVED FOR ROOFING.
8. SPACE SUPPORTS ON EITHER SIDE OF VALVES TO REDUCE STRAIN AND PROVIDE SUFFICIENT SUPPORT.

22-0548 - VIBRATION CONTROL SUPPORTS FOR PLUMBING

1. ALL EQUIPMENT SHALL BE MOUNTED WITH VIBRATION ISOLATORS TO PREVENT VIBRATION AND SOUND TRANSMISSION TO THE BUILDING.
2. SELECT UNITS IN ACCORDANCE WITH THE WEIGHT DISTRIBUTION OF THE EQUIPMENT, SO AS TO PRODUCE REASONABLY UNIFORM DEFLECTION. DEFLECTIONS SHALL BE AS SPECIFIED.
3. NOISE AND VIBRATION CONTROL. MOVING OR ROTATING EQUIPMENT OR MACHINERY WHERE REQUIRED SHALL BE MOUNTED ON OR WITH VIBRATION ELIMINATORS TO PREVENT OBJECTIONABLE TRANSMISSION OF VIBRATION INTO OR THROUGH THE BUILDING STRUCTURE AND TO ACHIEVE NOISE LEVELS NOT EXCEEDING NC 35 IN OFFICES, NC 30 IN CLASSROOMS AND NC 25 IN RESIDENTIAL AREAS. EQUIPMENT NOISE EMITTED TO THE EXTERIOR SHALL NOT EXCEED 45 DBA. CONTRACTOR MUST ANALYZE NOISE PRODUCED BY EQUIPMENT AND ATTENUATION OF ROOM AND WALLS TO DETERMINE THAT THESE CRITERIA WILL BE MET.
4. ALL EQUIPMENT INSTALLED BY CONTRACTOR SHALL BE PROVIDED WITH VIBRATION ISOLATORS, SOUND TRAPS, DUCT LINING, ACOUSTIC HOUSINGS, ACOUSTICAL LOUVERS AND OTHER NOISE AND VIBRATION CONTROL APPARATUS REQUIRED TO LIMIT INTRUSION INTO ADJACENT SPACES ACCORDINGLY.

22-0553 - IDENTIFICATION FOR PLUMBING

1. ALL EQUIPMENT, PIPING, AND VALVES SHALL BE IDENTIFIED WITH PERMANENT AND DURABLE LABELS. FOR EQUIPMENT, PROVIDE LAMACOID PLASTIC LABEL PERMANENTLY AFFIXED IN A READILY VISIBLE LOCATION. AN ACCEPTABLE SUBSTITUTE FOR INLINE PUMPS IS A CHAIN-HUNG TAG IDENTIFYING THE EQUIPMENT NUMBER AND ITS SERVICE AREA. FOR PIPES USE STANDARD COLOR-CODED BANDS EVERY 20 FEET IDENTIFYING SERVICE AND SPECIFIC AREA OF THE BUILDING SERVED.
2. ALL VALVES SHALL HAVE THEIR NORMAL OPERATING POSITION IDENTIFIED SUCH AS "NORMALLY OPEN" OR "NORMALLY CLOSED".
3. WHEN EQUIPMENT IS INSTALLED ABOVE A CEILING GRID, MARK THE LOCATION OF EQUIPMENT, VALVES, DAMPERS, FILTERS, ETC. ON GRID WITH COMPUTER PRINTED LABELS.

22-0719 - PLUMBING PIPING INSULATION

1. INSULATE HOT, CHILLED, COLD WATER, STEAM, AND CONDENSATE PIPING WITH RIGID PRE-MOLDED FIBERGLASS OR ELASTOMERIC INSULATION, SEE TABLE BELOW FOR THICKNESS. INSULATION SHALL HAVE A MAXIMUM CONDUCTIVITY K VALUE OF 0.25 BTU/HR-FT2-°F AT 75°F MEAN TEMPERATURE.

INSULATION THICKNESS TABLE	NOMINAL PIPE SIZE		
	≤1"	1" TO <1 ½"	1½" TO <4"
FLUID OPERATING RANGE	INSULATION THICKNESS		
141-200°F	1.5"	1.5"	2.0"
105-140°F	1"	1"	1.5"
40-60°F	0.5"	0.5"	1.5"
< 40°F	0.5"	1"	1.5"

2. ALL INSULATION SHALL BE INSTALLED OVER CLEAN, DRY SURFACES, INSULATION MUST BE DRY AND IN GOOD CONDITION. WET OR DAMAGED INSULATION WILL NOT BE ACCEPTABLE. NO INSULATION SHALL BE APPLIED PRIOR TO PRESSURE TEST COMPLETION OF THE RESPECTIVE PIPING SYSTEM.
3. INSULATION SHALL HAVE A FLAME SPREAD RATING OF NOT MORE THAN 25 AND A SMOKE DEVELOPED RATING OF NO HIGHER THAN 50 WHEN TESTED IN ACCORDANCE WITH ASTM C-411, OR AS REQUIRED BY LOCAL CODES.
4. ALL INSULATION ENDS SHALL BE TAPERED AND SEALED REGARDLESS OF SERVICES.
5. ALL FLEXIBLE ELASTOMERIC INSULATION SHALL HAVE ALL FITTINGS, BUTT ENDS, AND SEAMS SEALED WITH VAPOR BARRIER ADHESIVE.
6. PROVIDE REMOVABLE INSULATION SECTIONS TO COVER PARTS OF EQUIPMENT WHICH MUST BE OPENED PERIODICALLY FOR MAINTENANCE INCLUDING METAL VESSEL COVERS, FASTENERS, FLANGES, CHILLED WATER PUMPS, FRAMES, AND ACCESSORIES.
7. PROVIDE CONTINUOUS VAPOR RETARDER. SEAL VAPOR RETARDER WITH BRUSH ON MASTIC AT ALL JOINTS.
8. INSULATION SHALL BE INSTALLED CONTINUOUS THROUGH SUPPORT POINTS. INSULATION MAY END AT COMPONENTS THAT PROJECT MORE THAN 6" FROM WETTED SURFACE.
9. VALVES AND OTHER PIPING APPURTENANCES SHALL BE INSULATED WITH SYSTEMS HAVING REMOVABLE COVERS FOR USE AND SERVICE.
10. ALL PIPE INSULATION SHALL BE INSTALLED WITH JOINTS BUTTED FIRMLY TOGETHER. ALL VALVES AND FITTINGS SHALL BE INSULATED USING MITERED SECTIONS OF INSULATION EQUAL IN DENSITY AND THICKNESS TO THE ADJOINING INSULATION, OR WITH AN INSULATION CEMENT EQUAL IN THICKNESS TO THE ADJOINING INSULATION OR PREMOLDED INSULATED FITTINGS. THE INSULATION APPLIED TO THE VALVES AND FITTINGS SHALL BE COVERED WITH THE SAME TYPE OF COVERING AS USED ON THE PIPE INSULATION. NO STAPLES.

22-1116 - DOMESTIC WATER PIPING

1. DOMESTIC WATER PIPING SHALL BE ONE OF THE FOLLOWING:
   a. TYPE "L" HARD COPPER ASTM B 88-832 WITH WROUGHT COPPER FITTINGS ASTM B 16.22 1980 AND NON-LEAD OR ANTIMONY SOLDER JOINTS. 4" AND SMALLER, ABOVE GRADE.
   b. PRE-INSULATED PEX-A AS MANUFACTURED BY UPONOR, WITH EXPANDABLE TYPE FITTINGS. 2" AND SMALLER. PEX SHALL NOT BE USED IN PLENUM RATED AREAS.
   c. CPVC, SCH 40. SOCKET FITTINGS AND SOLVENT CEMENT JOINTS. 2" AND SMALLER ABOVE GROUND. CPVC SHALL NOT BE USED IN PLENUM RATED AREAS.
   d. TYPE 'K' SOFT COPPER WITHOUT JOINTS BELOW GRADE.
2. ALL DOMESTIC WATER PIPING, FITTINGS, AND OTHER COMPONENTS SHALL BE LEAD FREE AND SUITABLE FOR POTABLE WATER.
3. INSTALL WATER SUPPLY PIPES SO THAT NO PIPE JOINTS ARE UNDER FLOOR SLAB. ALL JOINTS SHALL BE ABOVE THE FLOOR IN ACCESSIBLE WALLS.
4. PLUMBING CONTRACTOR SHALL INSTALL ALL DOMESTIC HOT AND COLD WATER PIPING LOCATED IN EXTERIOR WALLS AND CEILING ON HEATED SIDE OF THE INSULATION.
5. CLEAN AND DISINFECT POTABLE WATER PIPING AFTER ALL PIPES, COMPONENTS, VALVES, AND FIXTURES ARE INSTALLED AND REQUIRED TESTING HAVE BEEN COMPLETED AND APPROVED. DISINFECT IN ACCORDANCE WITH AWWA C651 OR AWWA C652 GUIDELINES.

22-1119 - DOMESTIC WATER PIPING SPECIALTIES

1. PROVIDE PRESSURE REDUCING VALVE (PRV) STATIONS ON THE DOMESTIC HOT AND COLD WATER WHERE WATER PRESSURE EXCEEDS 80 PSI. VALVE STATIONS SHALL INCLUDE HIGH AND LOW FLOW PRV'S INLET/OUTLET GAUGES, SERVICE VALVES AND UNIONS. CONTRACTOR SHALL FIELD PRESSURE TEST (STATIC, AT MAX. WORKING PRESSURE) SYSTEM AND DETERMINE REQUIRED LOCATIONS FOR PRESSURE REDUCING VALVES.
2. REDUCES PRESSURE ZONE BACKFLOW PREVENTION ASSEMBLY - SHALL BE WATTS OR APPROVED EQUAL. ASSEMBLY SHALL BE THE SAME SIZE AS PIPE SIZE. ASSEMBLY SHALL INCLUDE STRAINER, DRAIN LINES, INLET AND OUTLET SHUTOFF VALVES, AND AIR GAP. PRESSURE LOSS ACROSS THE SYSTEM SHALL NOT EXCEED 10 PSI. INSTALL ASSEMBLY IN ACCESSIBLE LOCATION.
3. PRESSURE/TEMPERATURE TEST PLUGS (PETE'S PLUG) - ¼" NPT FITTINGS TO RECEIVE EITHER A TEMPERATURE OR PRESSURE PROBE, 1/8" OD FITTING AND CAPS SHALL BE BRASS WITH VALVE CORE OF NORDEL, RATED AT 400 PSI, 0°F TO 200°F.
4. FLOW METER: BELL & GOSSETT THERMOFLO INDICATOR MODEL TFI
5. INSTALL SHOCK ABSORBERS/WATER HAMMER ARRESTORS TO MEET ALL STATE AND LOCAL CODE REQUIREMENTS. PROVIDE SHOCK ABSORBERS WITH STAINLESS STEEL CASING WITH BELLOWS AT WATER RISER, BATTERIES OF FLUSH VALVES, AUTOMATIC CLOSING DEVICES. PROVIDE VACUUM BREAKERS WITH ANTI-SIPHON OR DOUBLE CHECK WITH RELIEF VALVE.

22-1316 - SANITARY WASTE AND VENT PIPING

1. SANITARY SEWERAGE PING SHALL BE ONE OF THE FOLLOWING:
   a. SERVICE WEIGHT, HUBLESS CAST IRON WITH RUBBER SEALING SLEEVE AND STAINLESS STEEL COUPLING JOINTS WITH STAINLESS STEEL CLAMPS AND BOLTS FOR ABOVE GRADE.
   b. PVC DWV PIPE SHALL BE SCHEDULE 40, ASTM D 1785. FITTINGS SHALL BE PVC, DWV ASTM D 2665.
2. ALL SANITARY PIPING LESS THAN 3" SHALL BE INSTALLED WITH A 1/4" PER FT. AND NOT LESS THAN 1/8" PER FT. FOR PIPING 4" AND LARGER UNLESS NOTED OR INDICATED OTHERWISE.
3. INSTALL PIPING BEGINNING AT LOW POINT, TRUE TO GRADES AND ALIGNMENT INDICATED WITH UNBROKEN CONTINUITY OF INVERT. INSTALL GASKETS, SEALS, SLEEVES, LUBRICANTS AND COUPLINGS ACCORDING TO MANUFACTURER'S WRITTEN INSTRUCTIONS USING LUBRICANTS, SOLVENT-CEMENTS, AND OTHER INSTALLATION REQUIREMENTS AND ACCORDING TO ASTM D 2321. PERFORM HYDROSTATIC TEST.
4. ALL VENT PIPING SHALL BE INSTALLED AS HIGH AS REASONABLY POSSIBLE. ALL SANITARY PIPING SHALL BE INSTALLED BELOW THE SLAB AND AS TIGHT TO THE UNDERSIDE OF THE STRUCTURE AS POSSIBLE.
5. PROVIDE LABELED FLOOR OR WALL CLEANOUTS EVERY 50 FEET CENTER ALONG STRAIGHT RUNS AND AT ALL CHANGES IN DIRECTION, AND AT THE BASE OF EACH VERTICAL STACK. FLOOR CLEANOUTS SHALL BE CAST IRON BODY WITH NICKEL BRONZE TOP, ADJUSTABLE TO FINISHED FLOOR. INSTALL IN Y WITH LONG SWEEP QUARTER BEND FITTINGS. CLEANOUTS SHALL BE PIPE SIZE UP TO 6" IN DIAMETER. PIPES OVER 6" IN DIAMETER SHALL HAVE A 6" CLEANOUT.
6. VENT TERMINALS SHALL BE TERMINATED AT LEAST 12" ABOVE ROOF. EACH VENT TERMINAL SHALL BE MADE WATER TIGHT WITH THE ROOF BY USING SHEET COPPER (8 OUNCES PSF) WITH BASE NOT LESS THAN 16" DIAMETER AND COLLAR FULL HEIGHT OF PIPE OR RUBBER BOOT PIPE FLUSHING. INTERIOR OPENINGS THROUGH WALLS, FLOORS, AND CEILINGS SHALL BE SEALED VERMIN PROOF. ROOFING WORK SHALL BE COMPLETED BY OWNER'S ROOFER OF RECORD SO AS NOT TO VOID THE ROOFING WARRANTY.

22-1319 - SANITARY WASTE PIPING SPECIALTIES

1. INSTALL ALL THREADED CLEANOUT PLUGS WITH PIPE DOPE TO ALLOW EASY REMOVAL IN THE FUTURE.
2. ALL HUB/FLOOR/TRENCH DRAINS AND FLOOR SINKS SHALL BE PROVIDED WITH DEEP SEAL TRAPS.
3. SET TOP RIM OF ALL IN-FLOOR FIXTURES (DRAINS, FLOOR SINKS, CLEAN-OUTS, ETC.) FLUSH WITH FINISHED FLOOR UNLESS DRAWINGS EXPLICITLY SPECIFY OTHERWISE.
4. PROVIDE TRAP PRIMER VALVE FOR ALL DRAINS WHICH REQUIRE A SOURCE OF WATER SUPPLY TO MAINTAIN TRAP SEAL. PRIMER VALVES SHALL BE CONNECTED TO THE NEAREST COLD WATER LINE SERVING A FIXTURE AND IN AN ACCESSIBLE AREA. TRAP PRIMERS SHALL BE IN ACCORDANCE WITH ASSE 1018 AND 1044.

22-4000- PLUMBING FIXTURES AND EQUIPMENT

1. FIXTURES AND EQUIPMENT SHALL BE AS SCHEDULED AND MEET ALL REQUIREMENTS AND PERFORMANCE LISTED IN SCHEDULES. MANUFACTURERS LISTED ARE BASIS OF DESIGN. SUBSTITUTIONS ARE SUBJECT TO OWNER/ENGINEER'S APPROVAL. IT IS THE CONTRACTOR'S RESPONSIBILITY TO RE-EVALUATE ANY SUBSTITUTED EQUIPMENT AND CERTIFY THAT THE SUBSTITUTION IS EQUIVALENT TO BASIS OF DESIGN.
2. MAKE ALL FINAL CONNECTIONS TO FIXTURES AND EQUIPMENT AND PROVIDE REQUIRED FITTINGS AND ADAPTORS AS NECESSARY FOR A COMPLETE OPERABLE SYSTEM. PROVIDE VALVES AND UNIONS AT ALL EQUIPMENT CONNECTIONS TO ALLOW FOR PERMANENT DISCONNECTIONS OF EQUIPMENT FOR REPAIR OR REPLACEMENTS.
3. SEAL WITH CAULKING WHERE PLUMBING FIXTURES JOIN WALLS. PROVIDE CAST IRON FACEPLATE SUPPORTS FOR WALL-MOUNTED FIXTURES.
4. PROVIDE SHUT-OFF VALVES AT ALL FIXTURE AND EQUIPMENT SUPPLIES. ALL EXPOSED FIXTURE CONNECTIONS SHALL BE CHROME PLATED OR STAINLESS STEEL.
5. COORDINATE ELECTRICAL CHARACTERISTICS OF ALL FIXTURES AND EQUIPMENT.

STATE OF MARYLAND · ISAIAH ABRAMSON · No. 39052 · PROFESSIONAL ENGINEER

"I certify that these documents were prepared or approved by me, and that I am a duly licensed Engineer in the State of Maryland, License Number 39052, Expiration Date 12/23/2026."

MEP Engineer
Abramson Engineering
3655-B Old Court Rd, Suite 24
Baltimore, MD 21208
(410) 259-9461

REVISIONS
- 3/30/2026 PERMIT SET

RENOVATION OF UNIVERSITY OF MARYLAND MEDICAL CENTER OFFICE BUILDING
616 CHARLES STREET
LA PLATA, MARYLAND 20646

R.L. LITTEN & ASSOCIATES, ARCHITECTS, LLC
300 CHARLES STREET, SUITE 4
P.O. BOX 1920, LAPLATA, MD 20646 (301) 934-1471

DRAWN BY: AT
CHK'D BY: SA
PROJECT NO: 25-420

P002

GENERAL NOTES

1. CONTRACTOR SHALL FIELD VERIFY EXISTING CONDITIONS PRIOR TO START OF ANY WORK AND ADVISE ENGINEER OF ANY DISCREPANCIES.
2. SANITARY PIPING SHOWN SHALL BE BELOW THE SLAB, VENT PIPING SHALL BE INSTALLED TIGHT TO CEILING ABOVE.
3. SLOPE ALL SANITARY PIPING, 3" AND ABOVE AT ⅛" PER FOOT (MIN), AND 2" AND SMALLER AT ¼" PER FOOT (MIN).

DRAWING NOTES

1. SANITARY PIPING BELOW FLOOR SLAB SLOPED AT MINIMUM 1/8" PER FOOT. ALL 2" SANITARY PIPING BELOW FIRST FLOOR SLAB/GRADE SHALL BE SLOPED AT 1/4" PER FOOT.
2. SANITARY CLEANOUT IN FLOOR (TYPICAL).
3. SANITARY VENT PIPING SUPPORTED FROM STRUCTURE ABOVE CEILING.
4. SANITARY VENT PIPING UP INSIDE/ALONG WALL AND ROUTED ABOVE CEILING AS INDICATED (TYPICAL).

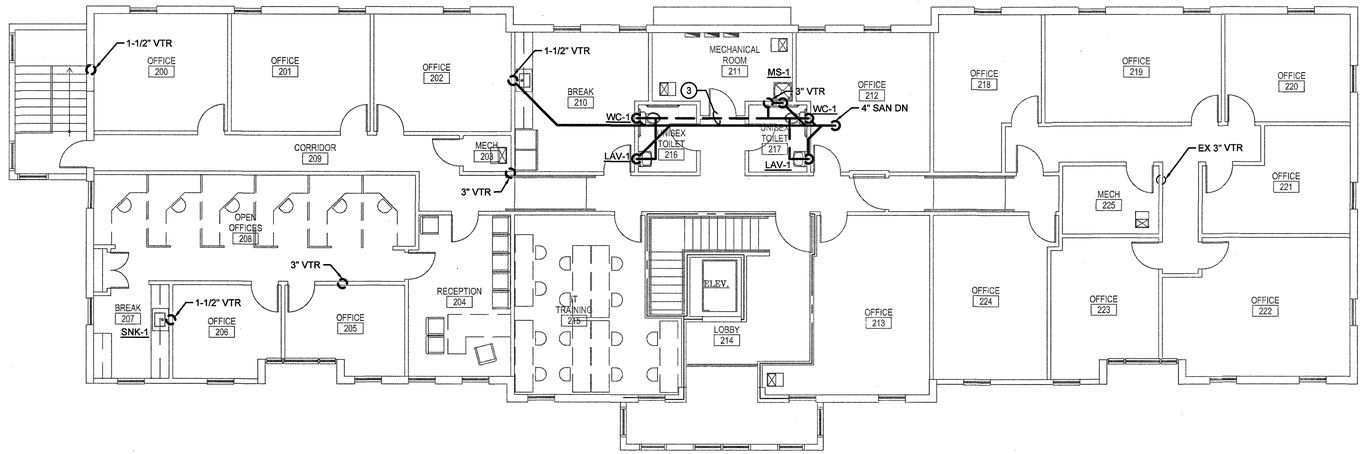

2 SANITARY & VENT PIPING SECOND FLOOR PLAN
SCALE: 1/8" = 1'-0"

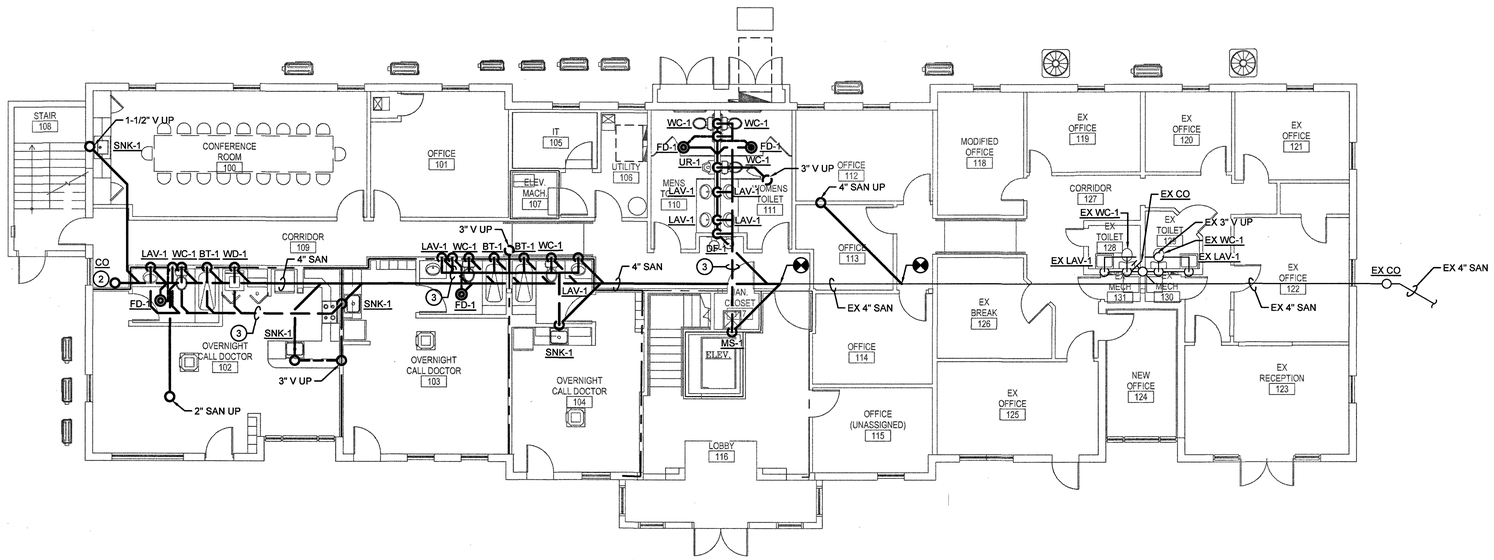

1 SANITARY & VENT PIPING FIRST FLOOR PLAN
SCALE: 1/8" = 1'-0"

GRAPHICAL SCALE
0 4' 8' 16' 24'
1/8"=1'-0"

"I certify that these documents were prepared or approved by me, and that I am a duly licensed Engineer in the State of Maryland, License Number 39052, Expiration Date 12/23/2026."

MEP Engineer
Abramson Engineering
3655-B Old Court Rd, Suite 24
Baltimore, MD 21208
(410) 259-9461

REVISIONS
- 3/30/2026 PERMIT SET

RENOVATION OF UNIVERSITY OF MARYLAND MEDICAL CENTER OFFICE BUILDING

616 CHARLES STREET
LA PLATA, MARYLAND 20646

R.L. LITTEN & ASSOCIATES, ARCHITECTS, LLC
300 CHARLES STREET, SUITE 4
P.O. BOX 1920, LAPLATA, MD 20646 (301) 934-1471

DRAWN BY: AT
CHK'D BY: SA

PROJECT NO: 25-420

P100

GENERAL NOTES

1. CONTRACTOR SHALL FIELD VERIFY EXISTING CONDITIONS PRIOR TO START OF ANY WORK AND ADVISE ENGINEER OF ANY DISCREPANCIES.
2. INSTALL WATER HAMMER ARRESTORS ON THE HOT & COLD SUPPLY FOR ALL LAVATORIES AND SINKS ON THE HIGHEST POINT AT THE END OF EACH BRANCH.
3. HOT WATER PIPING HAS BEEN DESIGNED TO MEET IECC 404.5. INSTALL PIPING AS PER DRAWINGS SUCH THAT HOT WATER TERMINATION POINT TO ALL PUBLIC LAVATORIES ARE WITHIN 24" OF HOT WATER LOOP.
4. EVERY DIRECTLY CONNECTED KITCHEN APPLIANCE, WATER FILTER,BEVERAGE DISPENSER, OVEN SHALL HAVE AN ASSE-1024 BFP.CARBONATED BEVERAGE SYSTEM AND COFFEE MAKER SHALL HAVE AN ASSE-1022 BFP.

DRAWING NOTES

1. EXISTING DOMESTIC WATER PIPING SUPPORTED FROM STRUCTURE TO REMAIN. (TYPICAL)
2. DOMESTIC WATER PIPING SUPPORTED FROM STRUCTURE ABOVE CEILING.
3. DOMESTIC WATER PIPING DOWN INSIDE WALL AND EXTENDED IN CASEWORK TO FIXTURE.
4. DOMESTIC WATER PIPING UP TO SNK-1 ON FLOOR ABOVE.
5. FLOOR MOUNTED ELECTRIC WATER HEATER MOUNTED IN FULL SIZE DRAIN PAN. REFER TO PLUMBING FIXTURE SCHEDULE.

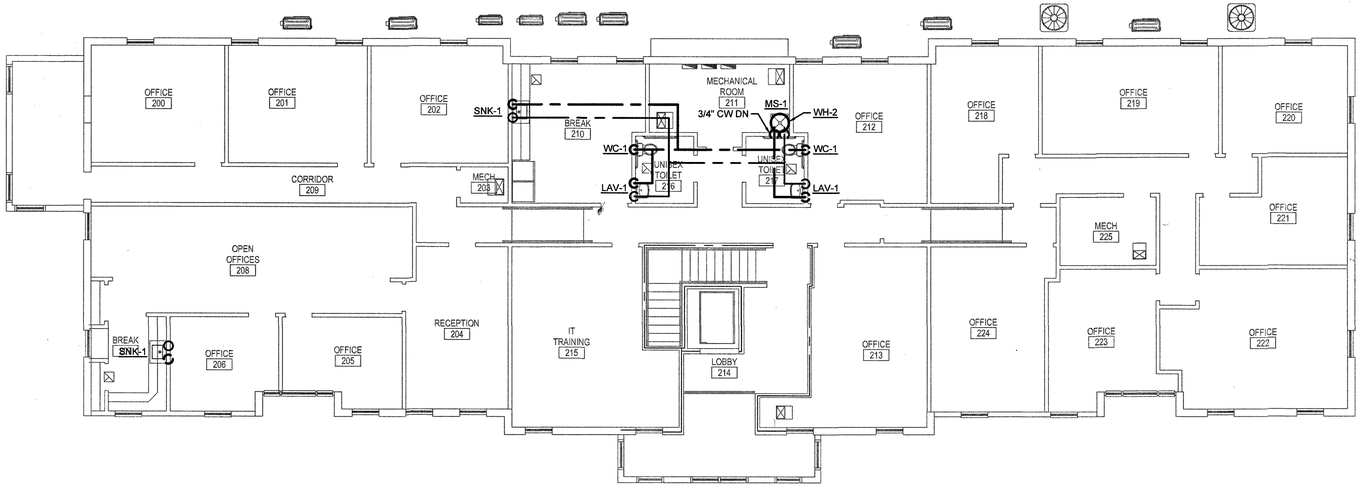

2 DOMESTIC WATER PIPING SECOND FLOOR PLAN
SCALE: 1/8" = 1'-0"

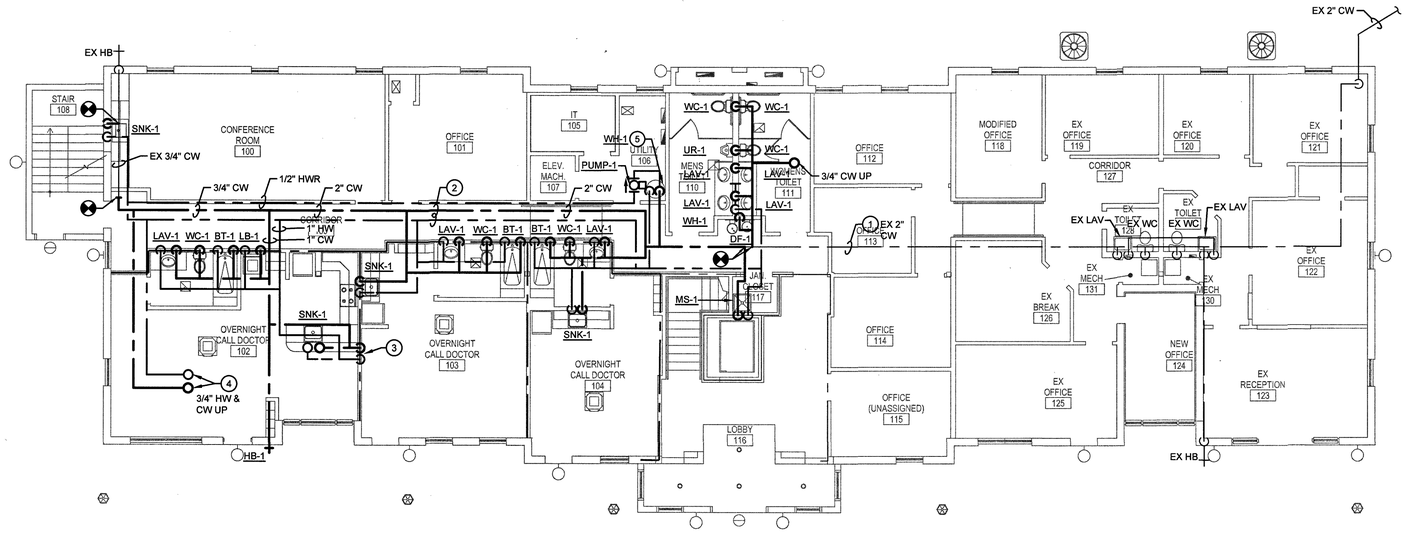

1 DOMESTIC WATER PIPING FIRST FLOOR PLAN
SCALE: 1/8" = 1'-0"

"I certify that these documents were prepared or approved by me, and that I am a duly licensed Engineer in the State of Maryland, License Number 39052, Expiration Date 12/23/2026."

GRAPHICAL SCALE
0 4' 8' 16' 24'
1/8"=1'-0"

MEP Engineer
Abramson Engineering
3655-B Old Court Rd, Suite 24
Baltimore, MD 21208
(410) 259-9461

REVISIONS
- 3/30/2026 PERMIT SET

RENOVATION OF UNIVERSITY OF MARYLAND
MEDICAL CENTER OFFICE BUILDING
616 CHARLES STREET
LA PLATA, MARYLAND 20646

R.L. LITTEN & ASSOCIATES, ARCHITECTS, LLC
300 CHARLES STREET, SUITE 4
P.O. BOX 1920, LAPLATA, MD 20646 (301) 934-1471

DRAWN BY: AT
CHK'D BY: SA
PROJECT NO: 25-420

P200

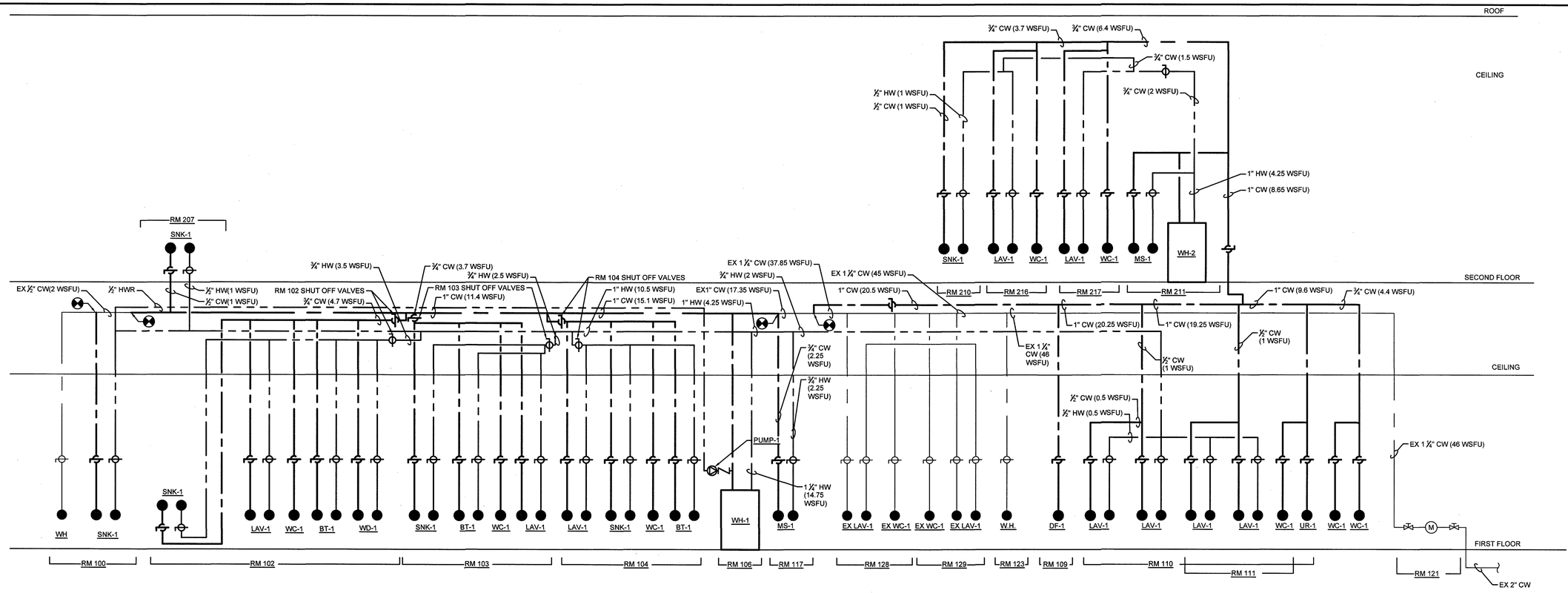

1 PLUMBING DOMESTIC WATER RISER DIAGRAM
SCALE: NTS

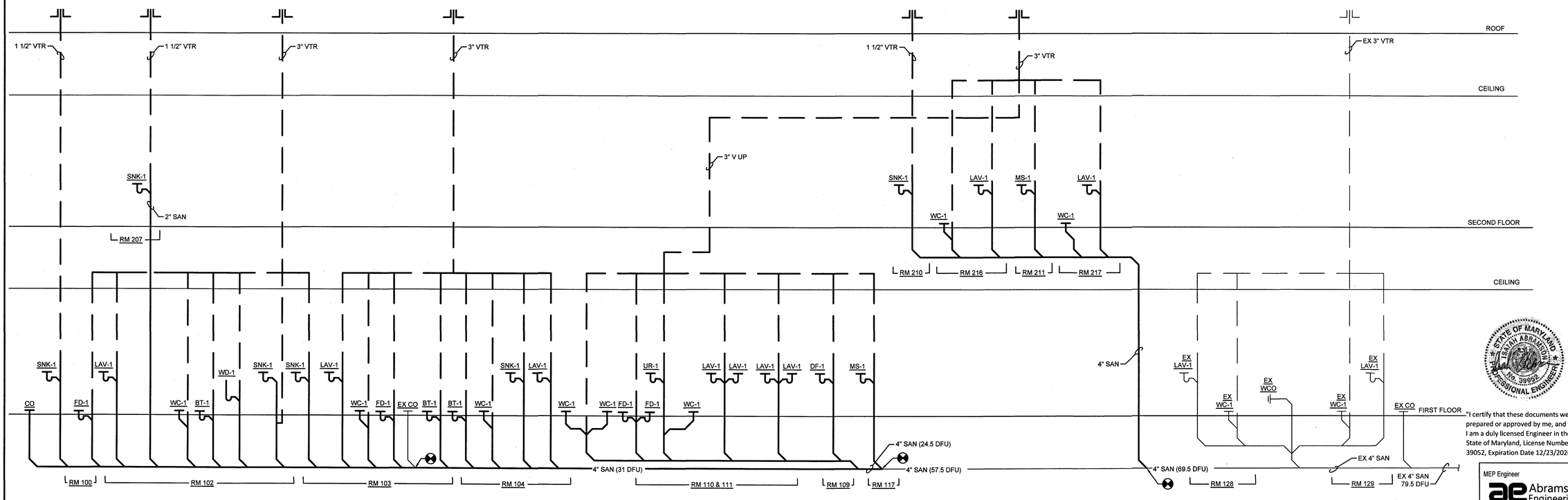

2 PLUMBING SANITARY & VENT RISER DIAGRAM
SCALE: NTS

"I certify that these documents were prepared or approved by me, and that I am a duly licensed Engineer in the State of Maryland, License Number 39052, Expiration Date 12/23/2026."

MEP Engineer
Abramson Engineering
3655-B Old Court Rd, Suite 24
Baltimore, MD 21208
(410) 259-9461

REVISIONS
- 3/30/2026 PERMIT SET

RENOVATION OF UNIVERSITY OF MARYLAND MEDICAL CENTER OFFICE BUILDING

616 CHARLES STREET
LA PLATA, MARYLAND 20646

R.L. LITTEN & ASSOCIATES, ARCHITECTS, LLC
300 CHARLES STREET, SUITE 4
P.O. BOX 1920, LAPLATA, MD 20646 (301) 934-1471

DRAWN BY: AT
CHK'D BY: SA
PROJECT NO: 25-420

P300

PLUMBING FIXTURE SCHEDULE

UNIT NO.	FIXTURE	CW	HW	WASTE	VENT	IGCC FLOW RATE	MANUFACTURER MODEL NO. & SPECIFICATIONS
FCO	CLEAN OUT, FLOOR	-	-	PIPE SIZE	-	-	SIOUX CHIEF; 852 SERIES; ADJUSTABLE, OWNER/ARCHITECT TO CHOOSE FINISH
WCO	CLEAN OUT, WALL	-	-	PIPE SIZE	-	-	SIOUX CHIEF; 870 SERIES, FLAT CLEAN OUT COVER, STAINLESS STEEL
DF-1	DRINKING FOUNTAIN W/ BOTTLE FILLING STATION	1/2"	-	1-1/2"	1-1/2"	0.7 GPM	ELKAY EXS8WSLK W/ EZH20 BOTTLE FILLING STATION; (BI-LEVEL W/ SINGLE BOTTLE FILLER)
FD-1	2" FLOOR DRAIN, ADJUSTABLE	-	-	2"	PER PLAN	-	SIOUX CHIEF; 832-2PSQ
HB-1	DUAL CHECK VALVE WALL HYDRANT W/ INTEGRAL VACUUM BREAKER	3/4"	-	-	-		JAY R SMITH; 5519, GUARDIAN DUAL CHECK VALVE, INTEGRAL VACUUM BREAKER, NON-FREEZE, LOCKABLE
LAV-1	LAVATORY SINK W/ FAUCET	1/2"	1/2"	2"	2"	0.5 GPM	AMERICAN STANDARD; LUCERNE; 0355 VITROUS CHINA WALL HUNG SINK W/ 4" CENTERS. FAUCET; AMERICAN STANDARD MONTERREY M/N 5500175, POLISHED CHROME, ADA COMPLIANT
LB-1	LAUNDRY BOX	1/2"	1/2"	2"	1-1/2"	-	SIOUX CHIEF; OxBox
MS-1	MOP SINK W/ FAUCET	1/2"	1/2"	3"	2"	-	ZURN; Z1996-24, 24"x24" MOLDED HIGH DENSITY COMPOSITE BASIN WITH PVC DRAIN BODY, STAINLESS STEEL STRAINER AND SERVICE FAUCET
MV-1	MIXING VALVE	1/2"	1/2"	-	-	-	WATTS; LFUSG-B UNDER SINK GUARDIAN THERMOSTATIC MIXING VALVE
PUMP-1	HOT WATER RECIRC PUMP (HRW)	-	1/2"	-	-	-	TACO; 006-IFC, W/ INTEGRATED FLOW CHECK. MAX TEMP 220°F. 1/2" SWEAT CONNECTION. , 115V/.52A, CONTROL PUMP WITH AQUASTAT SET TO 120°F
SNK-1	BREAKROOM SINK W/ FAUCET	1/2"	1/2"	2"	-	2.2 GPM	ELKAY; HDU24189F SINGLE BOWL UNDERMOUNT STAINLESS STEEL SINK. FAUCET: PFISTER F-036, Glenfeild 2-Handle Kitchen Faucet With Side Spray
UR-1	URINAL, ADA, 0.5 GPF PISTON MANUAL FLUSHVALVE	1/2"	-	2"	1-1/2"	0.5 GPF	AMERICAN STANDARD: FIXTURE: TOP SPUD - 6590.001, FLUSHOMETER: MANUAL, PISTON - 6045.051
WC-1	WATER CLOSET, ADA, 1.28 GPF GRAVITY-FED TANK & SEAT	3/4"	-	4"	2"	1.28 GPF	AMERICAN STANDARD: BOWL & TANK: CADET EL BOWL 16.5", GRAVITY - 215AB.104, SEAT: 5321.110
WH-1	55 GAL. DOMESTIC ELECTRIC WATER HEATER	3/4"	3/4"	-	-	-	AO SMITH; ENT-55, 21 GPH RECOVERY @ 90° RISE, 6KW, 240V. SIZE: 56" TALL, 24" DIAMETER. WEIGHT 145 LBS.
WH-2	30 GAL. DOMESTIC ELECTRIC WATER HEATER	3/4"	3/4"	-	-	-	AO SMITH; ENLB-30, 30 GAL TANK, 21 GPH RECOVERY @90°F RISE, 4.5KW, 240V SIZE: 30" TALL, 20" DIAMETER WEIGHT 90 LBS.

DOMESTIC WATER SIZING SCHEDULE - IPC TABLE E103.3(2)

FIXTURE TYPE	FIXTURE QTY	SUPPLY FIXTURE UNITS PER FIXTURE			SUPPLY FIXTURE UNITS TOTAL		
		Cold	Hot	Total	Cold	Hot	Total
Bathroom Group (Private, Flush Tank)	3	2.7	1.5	3.6	8.1	4.5	10.8
Bathroom Group (Private, Flush Valve)		6.0	3.0	8.0	0.0	0.0	0.0
Bathtub (Private)		1.0	1.0	1.4	0.0	0.0	0.0
Bathtub (Public)		3.0	3.0	4.0	0.0	0.0	0.0
Bidet (Private)		1.5	1.5	2.0	0.0	0.0	0.0
Combination Fixture (Private)		2.25	2.25	3.0	0.0	0.0	0.0
Dishwashing Machine (Private)		0.0	1.4	1.4	0.0	0.0	0.0
Drinking Fountain	1	0.25	0.0	0.25	0.3	0.0	0.3
Kitchen Sink (Private)	5	1.0	1.0	1.4	5.0	5.0	7.0
Kitchen Sink (Public)	2	3.0	3.0	4.0	6.0	6.0	8.0
Laundry Trays (1 to 3)		1.0	1.0	1.4	0.0	0.0	0.0
Lavatory (Private)	4	0.5	0.5	0.7	2.0	2.0	2.8
Lavatory (Public)	4	1.5	1.5	2.0	6.0	6.0	8.0
Service Sink (MOP SINK)	2	2.25	2.25	3.0	4.5	4.5	6.0
Shower Head (Public)		3.0	3.0	4.0	0.0	0.0	0.0
Shower Head (Private)		1.0	1.0	1.4	0.0	0.0	0.0
Urinal (Public, 1" Flush Valve)		10.0	0.0	10.0	0.0	0.0	0.0
Urinal (Public, ¾" Flush Valve)		5.0	0.0	5.0	0.0	0.0	0.0
Urinal (Public, Flush Tank)	1	3.0	0.0	3.0	3.0	0.0	3.0
Washing Machine (Private, 8lb)	1	1.0	1.0	1.4	1.0	1.0	1.4
Washing Machine (Public, 8lb)		2.25	2.25	3.0	0.0	0.0	0.0
Washing Machine (Public, 15lb)		3.0	3.0	4.0	0.0	0.0	0.0
Water Closet (Private, Flush Valve)		6.0	0.0	6.0	0.0	0.0	0.0
Water Closet (Private, Flush Tank)	4	2.2	0.0	2.2	8.8	0.0	8.8
Water Closet (Public, Flush Valve)		10.0	0.0	10.0	0.0	0.0	0.0
Water Closet (Public, Flush Tank)	3	5.0	0.0	5.0	15.0	0.0	15.0
Water Closet (Public or Private, Flushometer Tank)		2.0	0.0	2.0	0.0	0.0	0.0
				TOTAL	59.7	29.0	71.1
DEMAND IN GPM PER IPC TABLE E103.3(3)							35
MIN SERVICE SIZE TYPE 'L' COPPER SIZE [IN]							2"
VELOCITY AT PIPE SIZE AND FLOW [FPS]							3.5

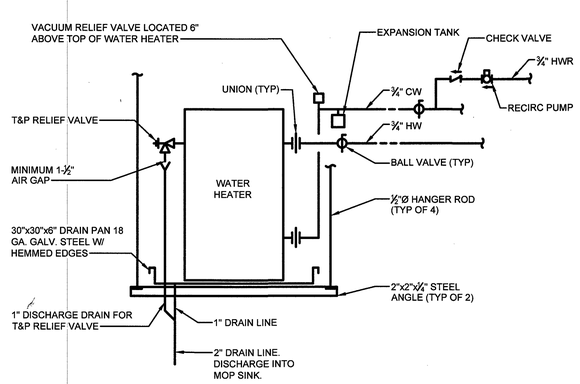

1 ELEVATED WATER HEATER DETAIL
SCALE: NTS

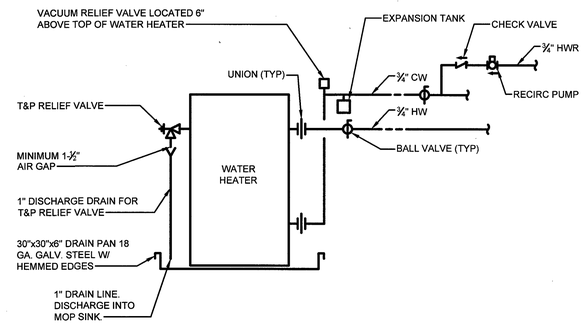

2 WATER HEATER ON FLOOR DETAIL
SCALE: NTS

"I certify that these documents were prepared or approved by me, and that I am a duly licensed Engineer in the State of Maryland, License Number 39052, Expiration Date 12/23/2026."

MEP Engineer
Abramson Engineering
3655-B Old Court Rd, Suite 24
Baltimore, MD 21208
(410) 259-9461

REVISIONS
- 3/30/2026 PERMIT SET

RENOVATION OF UNIVERSITY OF MARYLAND MEDICAL CENTER OFFICE BUILDING
616 CHARLES STREET
LA PLATA, MARYLAND 20646

R.L. LITTEN & ASSOCIATES, ARCHITECTS, LLC
300 CHARLES STREET, SUITE 4
P.O. BOX 1920, LAPLATA, MD 20646 (301) 934-1471

DRAWN BY: AT
CHK'D BY: SA
PROJECT NO: 25-420

P400

SYMBOL LEGEND

SYMBOL	DESCRIPTION
FACP	FIRE ALARM CONTROL PANEL
FAAP	FIRE ALARM ANNUNCIATOR PANEL
MAP	GRAPHIC MAP
DOC	DOCUMENT BOX
F	MANUAL PULL STATION
S	SMOKE DETECTOR, PHOTOTELECTRIC, ADDRESSABLE
SS	SMOKE DETECTOR, 120V W/ BATTERY BACKUP SINGLE STATION. HARD WIRED WITH BATTERY BACKUP AND INTERCONNECTED.
ER	ELEVATOR CALL RELAY MODULE
EH	ELEVATOR FIREMANS HAT RELAY
H/S	HORN/STROBE - WALL OR CEILING MOUNTED (#=CANDELA)
S	STROBE - WALL OR CEILING MOUNTED (#=CANDELA)
LF H	HORN, LOW FREQUENCY
DH	DOOR HOLDERS

ABBREVIATIONS

A	AMPERES
AH	AMP HOURS
AHU	AIR HANDLING UNIT
AWG	AMERICAN WIRE GAUGE
CD	CANDELA RATING
CKT	CIRCUIT
D	DAMPER
DN	DOWN
EMR	ELEVATOR MACHINE ROOM
ELEC	ELECTRICAL
ELEV	ELEVATOR
EOLR	END OF LINE RESISTOR
ETR	EXISTING TO REMAIN
EP	EXPLOSION PROOF
EX	EXISTING
FDC	FIRE DEPARTMENT CONNECTION
FBO	FURNISHED BY OTHERS
FL	FLOOR
MAX	MAXIMUM
MECH	MECHANICAL
MIN	MINIMUM
NAC	NOTIFICATION APPLIANCE CIRCUIT
NIC	NOT IN CONTRACT
PG	PROTECTIVE GUARD
PWR	POWER
RA	RETURN AIR
REL	RELOCATED DEVICE
RM	ROOM
RTU	ROOF TOP UNIT
SA	SUPPLY AIR
SLC	SIGNALING LINE CIRCUIT
SUPV	SUPERVISORY
TRBL	TROUBLE
TYP	TYPICAL
UNO	UNLESS NOTED OTHERWISE
V	VOLT
VAC	VOLTS ALTERNATING CURRENT
VDC	VOLTS DIRECT CURRENT
W	WATTS
WP	WEATHER PROOF

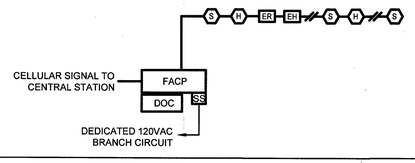

FIRST FLOOR

NOTES:

1. RISER IS SHOWN DIAGRAMMATICALLY. PROVIDE DEVICES AS SHOWN ON FLOOR PLANS AND KEYNOTES. INCLUDE NUMBER OF NAC CIRCUITS AND ADDITION OF FIRE ALARM BOOSTER PANEL IF REQUIRED FOR A WORKING CODE COMPLIANT SYSTEM.

1 FIRE ALARM RISER
SCALE: NTS

FIRE ALARM GENERAL NOTES

1. THE CONTRACTOR SHALL PROVIDE A CODE COMPLIANT FIRE ALARM SYSTEM IN ACCORDANCE WITH ALL ADOPTED CODES AND STANDARDS OF THE JURISDICTION WHERE THE WORK IN TAKING PLACE. INFORMATION INDICATED ON THE DRAWINGS IS STRICTLY FOR THE PURPOSE OF ESTABLISHING A MINIMUM CRITERIA FOR THE FIRE ALARM AND DETECTION SYSTEM.
2. DESIGNER SHALL BE NICET LEVEL III OR IV CERTIFIED IN FIRE ALARM OR REGISTERED FIRE PROTECTION ENGINEER WITH EXPERIENCE DESIGNING FIRE ALARM SYSTEMS IN THE AREA OF THE AUTHORITY HAVING JURISDICTION.
3. THE FIRE ALARM SYSTEM SHALL BE AN INTELLIGENT ADDRESSABLE SYSTEM. CIRCUITS SHALL MEET THE FOLLOWING MINIMUM REQUIREMENTS:
   - INITIATING DEVICE CIRCUITS - CLASS B
   - NOTIFICATION APPLIANCE CIRCUITS - CLASS B
   - SIGNALING LINE CIRCUITS - CLASS B
   - AUXILIARY CIRCUITS - CLASS B
   - SURVIVABILITY LEVEL 0
5. COORDINATE EXACT MOUNTING LOCATIONS OF THE CONTROL PANELS (FACP), AUXILIARY POWER SUPPLIES (FABP), AND DOCUMENTATION CABINET WITH THE GENERAL CONTRACTOR, OWNER, AND ELECTRICAL CONTRACTOR PRIOR TO INSTALLATION.
6. PROVIDE DEDICATED 120VAC CIRCUIT(S) FOR FIRE ALARM EQUIPMENT. LOCATION OF THE BRANCH CIRCUIT SHALL BE PERMANENTLY IDENTIFIED AT THE CONTROL PANEL. THE CIRCUIT DISCONNECTING MEANS SHALL BE RED IN COLOR, MECHANICALLY PROTECTED AGAINST ANY PHYSICAL DAMAGE, AND ACCESSIBLE TO AUTHORIZED PERSONNEL ONLY. WHERE CIRCUIT BREAKER IS THE DISCONNECTING MEANS, IT SHALL HAVE AN APPROVED BREAKER LOCKING DEVICE INSTALLED.
7. THE SYSTEM SHALL OPERATE UNDER SECONDARY POWER IN NORMAL OR TROUBLE CONDITIONS FOR TWENTY-FOUR (24) HOURS AND HAVE SUFFICIENT POWER TO SUPPORT COMPLETE ALARM CONDITION OPERATION FOR A SUBSEQUENT FIVE (5) MINUTES AT MAXIMUM CONNECTED LOAD.
8. PROVIDE ADDRESSABLE FIRE ALARM SYSTEM WITH BATTERY BACKUP, HORN/STROBES, STROBES, MANUAL PULL STATIONS, DETECTORS, DUCT DETECTORS, AND SO FORTH AS REQUIRED BY APPLICABLE BUILDING CODES AND THE LATEST NFPA 72.
9. PROVIDE MONITORING CONNECTIONS TO SPRINKLER WATERFLOW SWITCHES AND CONTROL VALVE TAMPER SWITCHES (SWITCHES ARE BY SPRINKLER CONTRACTOR). COORDINATE NUMBER OF CONNECTIONS WITH THE SPRINKLER CONTRACTOR.
10. NOTIFICATION APPLIANCE CIRCUITS (NAC) SHALL BE DESIGNED WITH A STARTING VOLTAGE OF 20.4VDC (85% OF THE NAMEPLATE VOLTAGE) AND NOT EXCEED A 4.4V DROP.
11. THE AUDIBLE/VISUAL NOTIFICATION APPLIANCES SHALL BE LISTED FOR THE INTENDED APPLICATION. PROVIDE SYNCHRONIZATION OF ALL NOTIFICATION APPLIANCE CIRCUITS.
12. WHERE POSSIBLE, PROVIDE FLUSH MOUNTING OF NOTIFICATION APPLIANCES. WHERE SURFACE-MOUNTED NOTIFICATION APPLIANCES ARE NECESSARY, PROVIDE MANUFACTURES LISTED BACK BOX.
13. ALL AUDIBLE APPLIANCES FOR FIRE ALARM SHALL BE SET TO THE HIGH DBA SETTING AND SHALL SOUND A CODE-3 TEMPORAL PATTERN U.N.O. ALL DEVICES FOR CARBON MONOXIDE SHALL SOUND A CODE-4 TEMPORAL.
14. FACP SHALL HAVE A BUILT IN PHONE LINE DIALER FOR TRANSMISSION TO CENTRAL STATION.
15. COORDINATE EXACT PLACEMENT OF ALL DEVICES AND APPLIANCES WITH THE ARCHITECTURAL PLANS AND GENERAL CONTRACTOR PRIOR TO INSTALLATION TO AVOID CONFLICTS WITH OTHER TRADES.
16. WHERE POSSIBLE, CENTER AND ALIGN ALL CEILING MOUNTED DEVICES.
17. SMOKE DETECTOR SHALL BE LOCATED AT LEAST 3' FROM AIR DIFFUSERS.
18. SMOKE DETECTOR HEADS SHALL NOT BE INSTALLED UNTIL AFTER THE CONSTRUCTION CLEAN-UP OF ALL TRADES IS COMPLETE AND FINAL. DETECTORS THAT HAVE BEEN INSTALLED PRIOR TO FINAL CLEAN UP BY ALL TRADES SHALL BE CLEANED OR REPLACED IN ACCORDANCE WITH NFPA 72.
19. PRIOR TO SUBMITTING AN APPLICATION FOR PERMIT TO THE AHJ, PROVIDE SHOP DRAWINGS, BATTERY CALCULATIONS, AND PRODUCT DATA SHEETS TO THE OWNERS REPRESENTATIVES FOR REVIEW AND COMMENT.

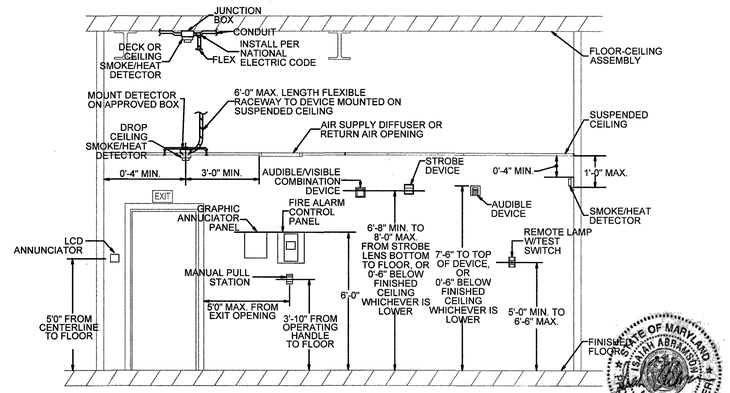

3 GENERAL DEVICE MOUNTING DETAIL

DRAWING INDEX

SHEET NO.	NAME
F001	FIRE ALARM NOTES, MATRIX, RISER, ABBREVIATIONS & LEGENDS
F100	FIRE ALARM PLAN - FIRST FLOOR

APPLICABLE CODES (CHARLES COUNTY)

2021	INTERNATIONAL BUILDING CODE
2021	INTERNATIONAL MECHANICAL CODE
2021	NFPA 1 FIRE CODE
2021	NFPA 101 LIFE SAFETY CODE
2019	NFPA 72 NATIONAL FIRE ALARM SIGNALING CODE
2023	NFPA 70 NATIONAL ELECTRIC CODE

CODE & PLANS REVIEW

IT IS THE CONTRACTOR'S RESPONSIBILITY TO REVIEW THESE CONSTRUCTION DOCUMENTS WITH THE LOCAL AUTHORITY HAVING JURISDICTION (AHJ) FOR THEIR COMMENT AND APPROVAL BEFORE STARTING WORK. CONTACT ENGINEER WITH ANY ISSUES RAISED BY THE AHJ.

STATE OF MARYLAND
ISAIAH ABRAMSON
No. 39052
PROFESSIONAL ENGINEER

"I certify that these documents were prepared or approved by me, and that I am a duly licensed Engineer in the State of Maryland, License Number 39052, Expiration Date 12/23/2026."

MEP Engineer
Abramson Engineering
3655-B Old Court Rd, Suite 24
Baltimore, MD 21208
(410) 259-9461

REVISIONS
- 3/30/2026 PERMIT SET

RENOVATION OF UNIVERSITY OF MARYLAND
MEDICAL CENTER OFFICE BUILDING
616 CHARLES STREET
LA PLATA, MARYLAND 20646

R.L. LITTEN & ASSOCIATES, ARCHITECTS, LLC
300 CHARLES STREET, SUITE 4
P.O. BOX 1920, LAPLATA, MD 20646 (301) 934-1471

DRAWN BY: AT
CHK'D BY: SA
PROJECT NO: 25-420

F001

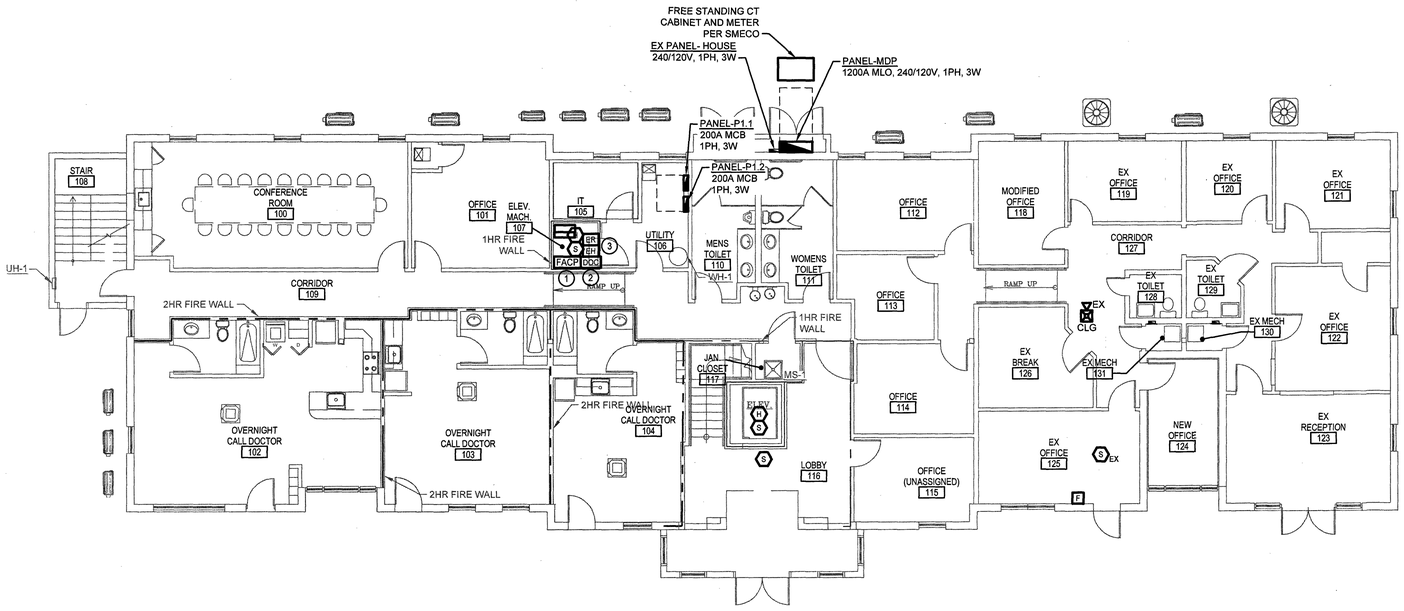

1 FIRST FLOOR PLAN - FIRE ALARM
SCALE: 1/8" = 1'-0"

DRAWING NOTES

1. EXISTING RELOCATED FIRE ALARM CONTROL PANEL STATION.
2. PROVIDE A DOCUMENTATION CABINET ADJACENT TO THE FIRE ALARM CONTROL PANEL TO HOUSE ALL SYSTEM DOCUMENTS IN ACCORDANCE WITH NFPA 72. SYSTEM DOCUMENTS SHALL INCLUDE (AT A MINIMUM) RECORD DRAWINGS, EQUIPMENT DATA SHEETS, SOFTWARE AND FIRMWARE CONTROL DOCUMENTATION. THE DOCUMENTATION CABINET SHALL BE PROMINENTLY LABELED "SYSTEM RECORD DOCUMENTS", AND SHALL BE ACCESSIBLE BY AUTHORIZED PERSONNEL ONLY AND PROTECTED FROM PUBLIC ACCESS.
3. PROVIDE PRIMARY AND ALTERNATE ELEVATOR RECALL AND FIREMANS HAT INDICATION.

GRAPHICAL SCALE
0 4' 8' 16' 24'
1/8"=1'-0"

"I certify that these documents were prepared or approved by me, and that I am a duly licensed Engineer in the State of Maryland, License Number 39052, Expiration Date 12/23/2026."

MEP Engineer
Abramson Engineering
3655-B Old Court Rd, Suite 24
Baltimore, MD 21208
(410) 259-9461

REVISIONS
- 3/30/2026 PERMIT SET

RENOVATION OF UNIVERSITY OF MARYLAND MEDICAL CENTER OFFICE BUILDING

616 CHARLES STREET
LA PLATA, MARYLAND 20646

R.L. LITTEN & ASSOCIATES, ARCHITECTS, LLC
300 CHARLES STREET, SUITE 4
P.O. BOX 1920, LAPLATA, MD 20646 (301) 934-1471

DRAWN BY: AT
CHK'D BY: SA
PROJECT NO: 25-420

F100